1) Radar system architecture

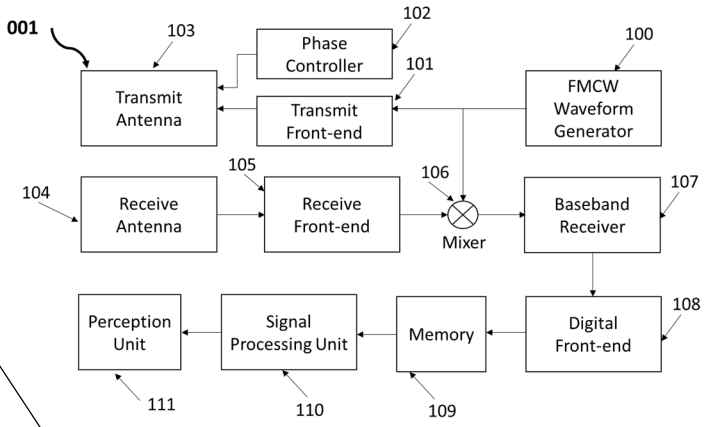

Figure-1: Radar system architecture

2) Transmitting and receiving antenna array

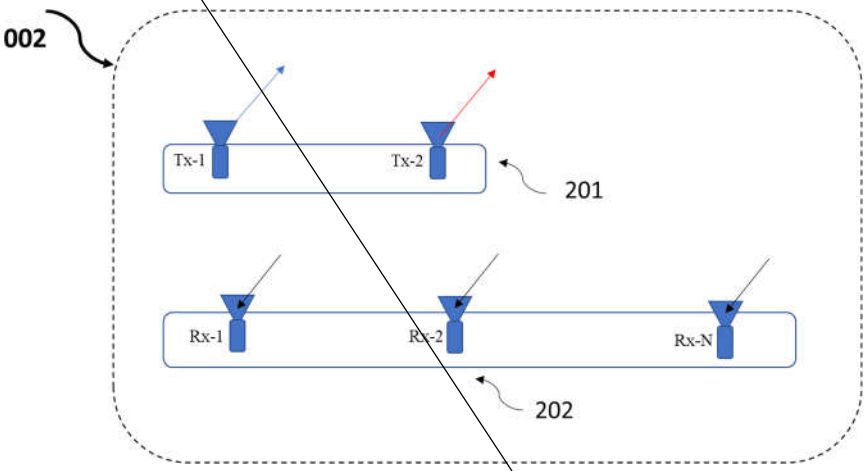

Figure-2: Transmitting and receiving antenna array configuration

3) CDM FMCW waveform scheduling for Doppler ambiguity resolution

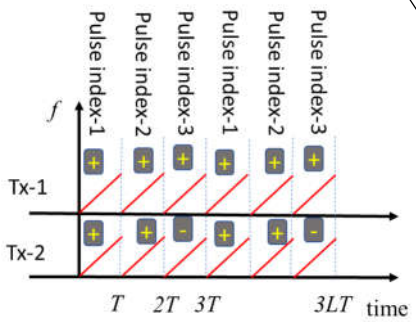

Figure-3 waveform transmit scheme for CDM Doppler ambiguity resolution (illustrated with two Transmit antennas)

4) Figure-4: Overall processing flowchart

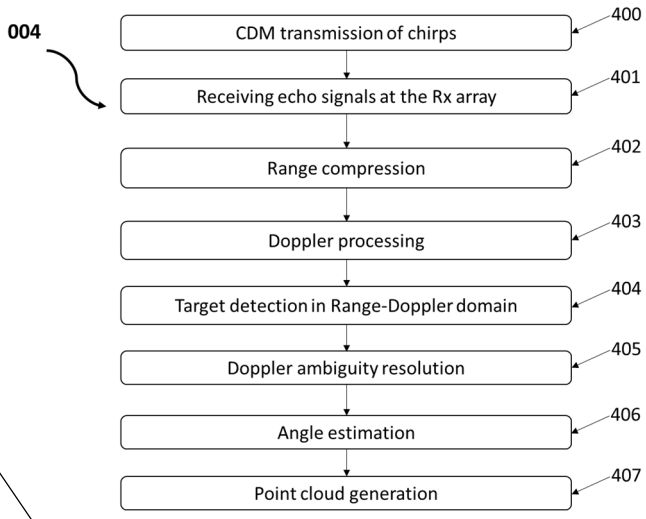

Figure-4: Overall processing flowchart

5) Figure-5: Doppler ambiguity resolution

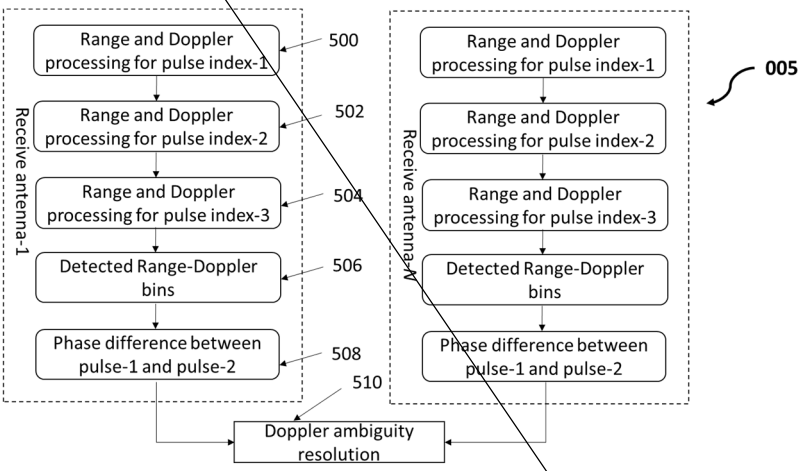

Figure-5: Doppler ambiguity resolution processing

1) Figure-1: Radar system architecture

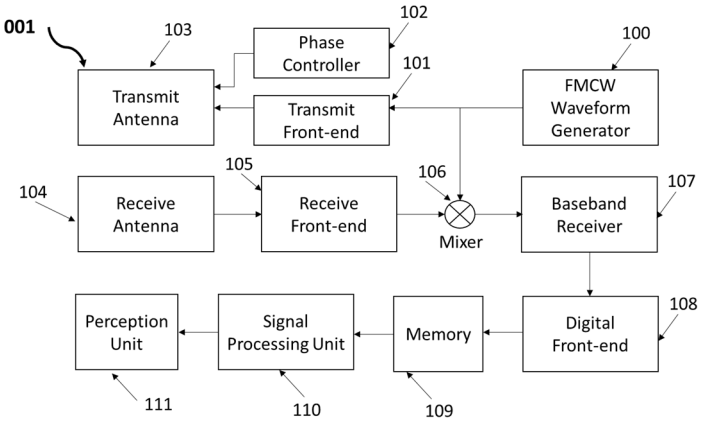

Figure-1: Radar system architecture

2) Figure-2: Transmitting and receiving antenna array

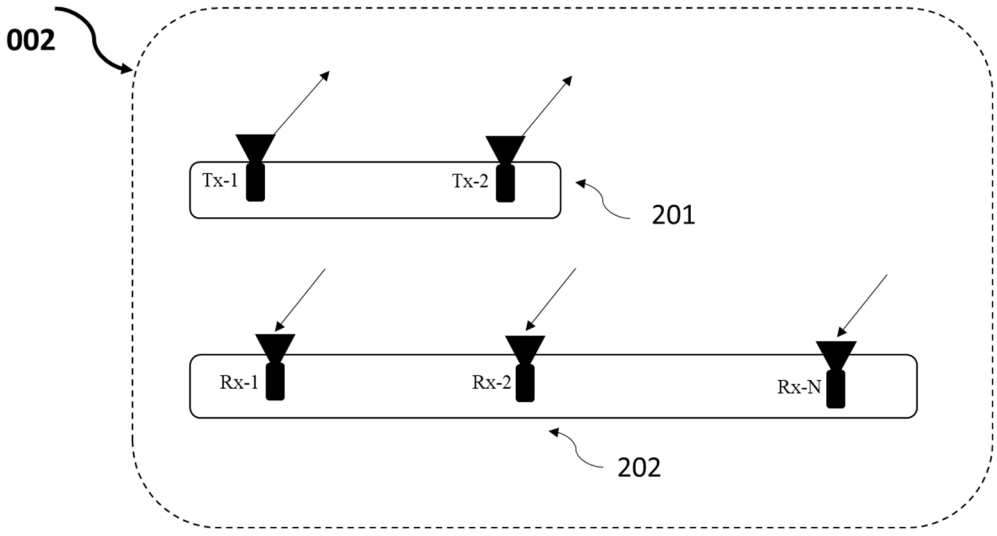

Figure-2: Transmitting and receiving antenna array configuration

3) Figure-3: CDM FMCW waveform scheduling for Doppler ambiguity resolution

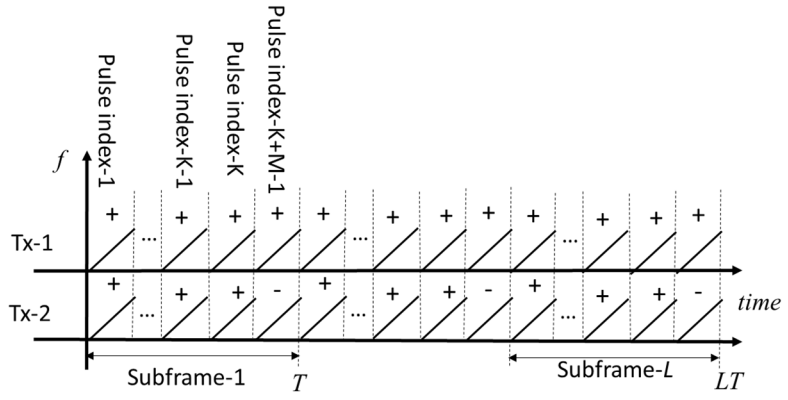

(a)

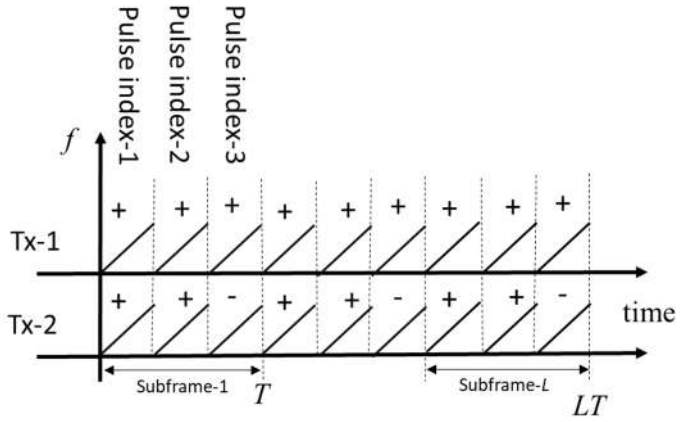

(b)

Figure-3 waveform transmit scheme for CDM Doppler ambiguity resolution (a) general configuration (b) illustrated with K=2

4) Figure-4: Overall processing flowchart

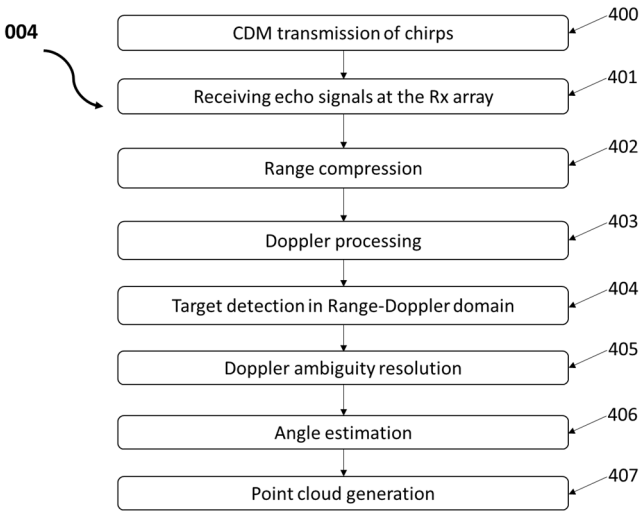

Figure-4: Overall processing flowchart

5) Figure-5: Doppler ambiguity resolution

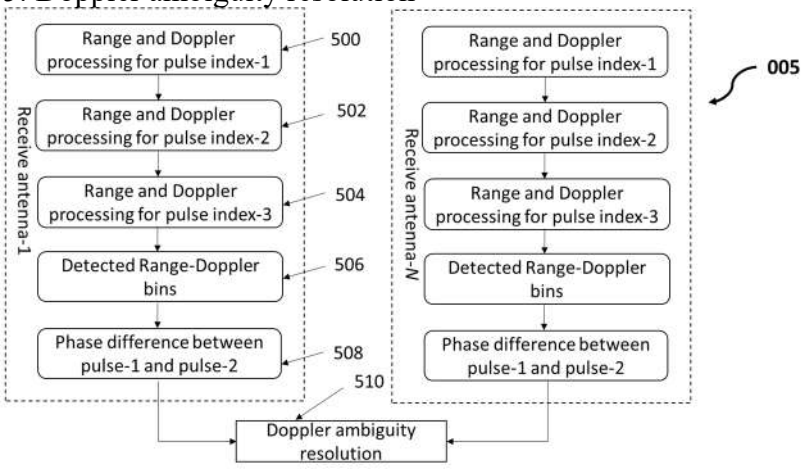

Figure-5: Doppler ambiguity resolution processing