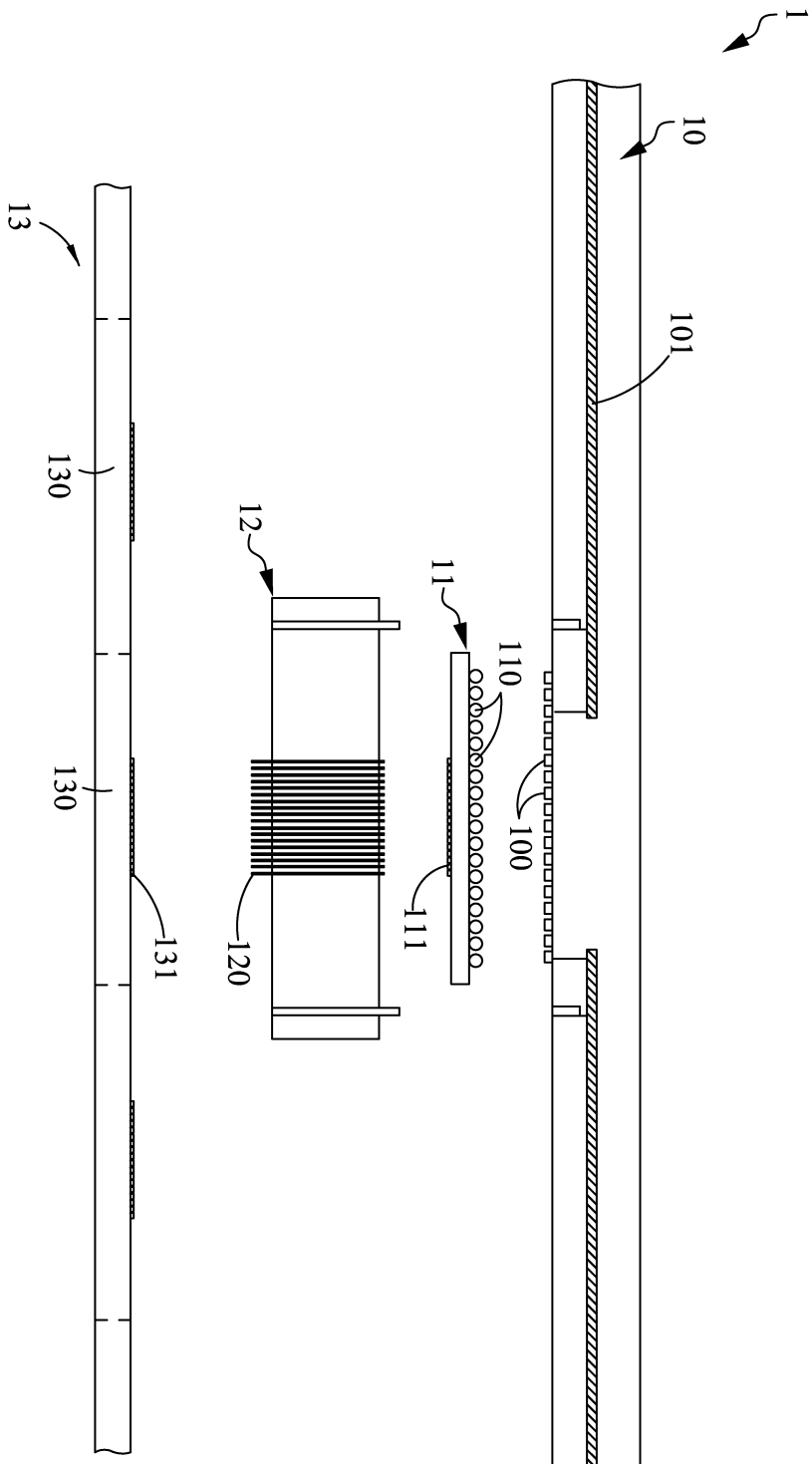

FIG. 1

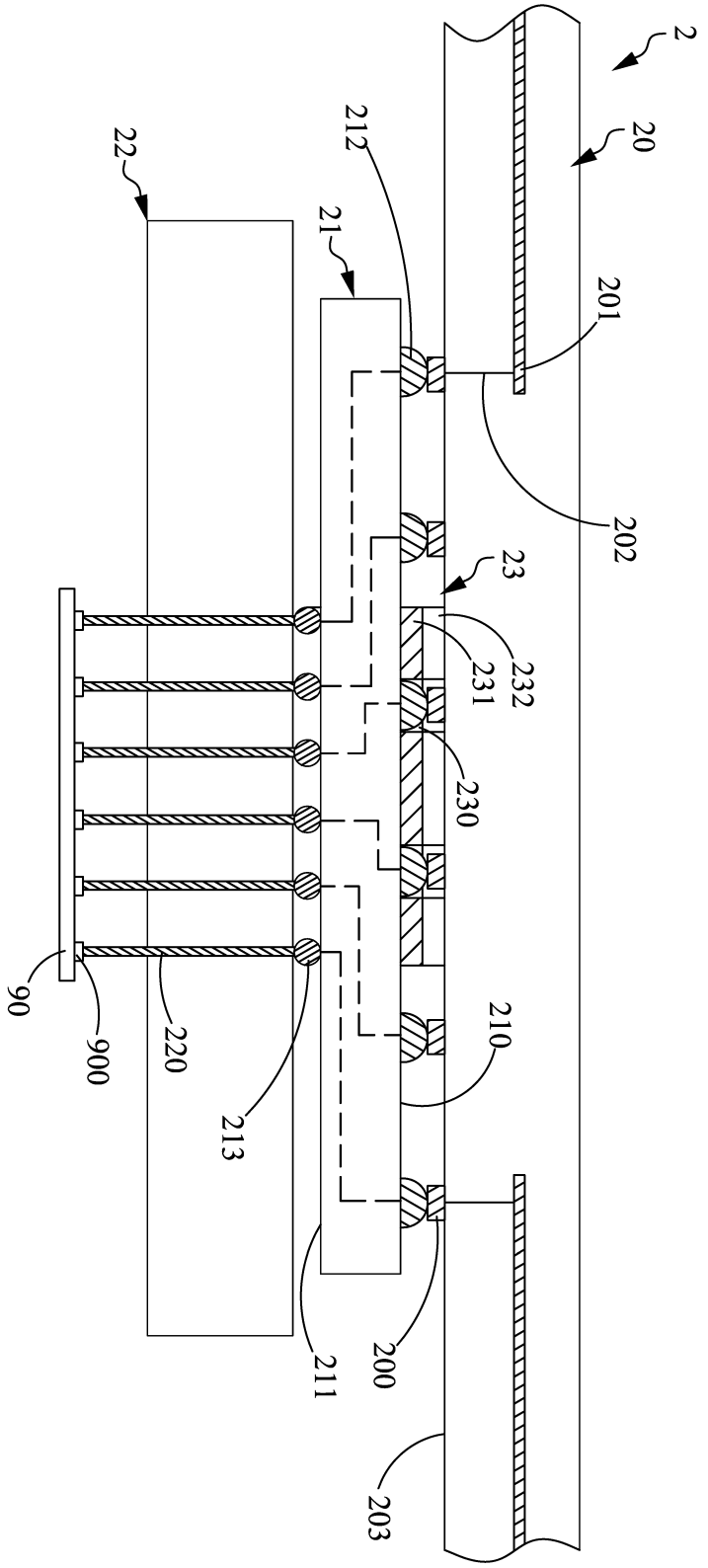
2
20
212
22
21
201
202
23
232
231
230
210
90
900
220
213
200
211
203

FIG. 2A

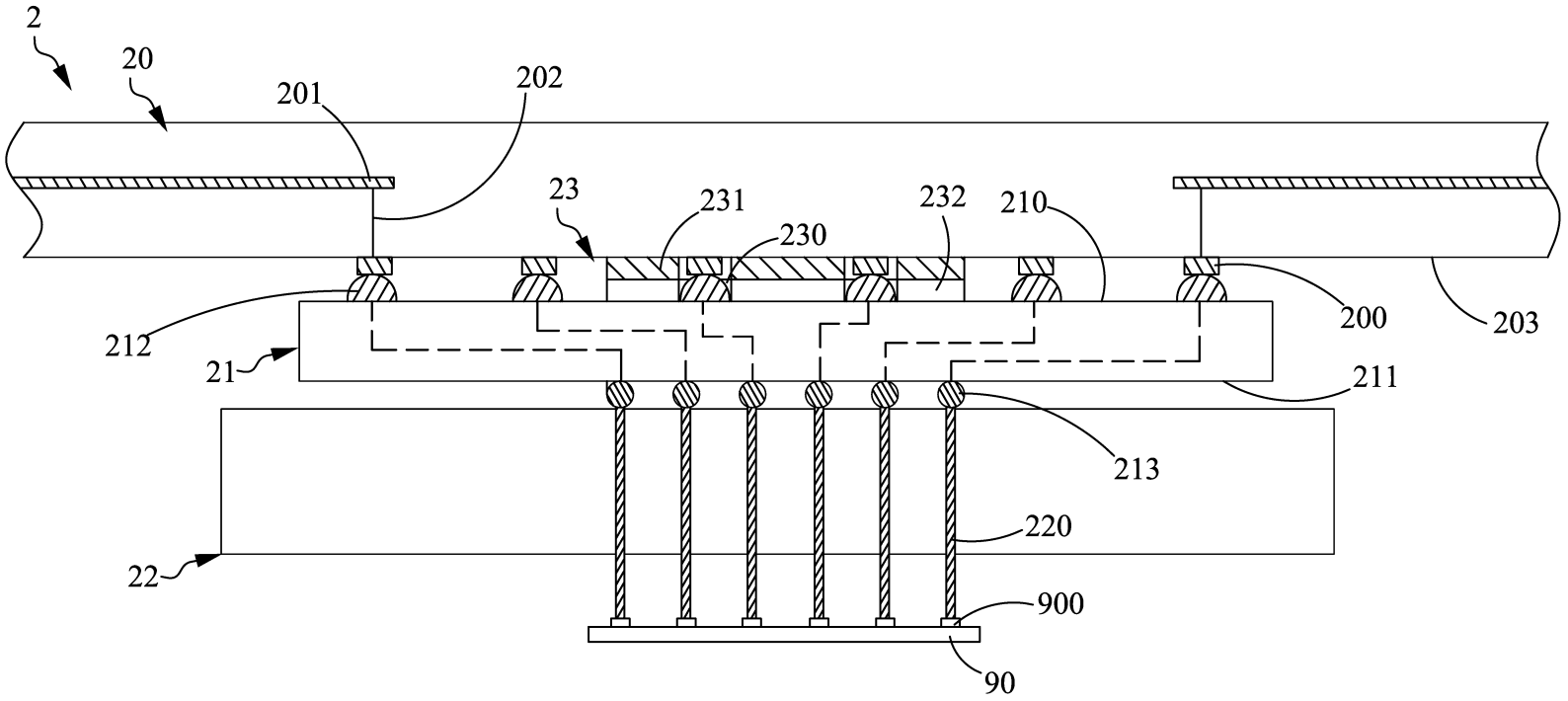
2
20
201
202
23
231
232
210
230
212
200
203
21
211
213
220
22
900
90

FIG. 2B

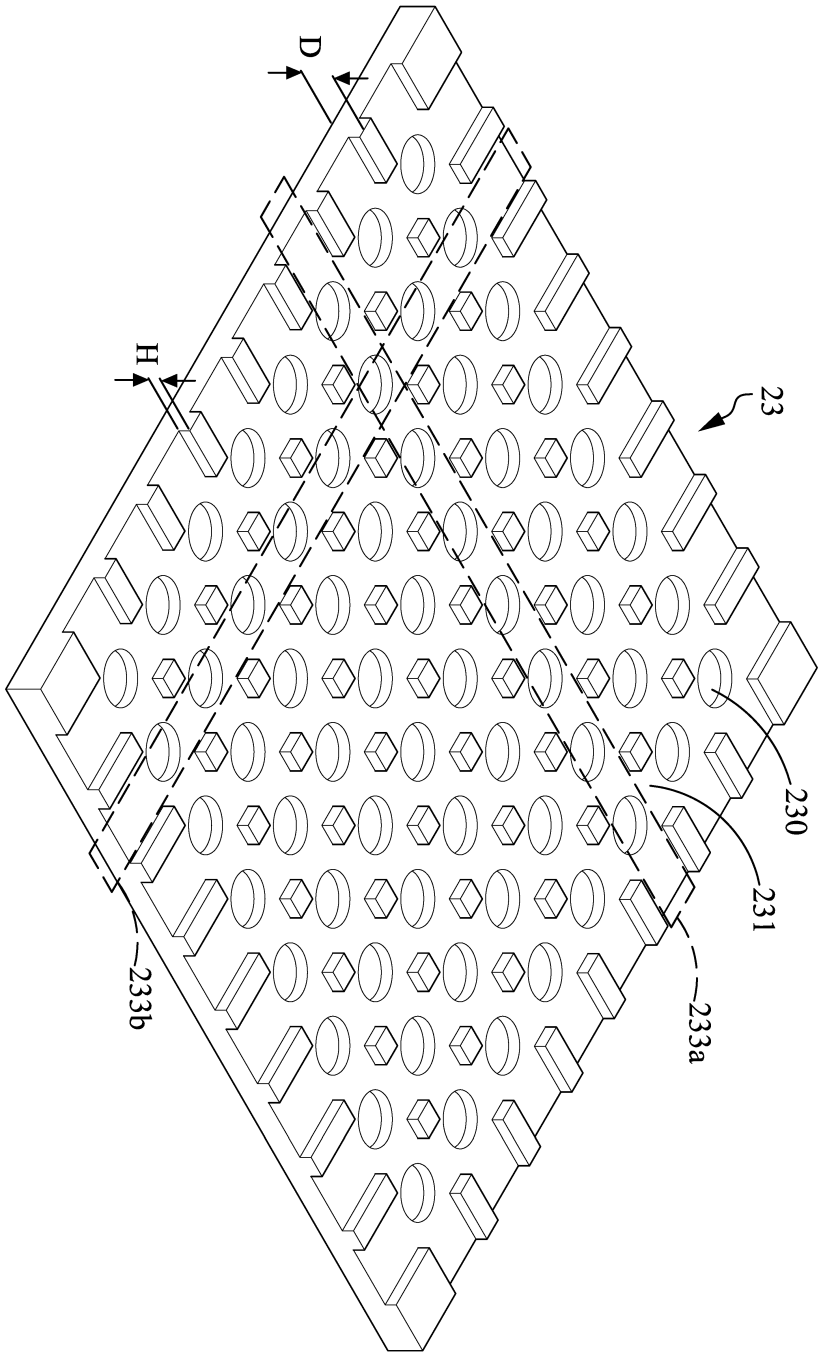

FIG. 3

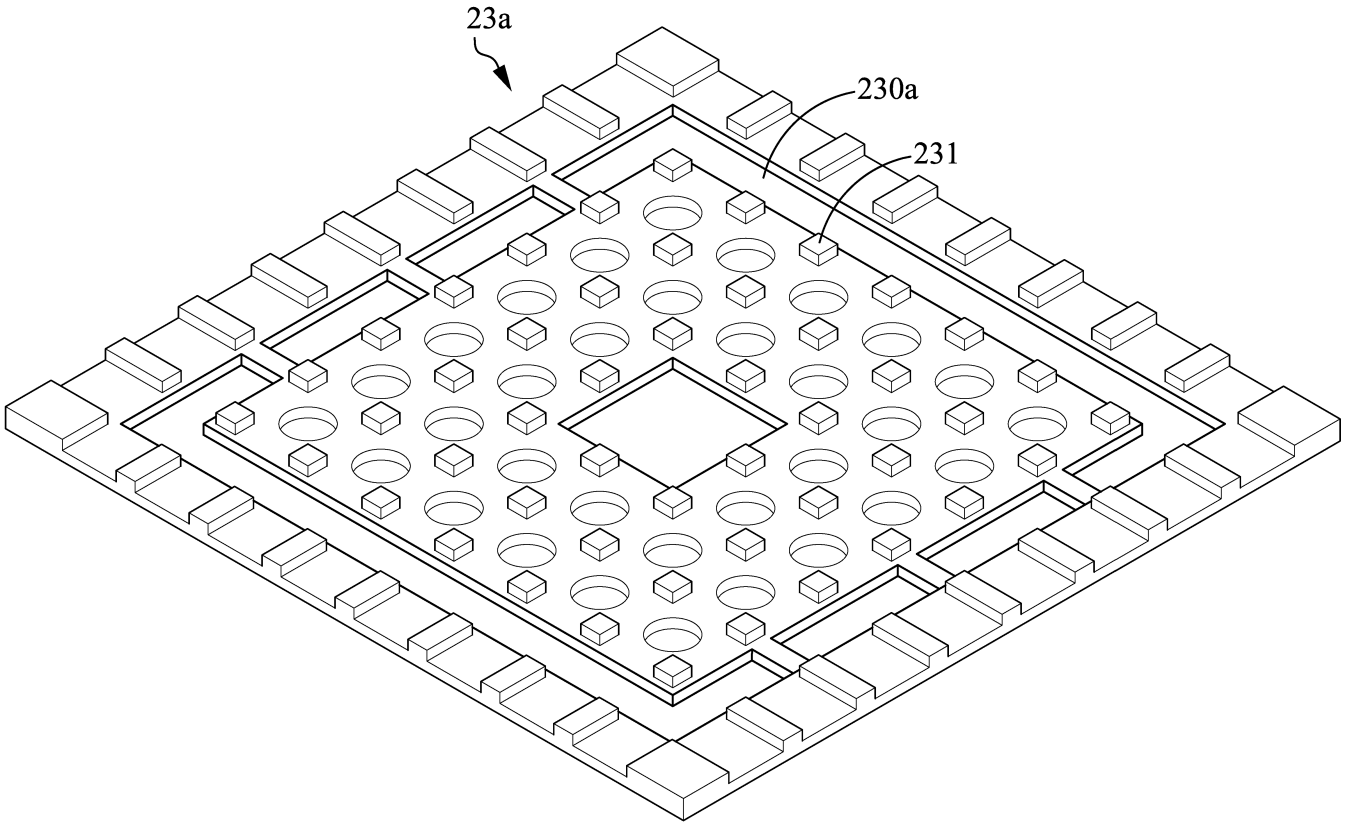

FIG. 4A

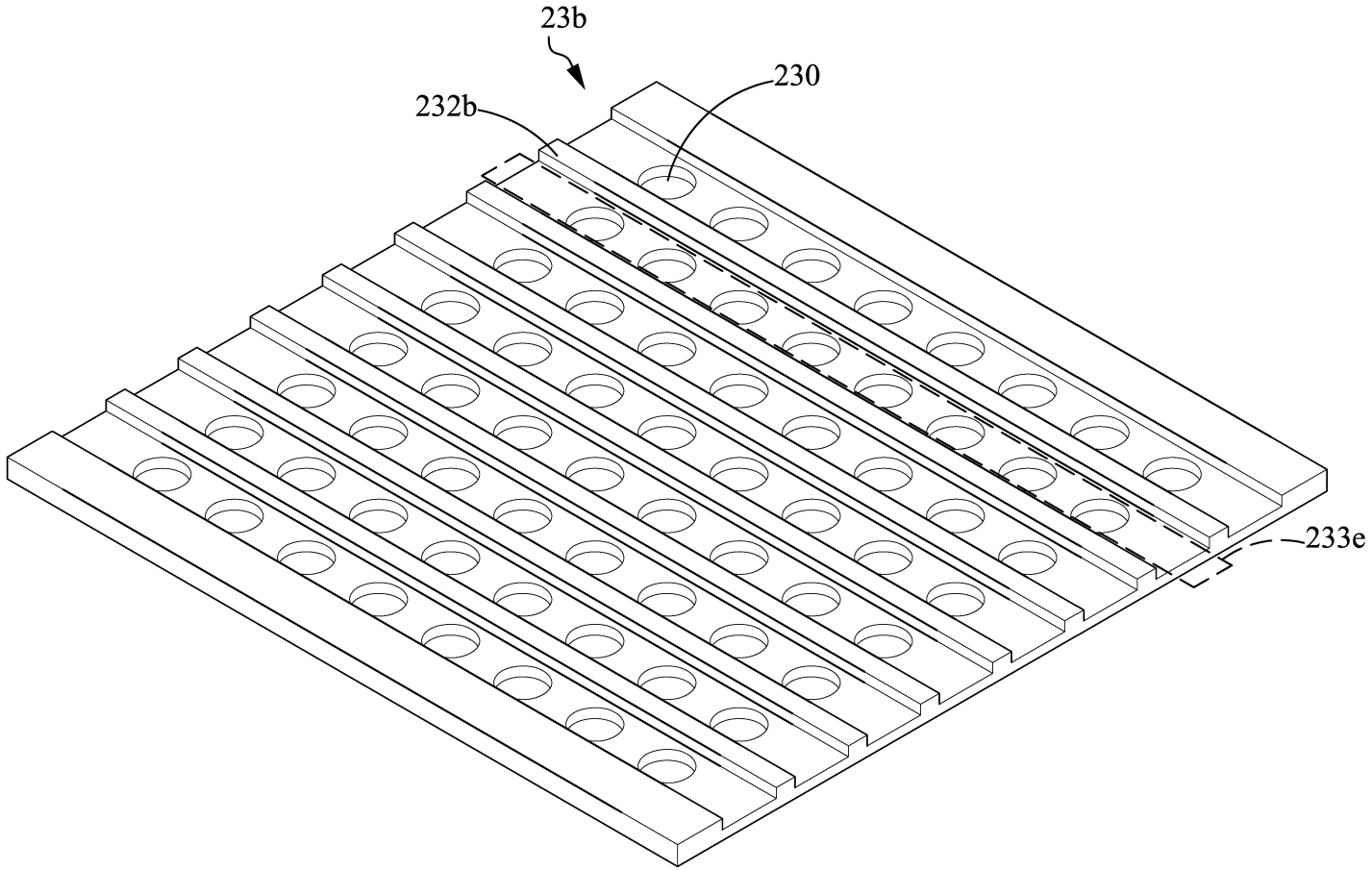

FIG. 4B

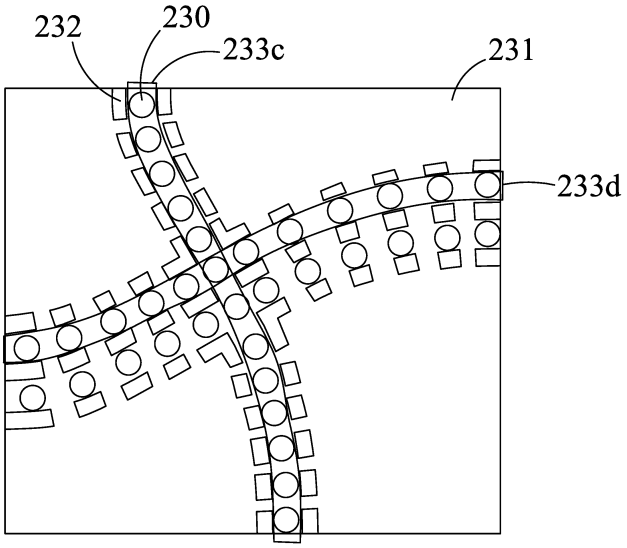

FIG. 4C

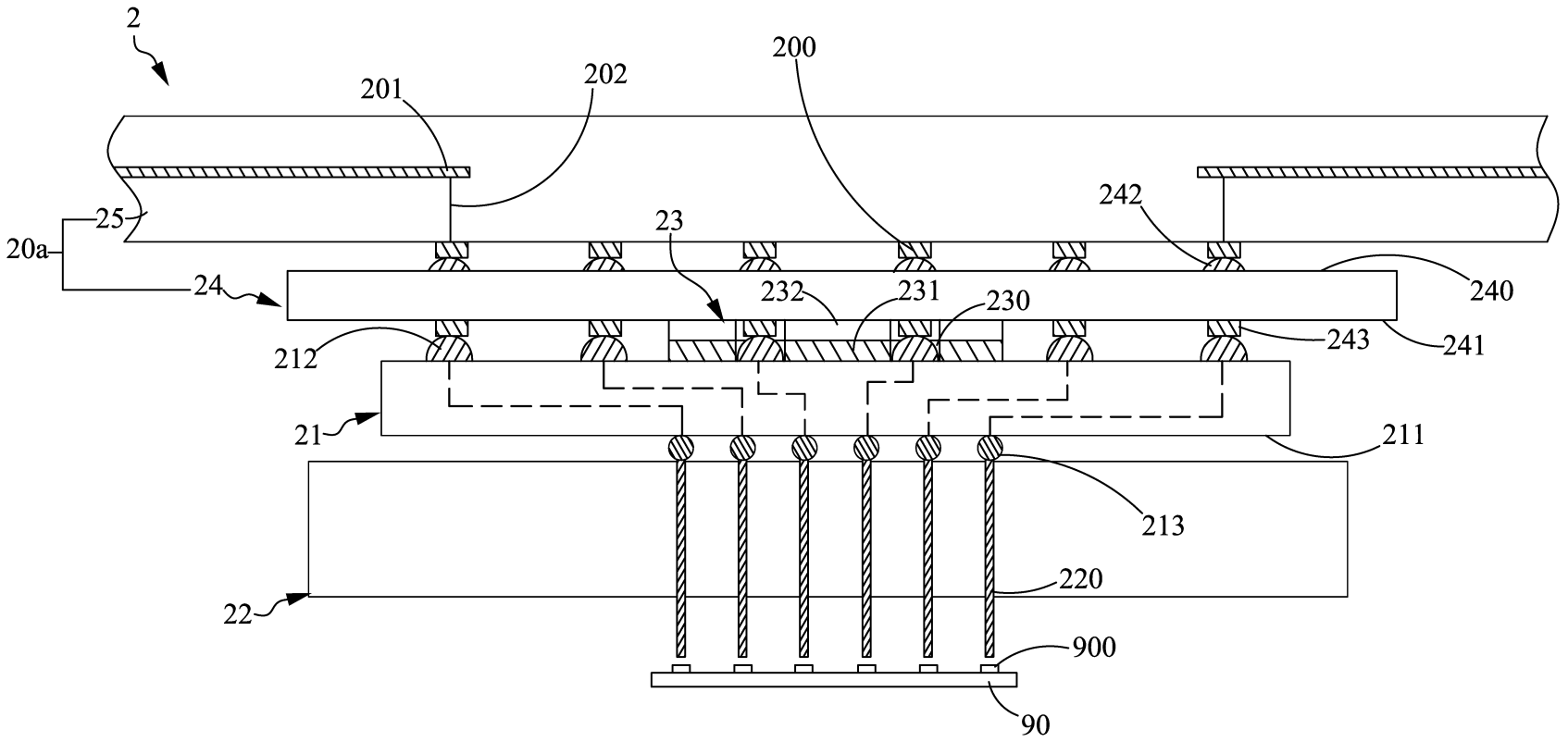
2
200
201
202
242
25
20a
23
24
232
231
230
240
212
243
241
21
211
213
220
22
900
90

FIG. 5A

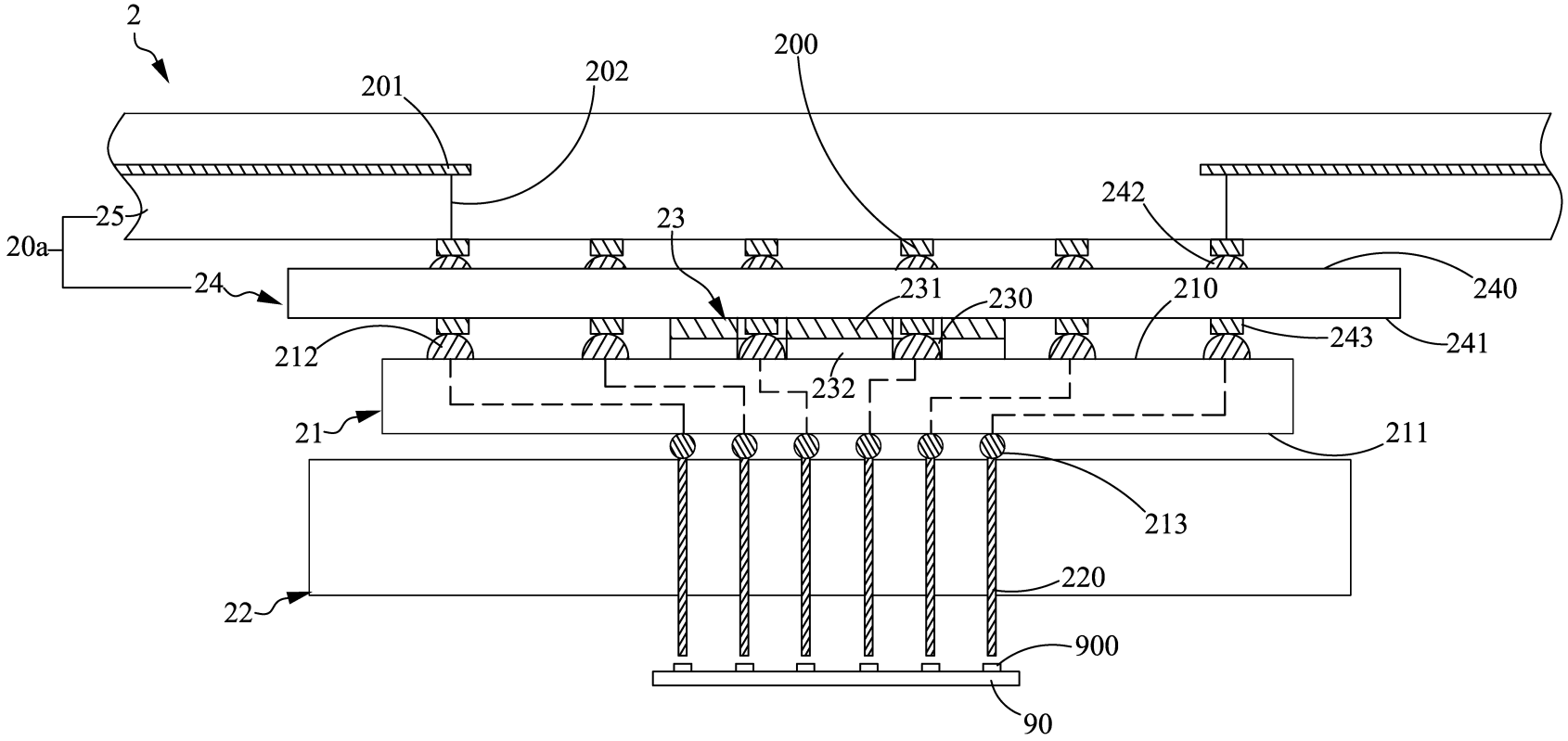
2
200
201
202
242
25
23
20a
24
231
230
210
240
212
243
241
232
21
211
213
220
22
900
90

FIG. 5B

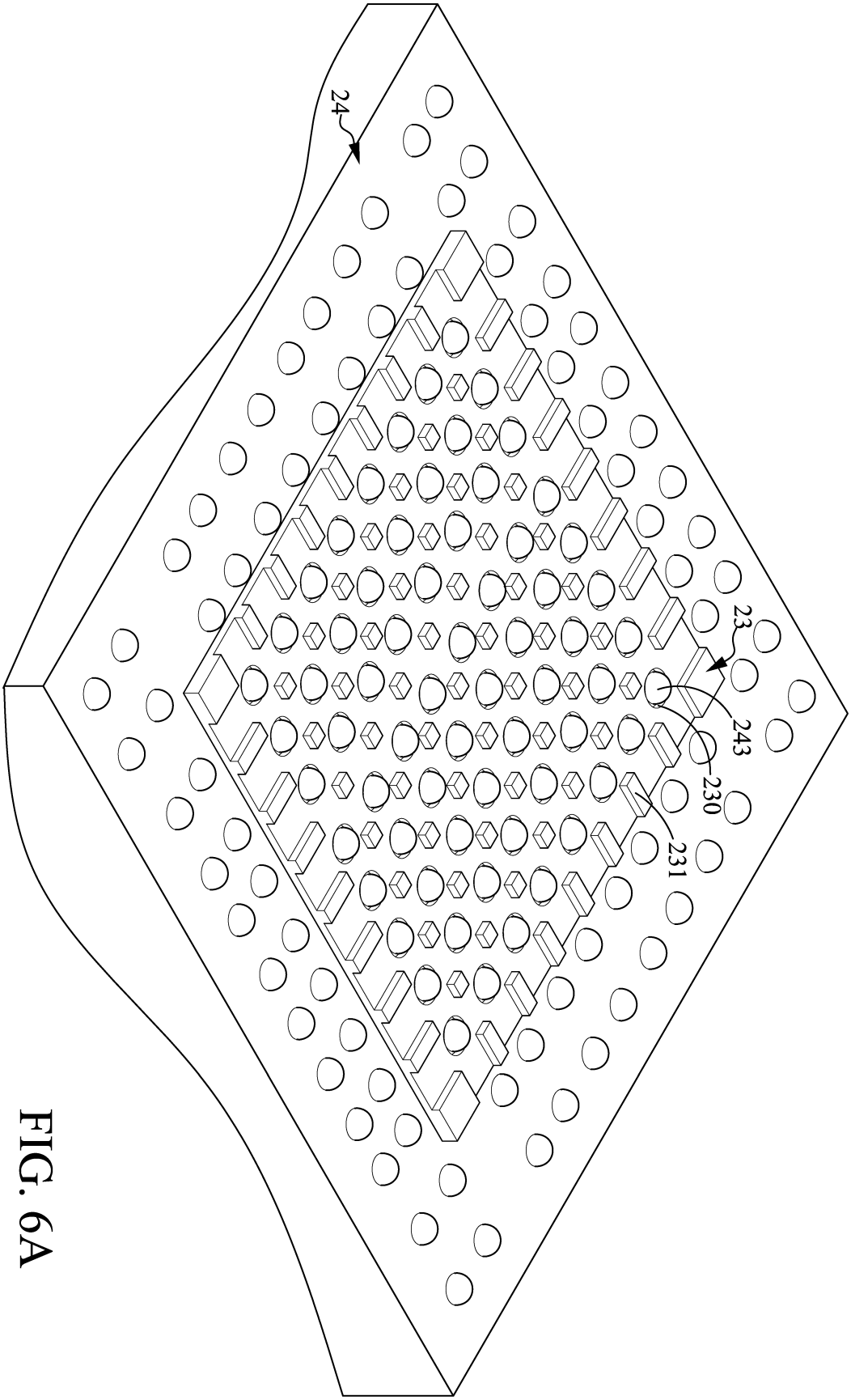

FIG. 6A

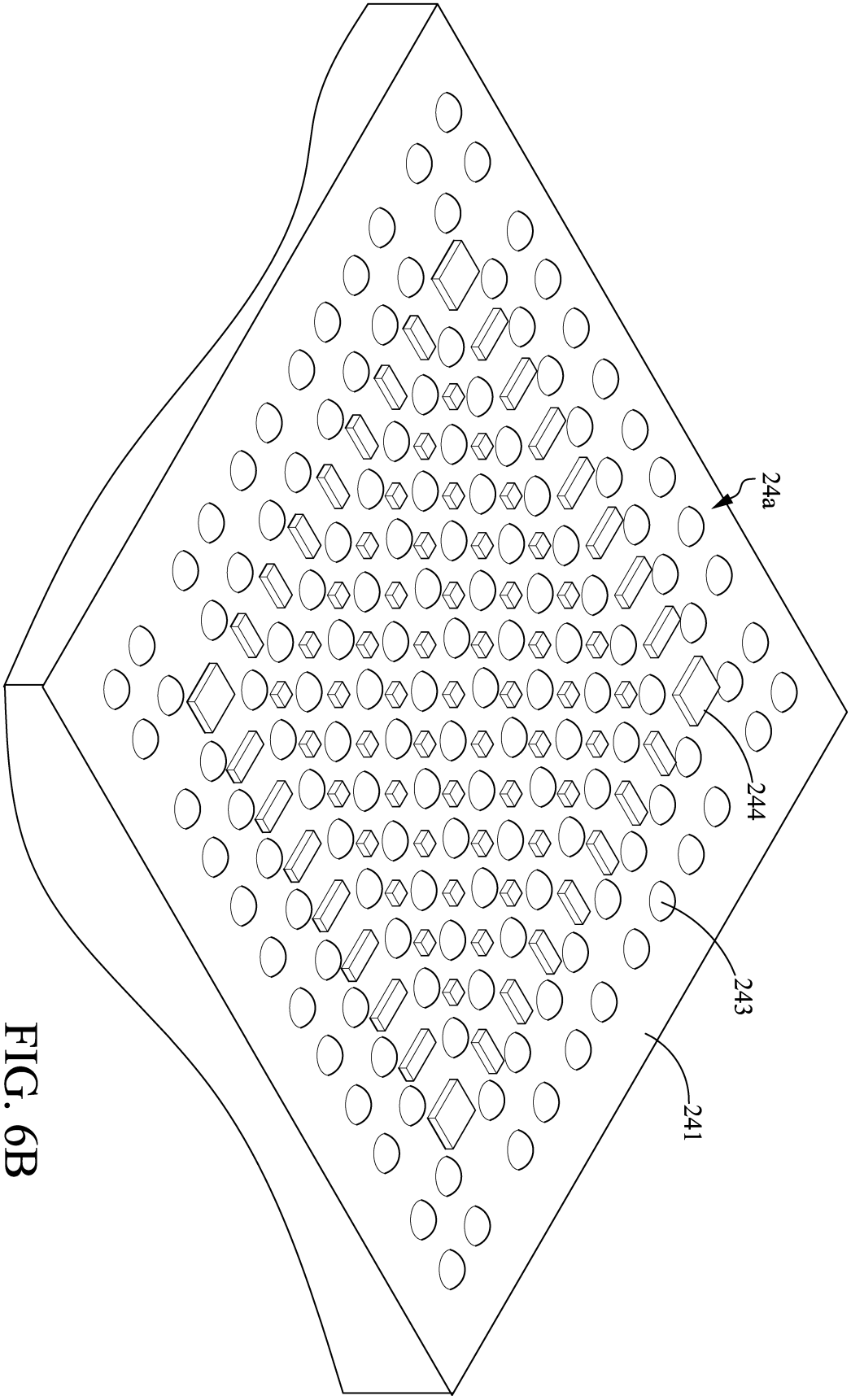

FIG. 6B

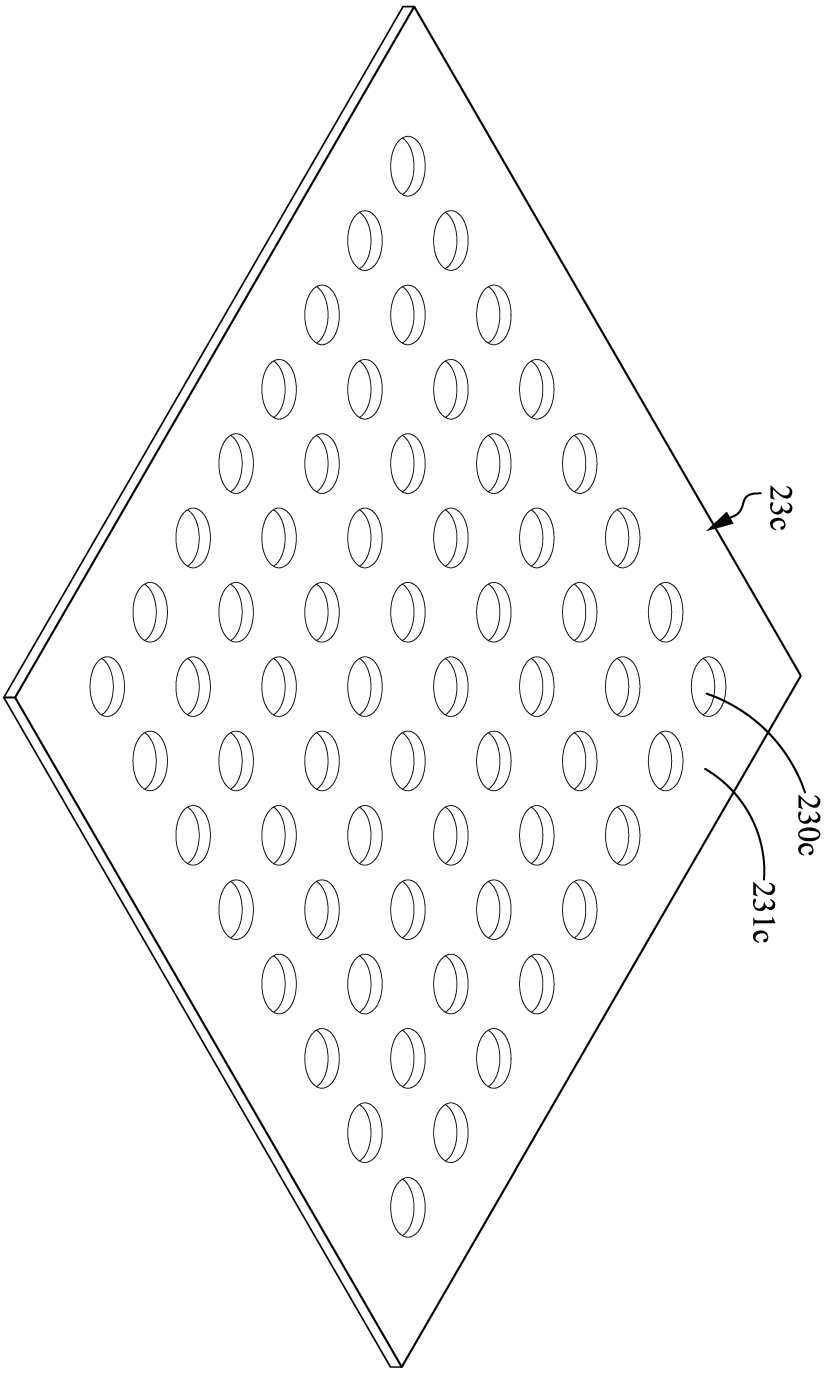

FIG. 6C

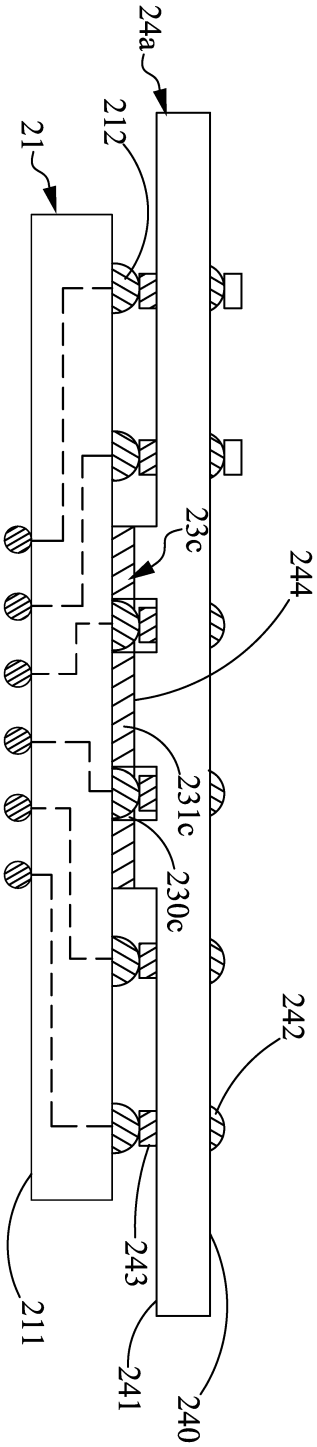

FIG. 6D

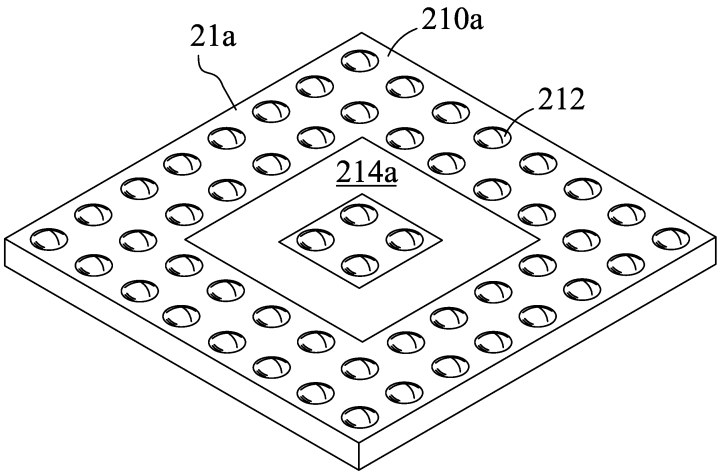

FIG. 7A

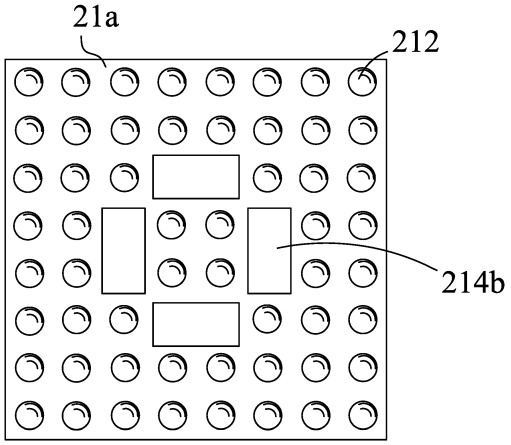

FIG. 7B

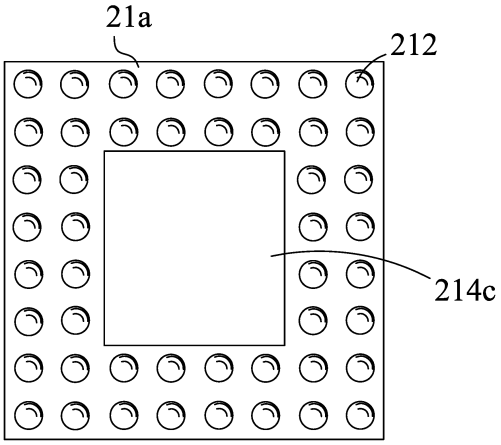

FIG. 7C

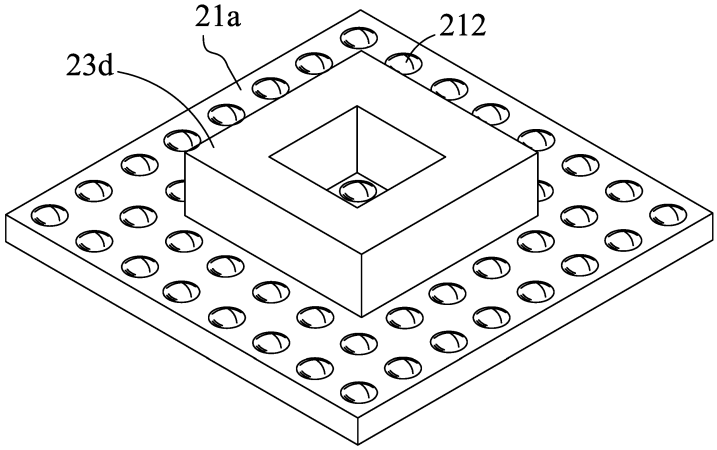

FIG. 8A

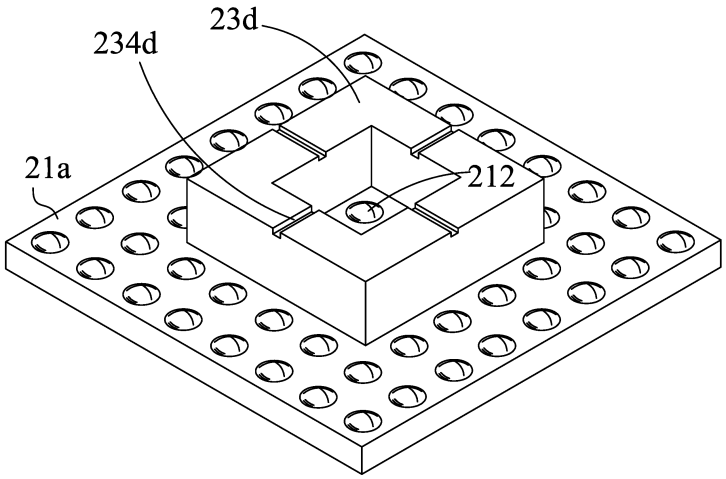

FIG. 8B

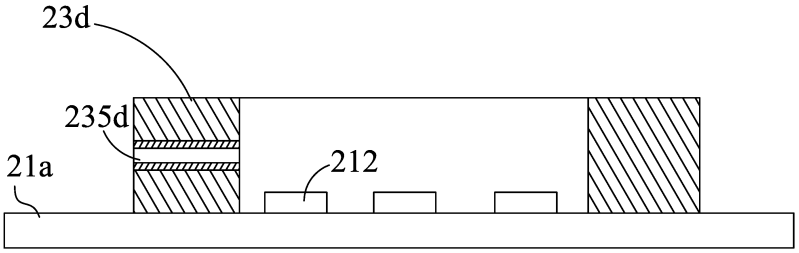

FIG. 8C

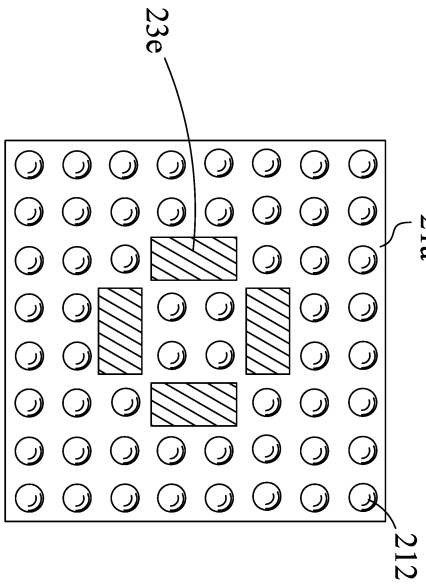

FIG. 9A

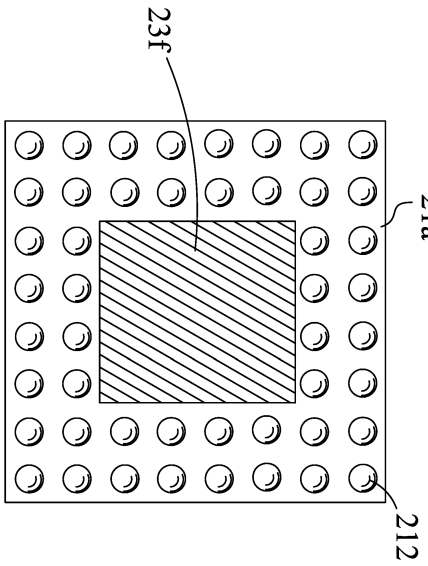

FIG. 9B

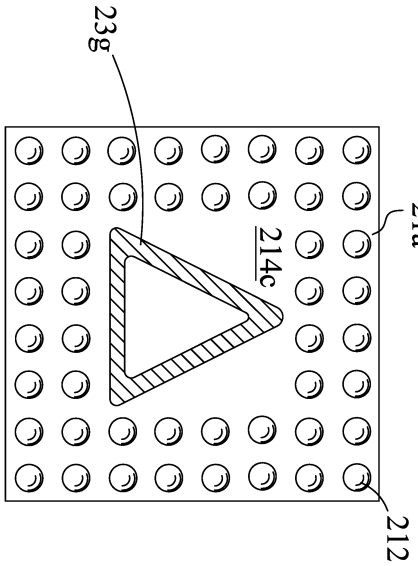

FIG. 9C

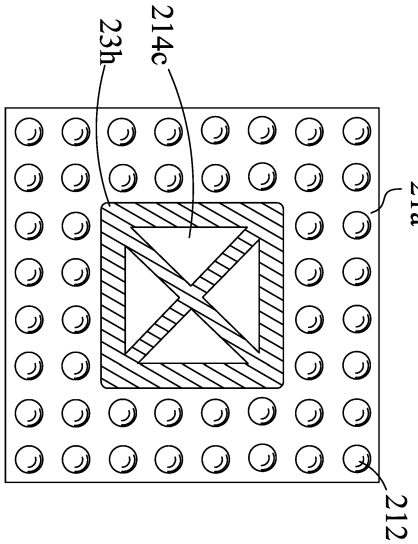

FIG. 9D

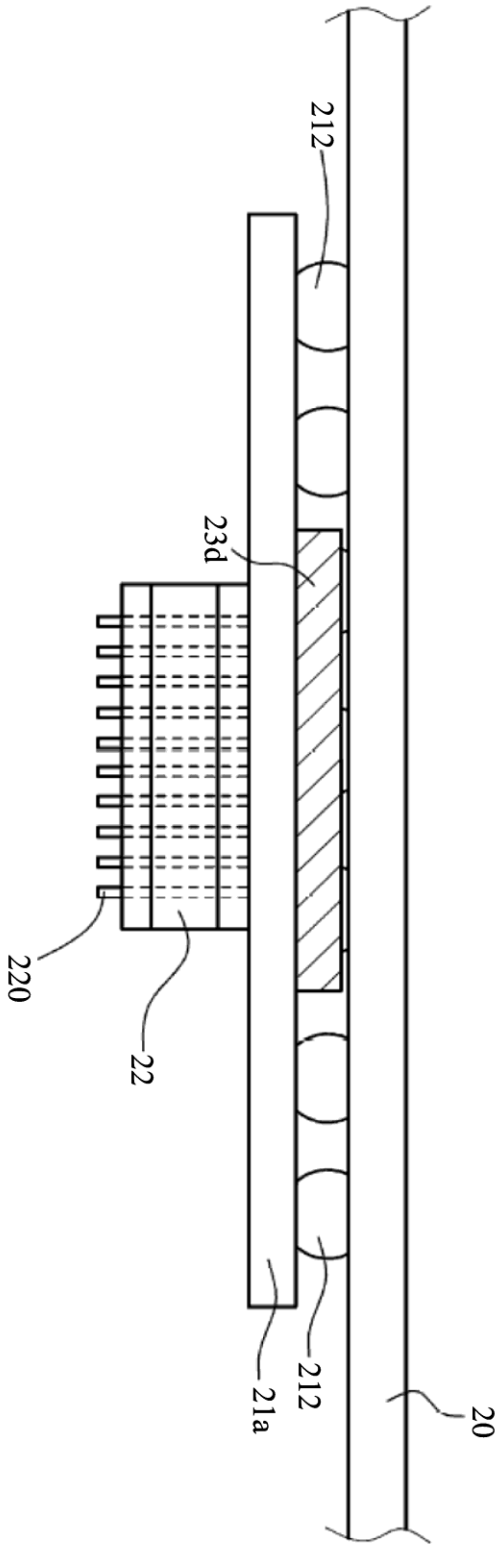

FIG. 10A

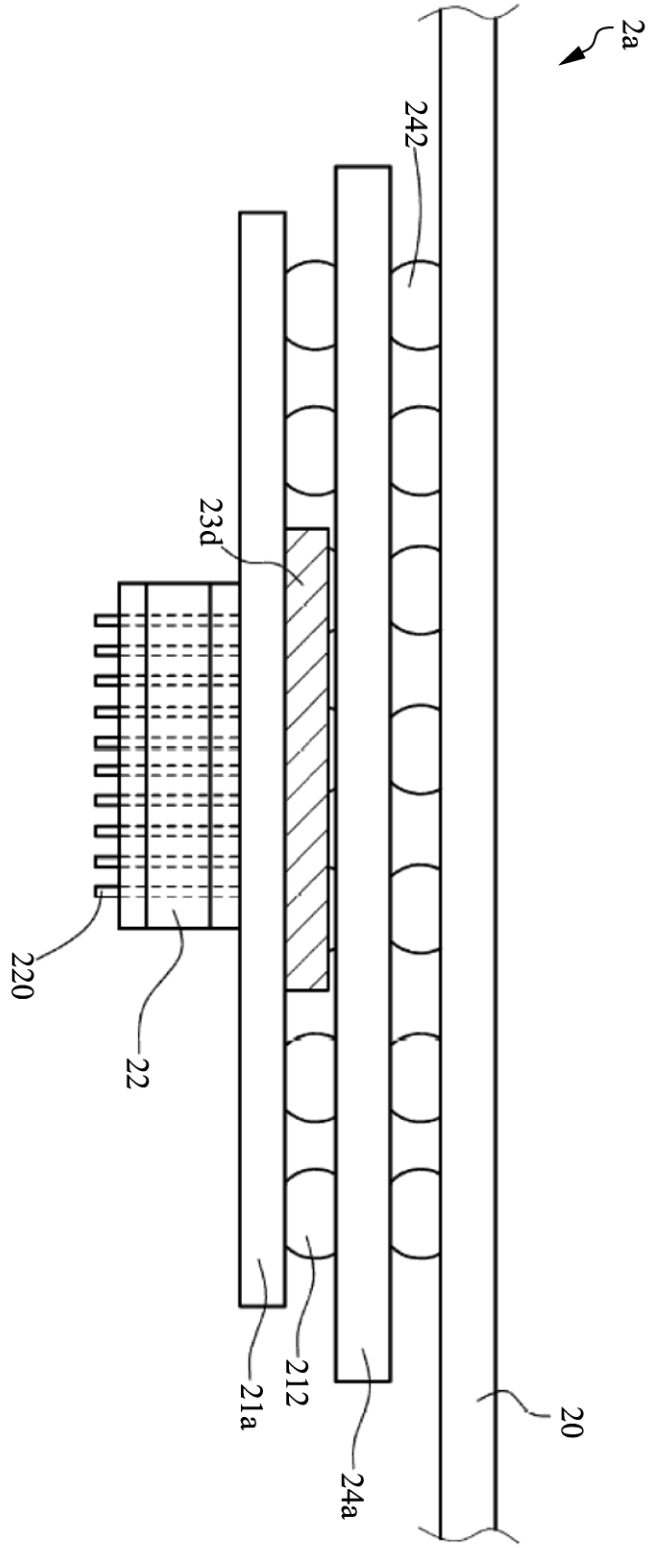

FIG. 10B

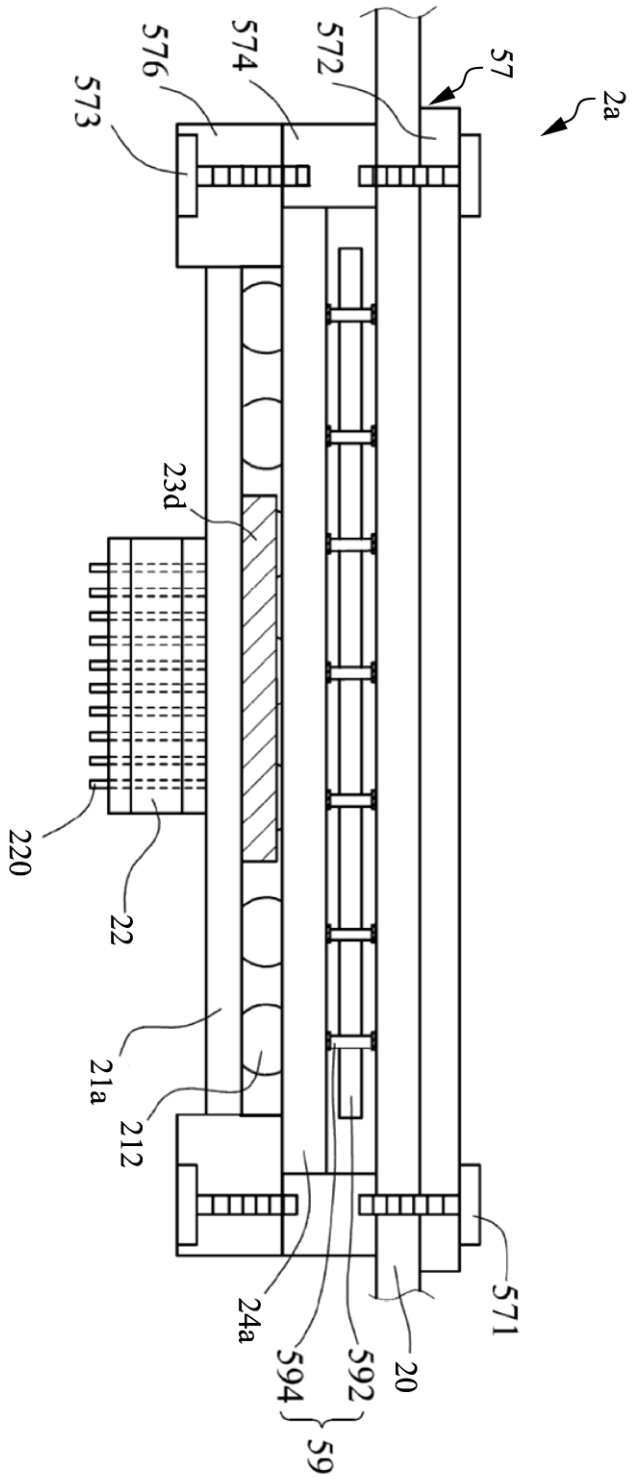

FIG. 10C

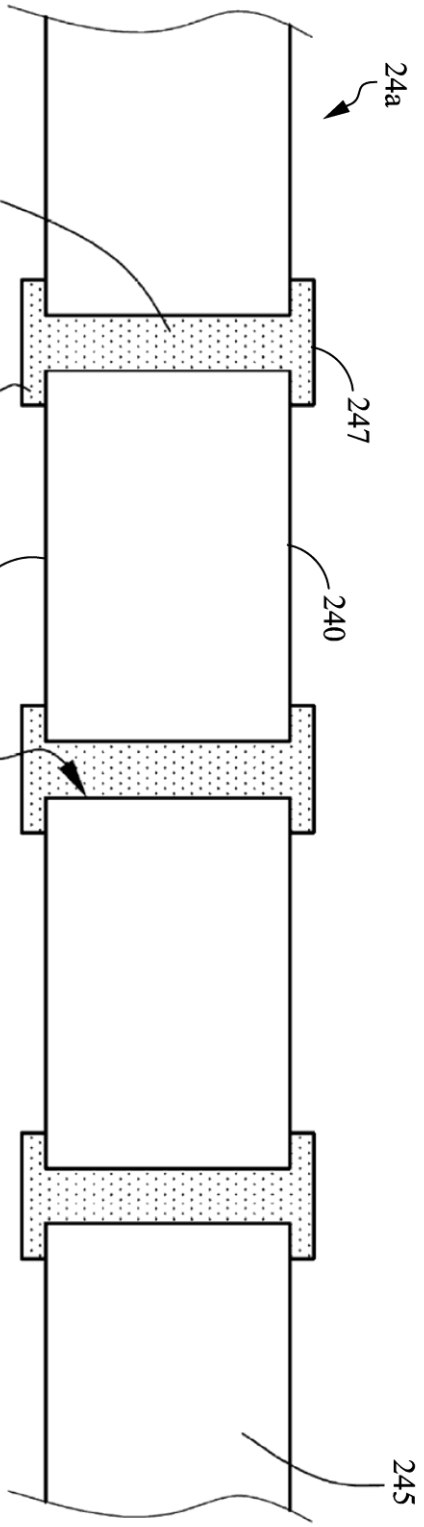

FIG. 11A

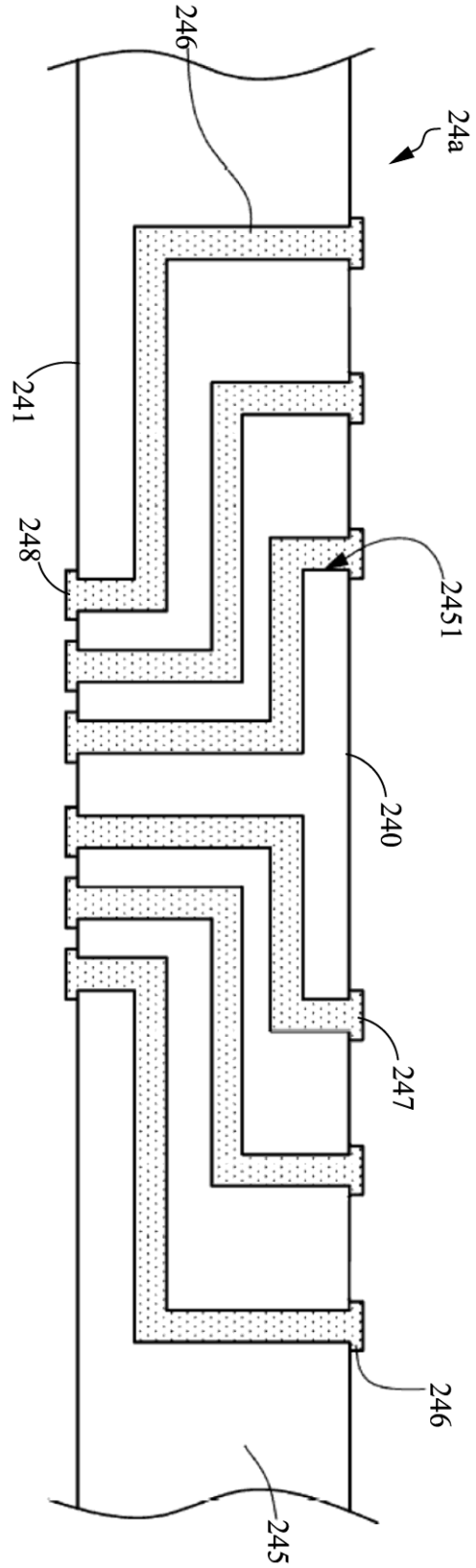

FIG. 11B

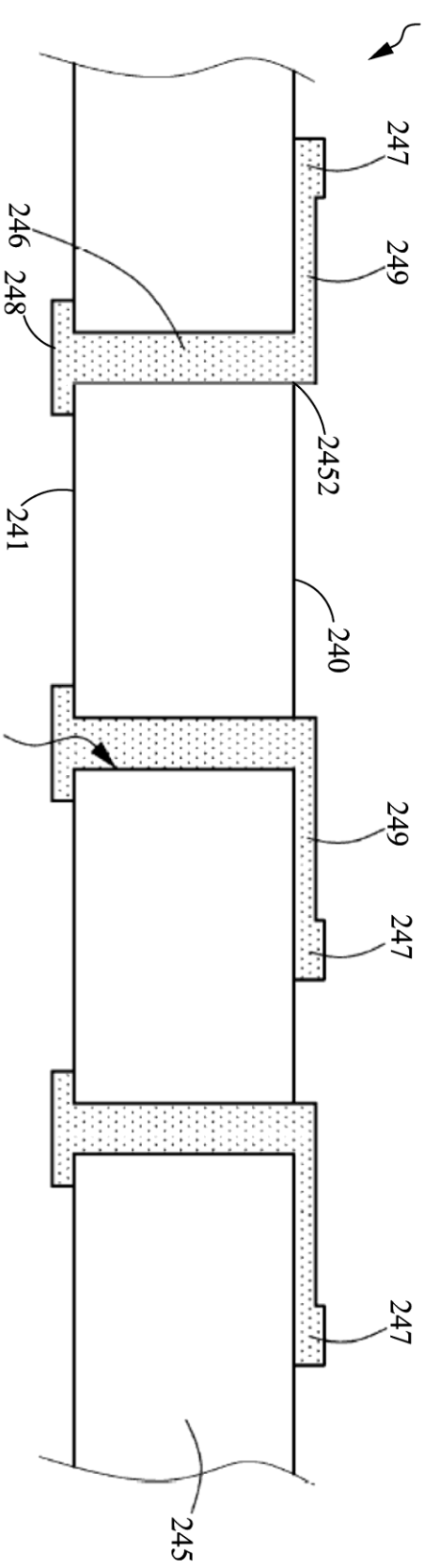

FIG. 11C

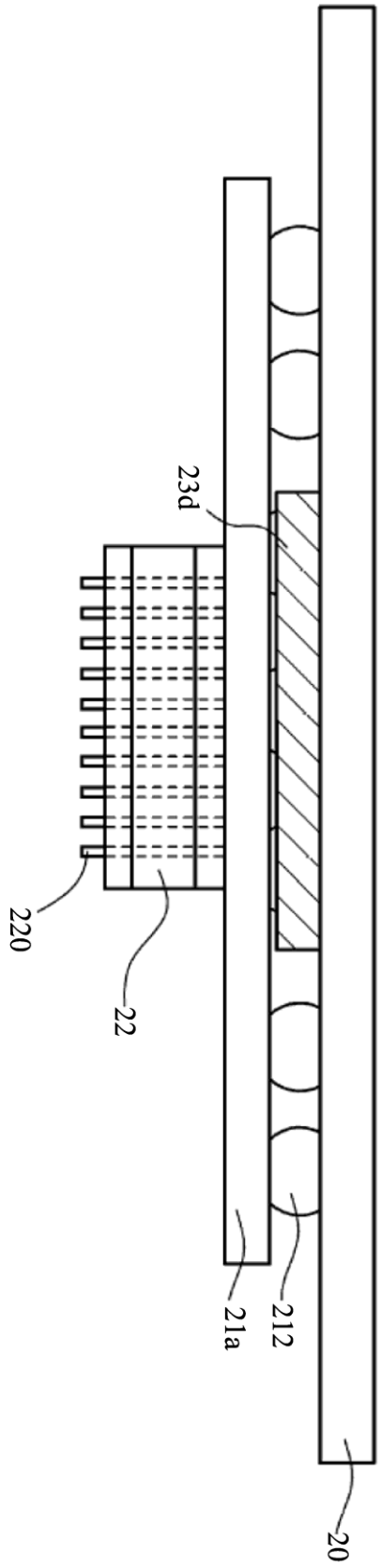

FIG. 12A

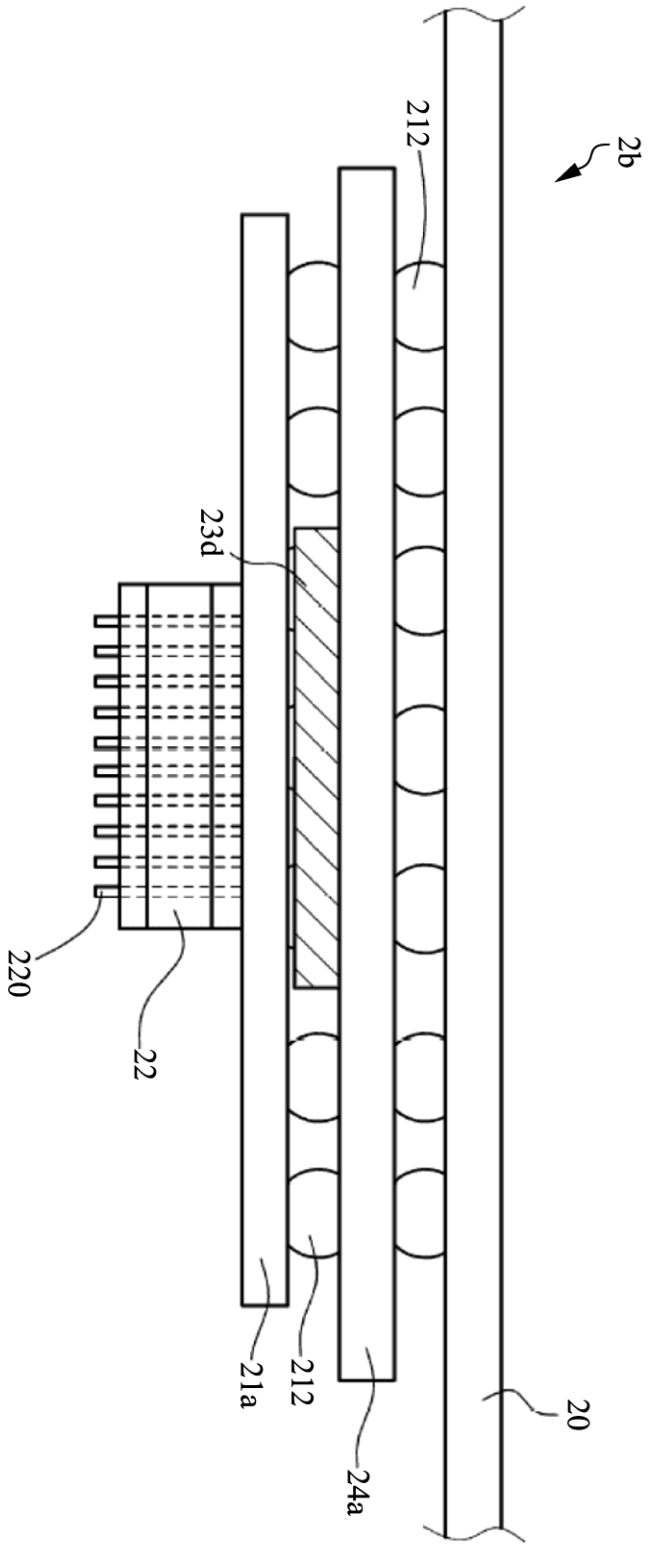

FIG. 12B

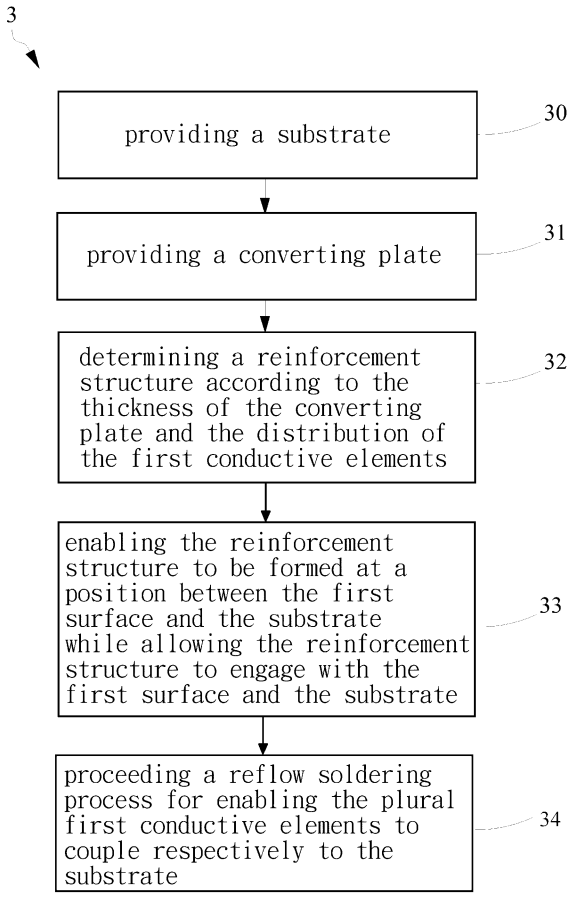
3
providing a substrate
30
providing a converting plate
31
determining a reinforcement structure according to the thickness of the converting plate and the distribution of the first conductive elements
32
enabling the reinforcement structure to be formed at a position between the first surface and the substrate while allowing the reinforcement structure to engage with the first surface and the substrate
33
proceeding a reflow soldering process for enabling the plural first conductive elements to couple respectively to the substrate
34

FIG. 13

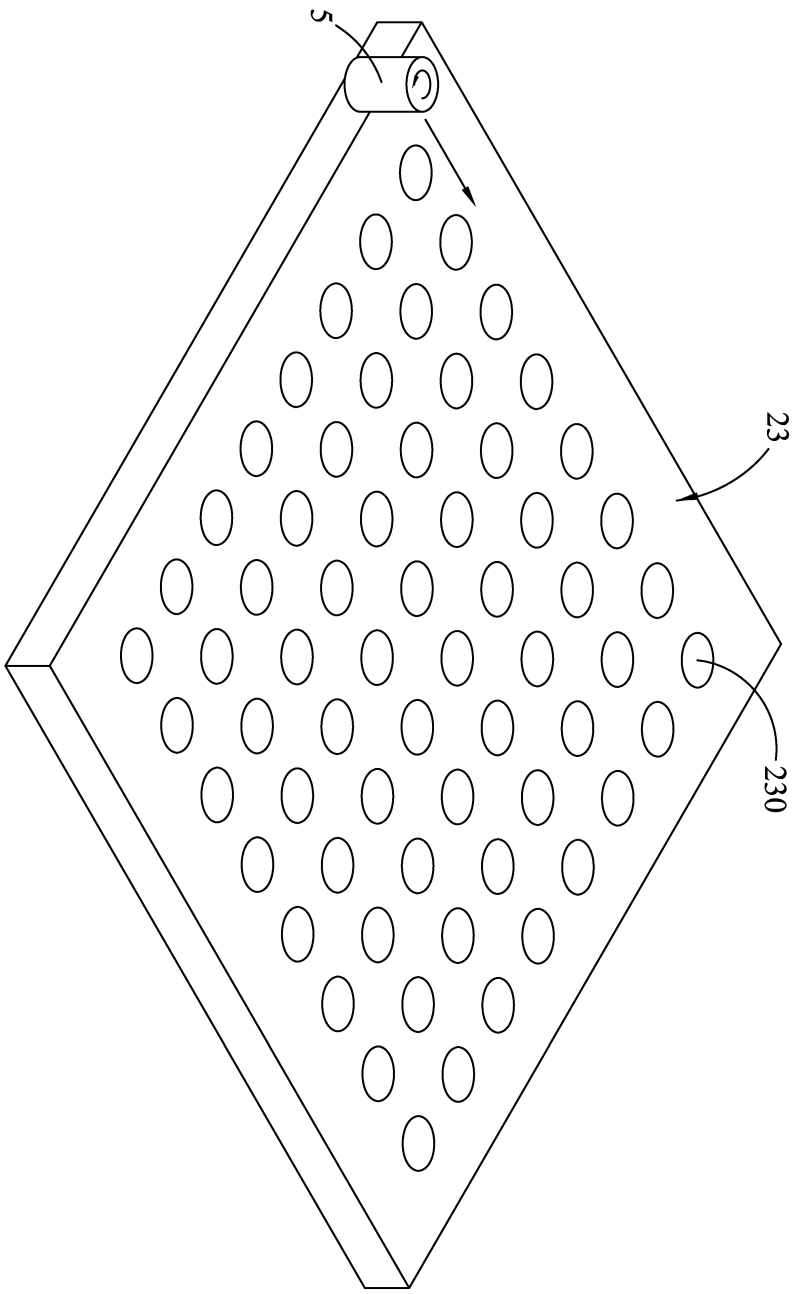

FIG. 14