FIG. 1

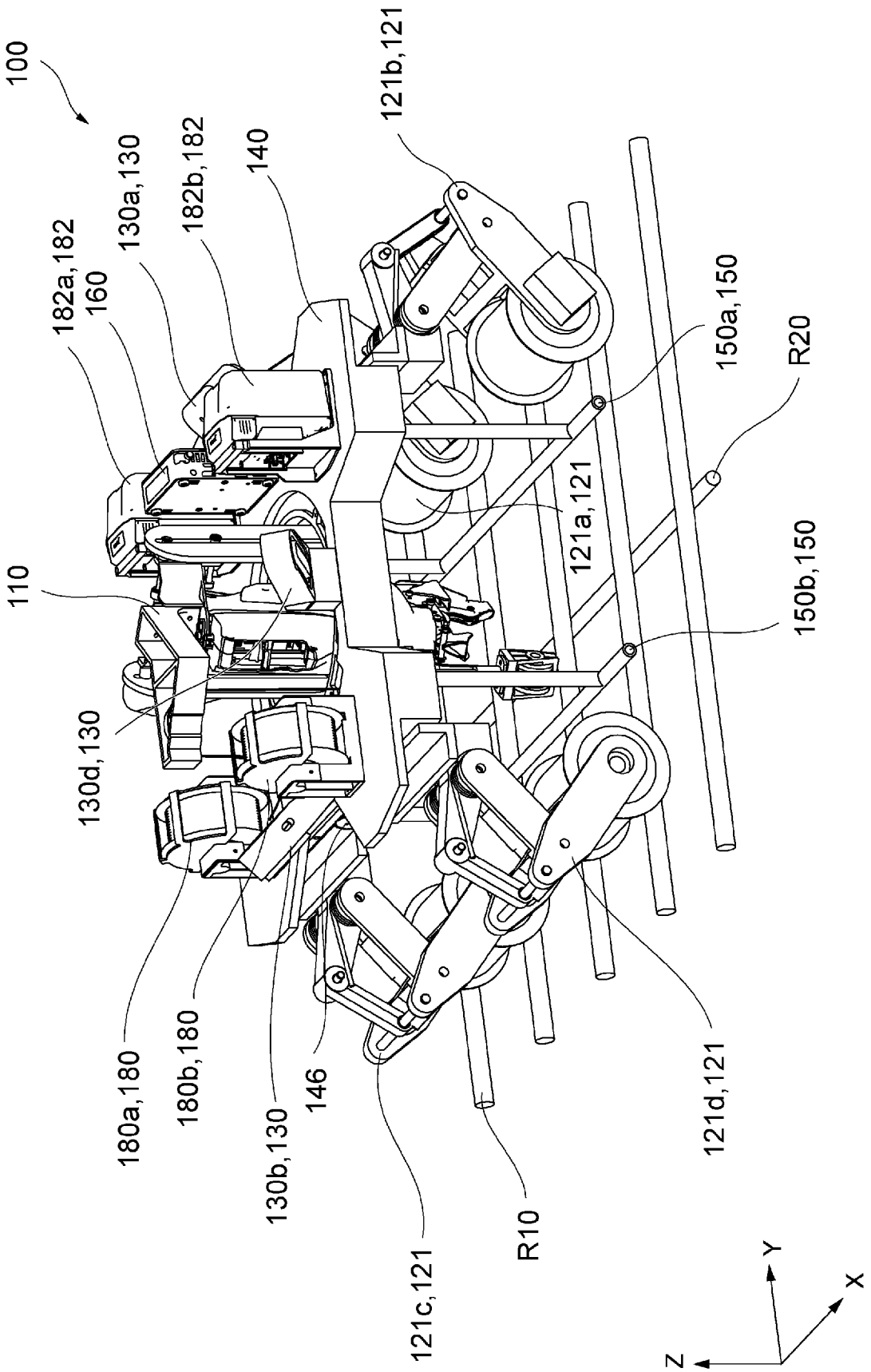
100
121b,121
140
182b,182
130a,130
182a,182
160
150a,150
R20
121a,121
110
150b,150
130d,130
180a,180
180b,180
130b,130
146
121c,121
R10
121d,121
Y
X
Z

FIG. 2

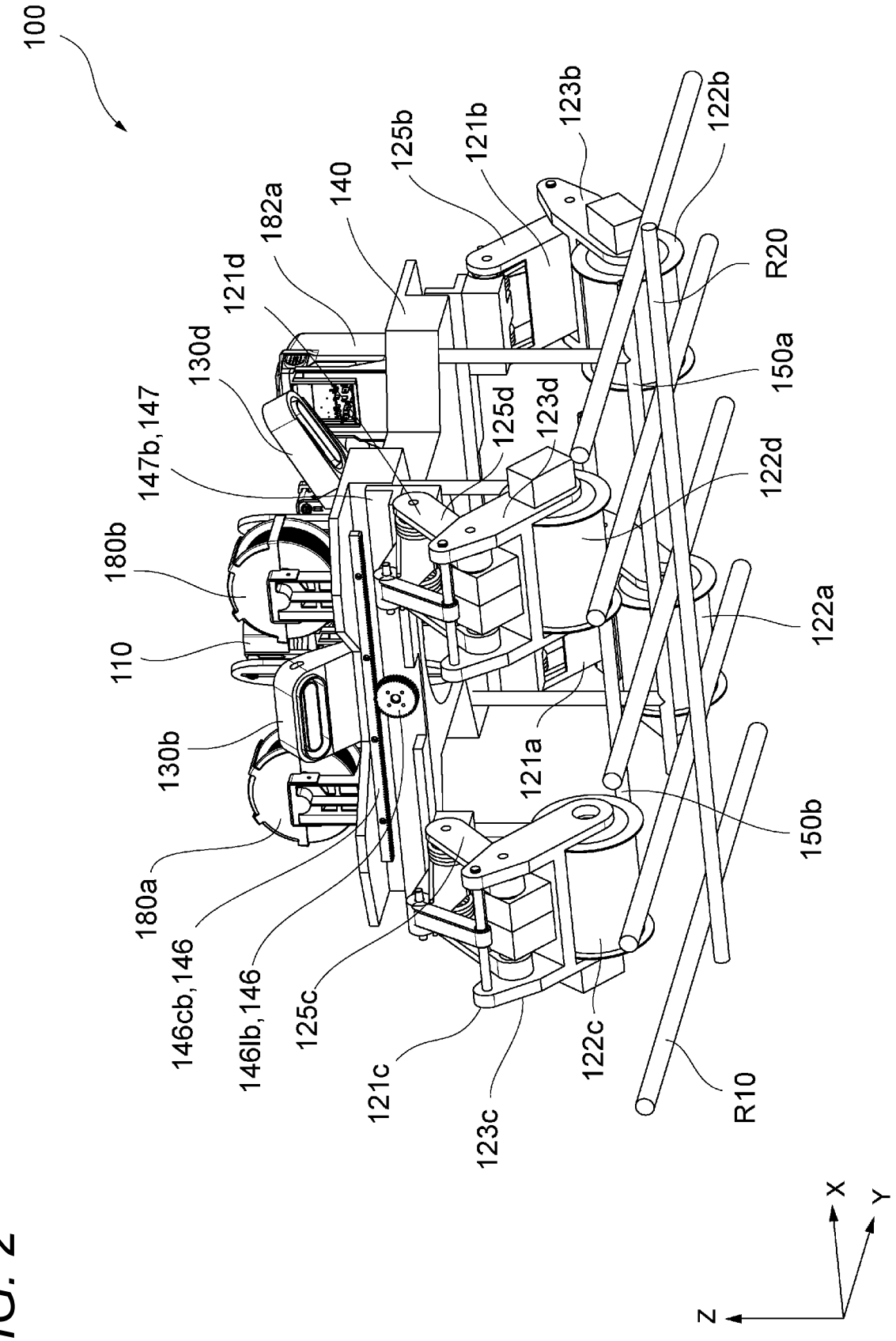
100
182a
140
125b
121b
123b
122b
R20
121d
130d
147b,147
125d
123d
150a
122d
180b
110
130b
122a
121a
150b
180a
146cb,146
146lb,146
125c
121c
123c
122c
R10
Z
X
Y

FIG. 3

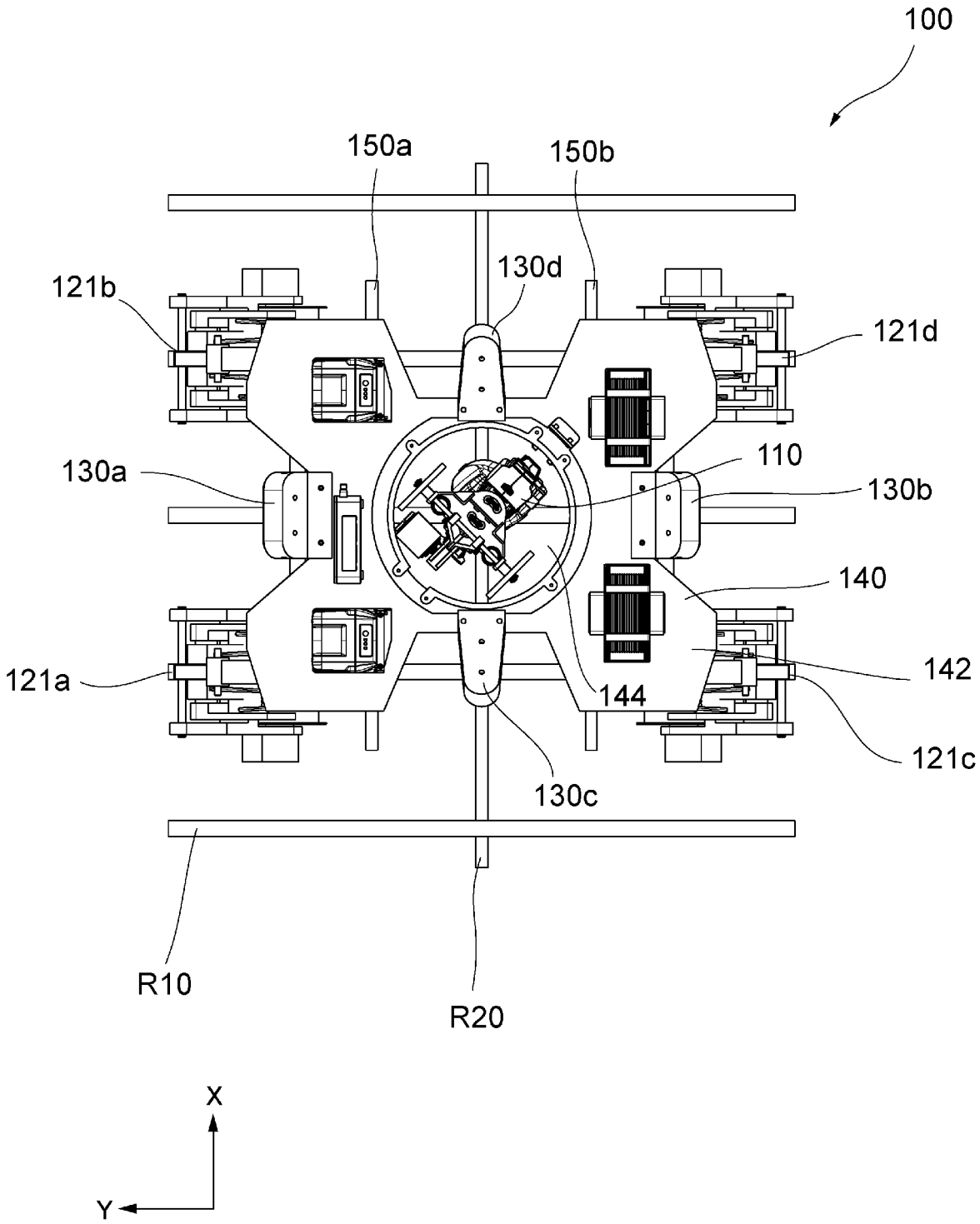
100
150a
150b
130d
121b
121d
130a
110
130b
140
121a
142
144
121c
130c
R10
R20
X
Y

FIG. 4

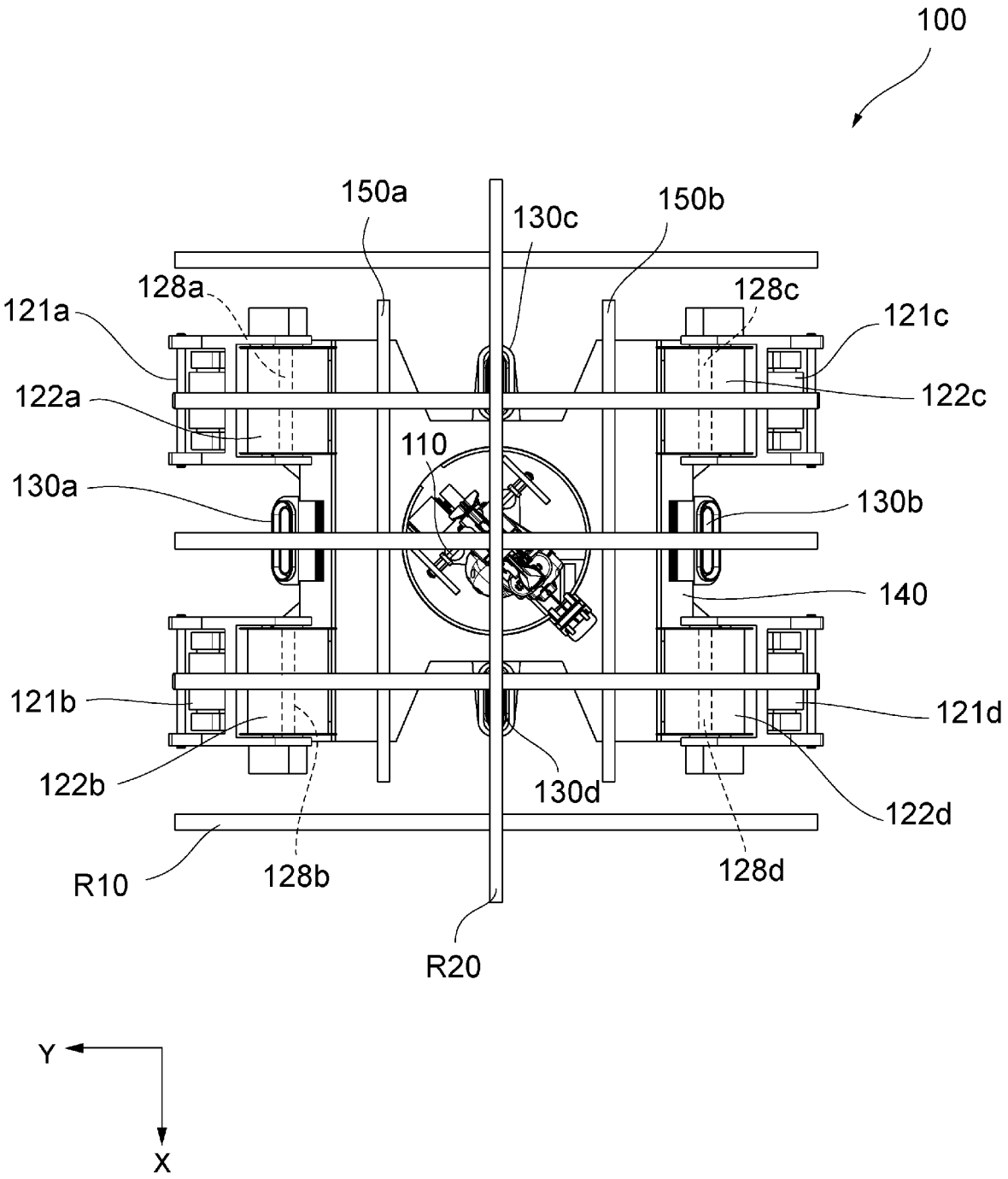
100
150a
130c
150b
128a
128c
121a
121c
122a
122c
110
130a
130b
140
121b
121d
122b
130d
122d
R10
128b
128d
R20
Y
X

FIG. 5

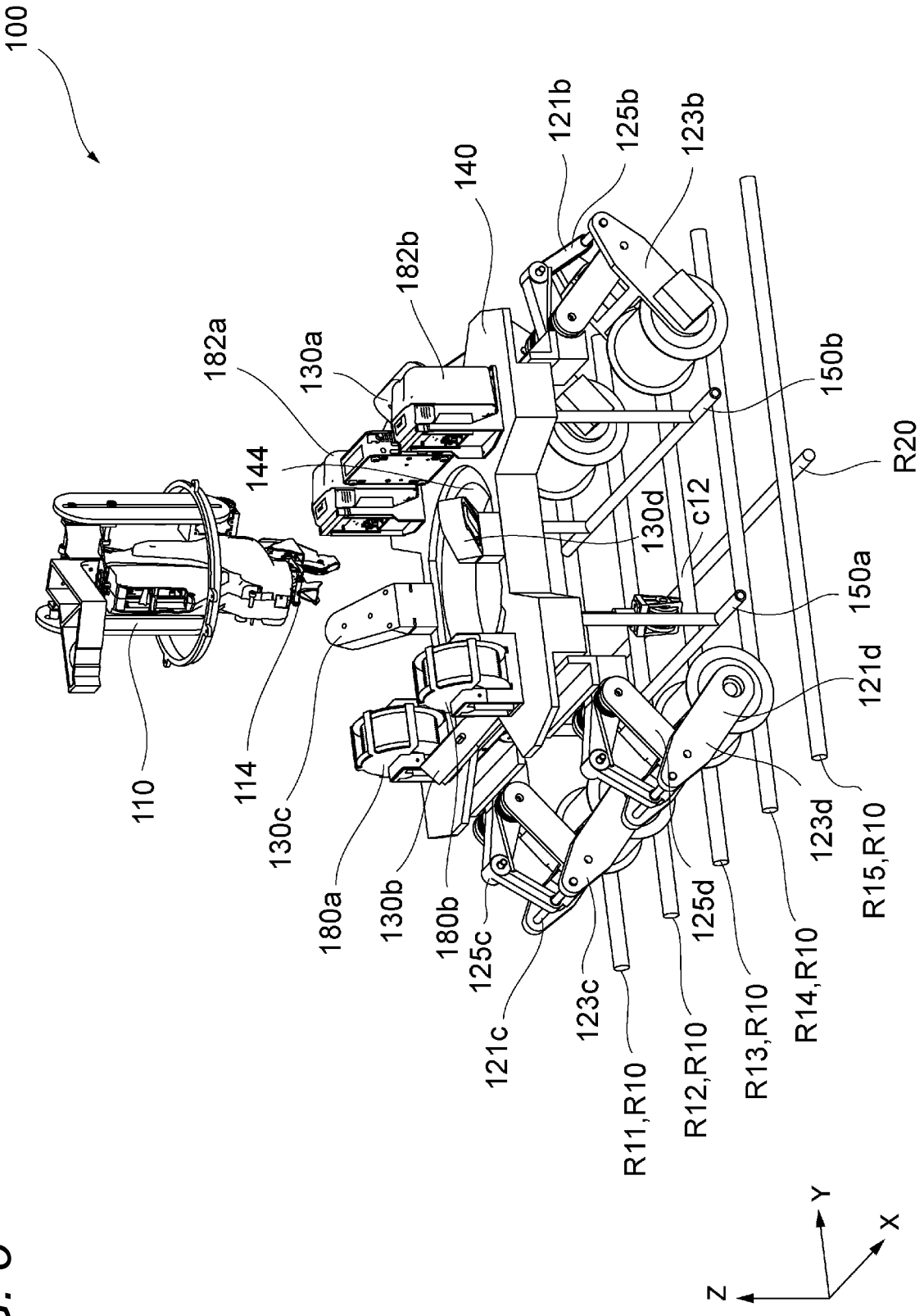
100
110
114
130c
180a
130b
180b
125c
121c
123c
R11,R10
R12,R10
125d
R13,R10
R14,R10
123d
R15,R10
121d
150a
130d
c12
R20
150b
144
182a
130a
182b
140
121b
125b
123b
Y
X
Z

FIG. 6

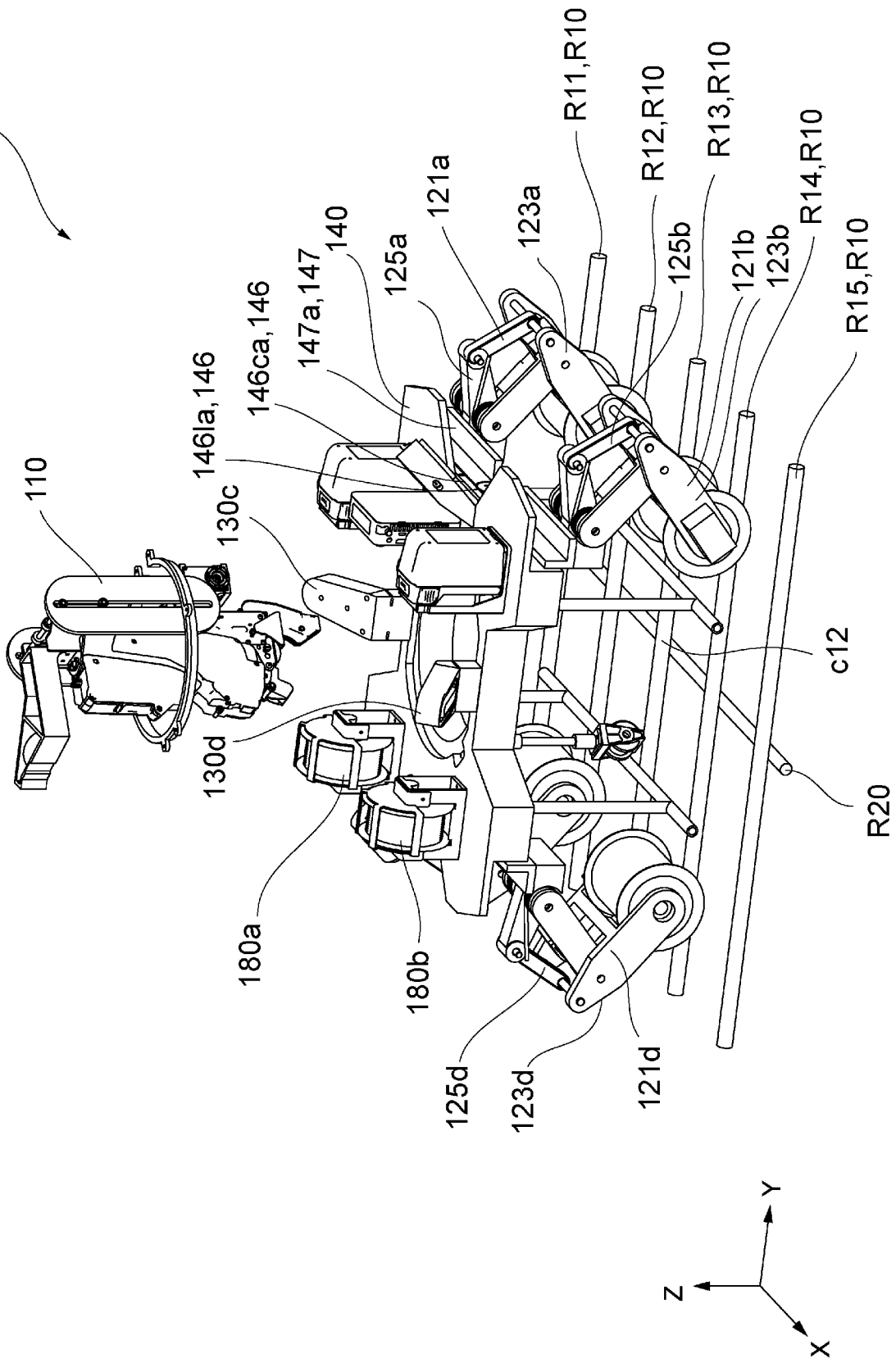
100
110
130c
146la,146
146ca,146
147a,147
140
125a
121a
123a
R11,R10
R12,R10
R13,R10
R14,R10
R15,R10
125b
121b
123b
c12
R20
130d
180a
180b
125d
123d
121d
Y
Z
X

FIG. 7

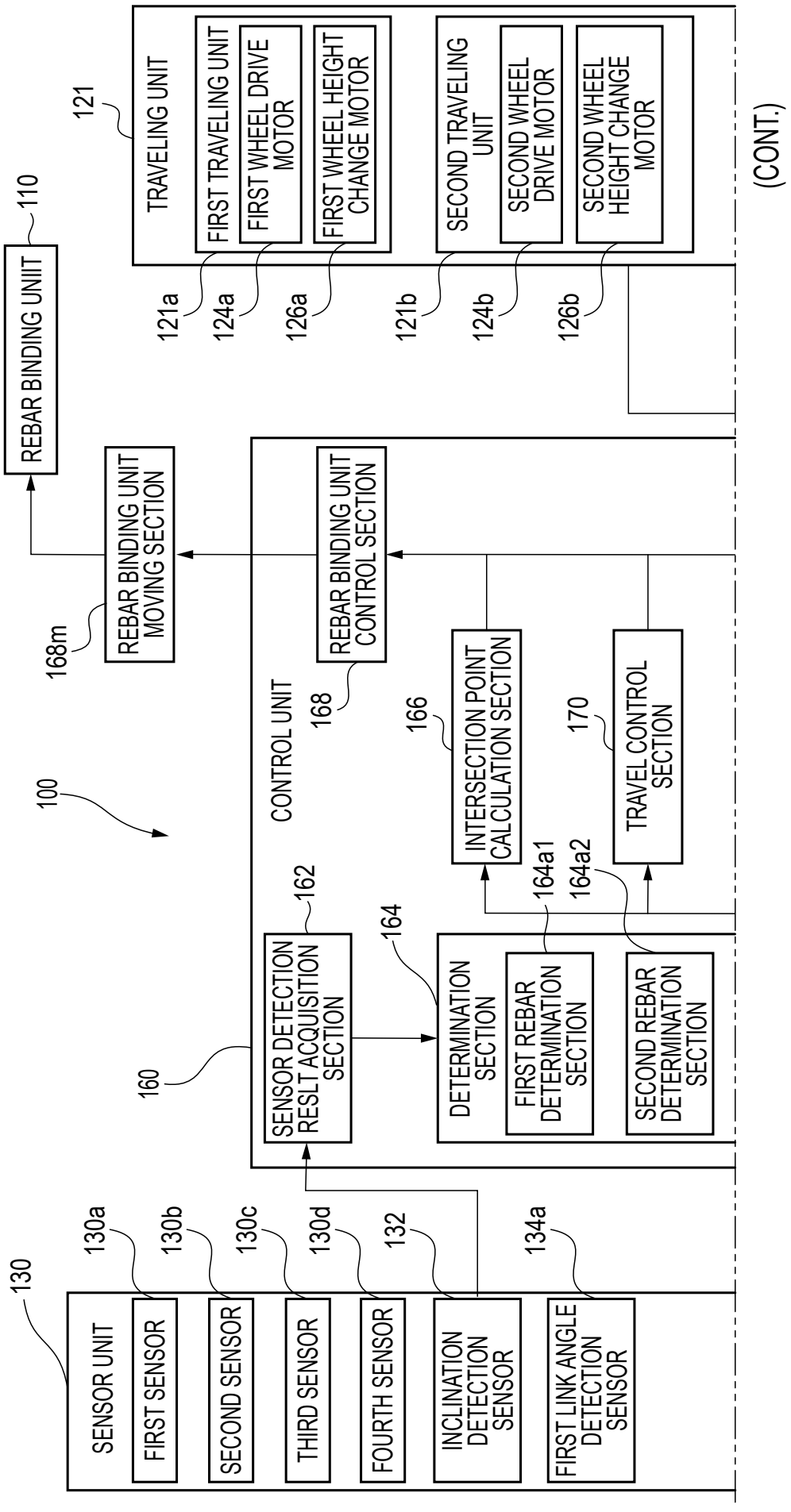
130
SENSOR UNIT
130a
FIRST SENSOR
130b
SECOND SENSOR
130c
THIRD SENSOR
130d
FOURTH SENSOR
132
INCLINATION DETECTION SENSOR
134a
FIRST LINK ANGLE DETECTION SENSOR
100
CONTROL UNIT
160
SENSOR DETECTION RESLT ACQUISITION SECTION
162
DETERMINATION SECTION
164
FIRST REBAR DETERMINATION SECTION
164a1
SECOND REBAR DETERMINATION SECTION
164a2
INTERSECTION POINT CALCULATION SECTION
166
REBAR BINDING UNIT CONTROL SECTION
168
TRAVEL CONTROL SECTION
170
REBAR BINDING UNIT MOVING SECTION
168m
REBAR BINDING UNIT
110
TRAVELING UNIT
121
FIRST TRAVELING UNIT
FIRST WHEEL DRIVE MOTOR
FIRST WHEEL HEIGHT CHANGE MOTOR
SECOND TRAVELING UNIT
SECOND WHEEL DRIVE MOTOR
SECOND WHEEL HEIGHT CHANGE MOTOR
121a
124a
126a
121b
124b
126b
(CONT.)

(FIG. 7 Continued)

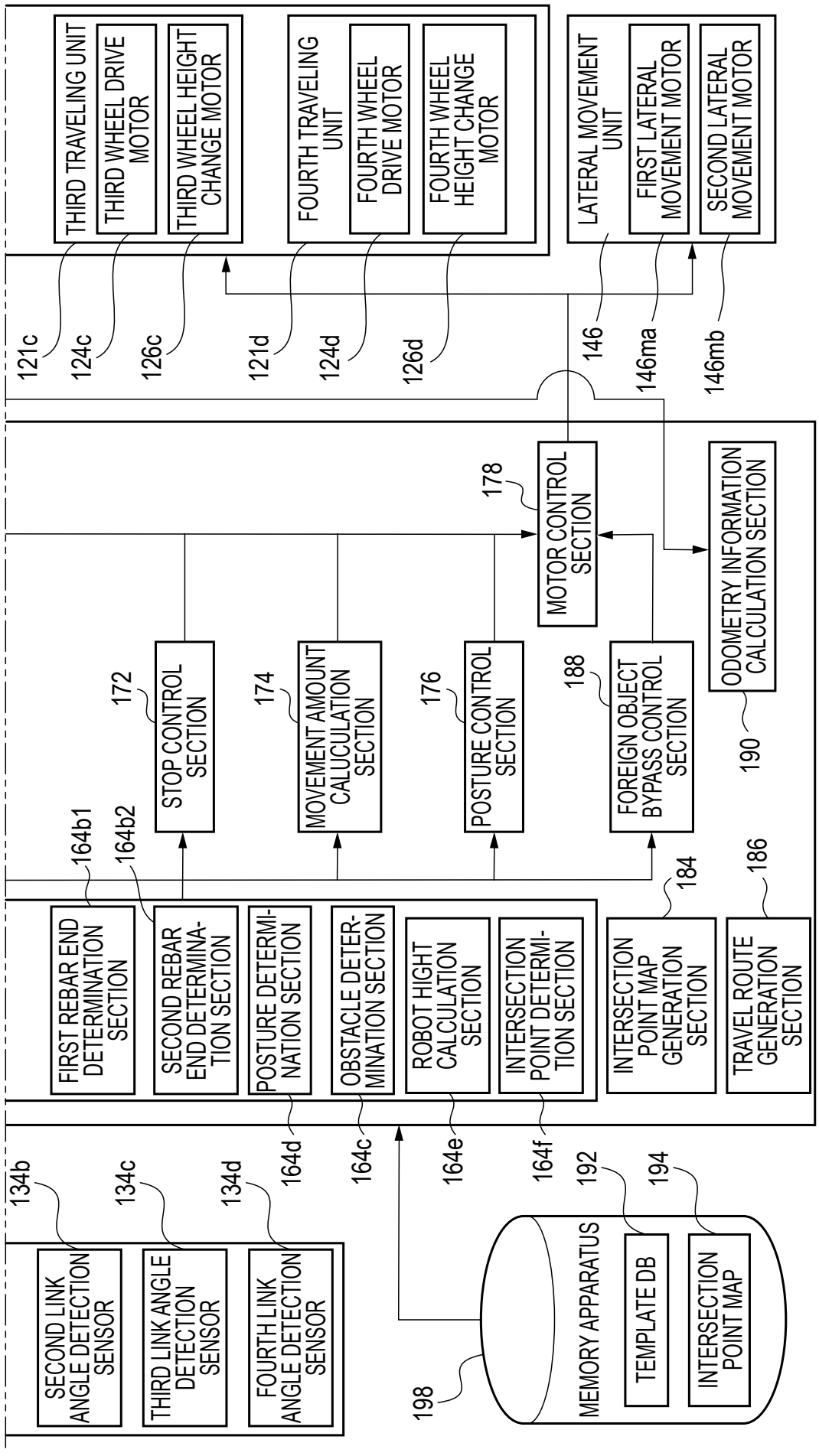

FIG. 8

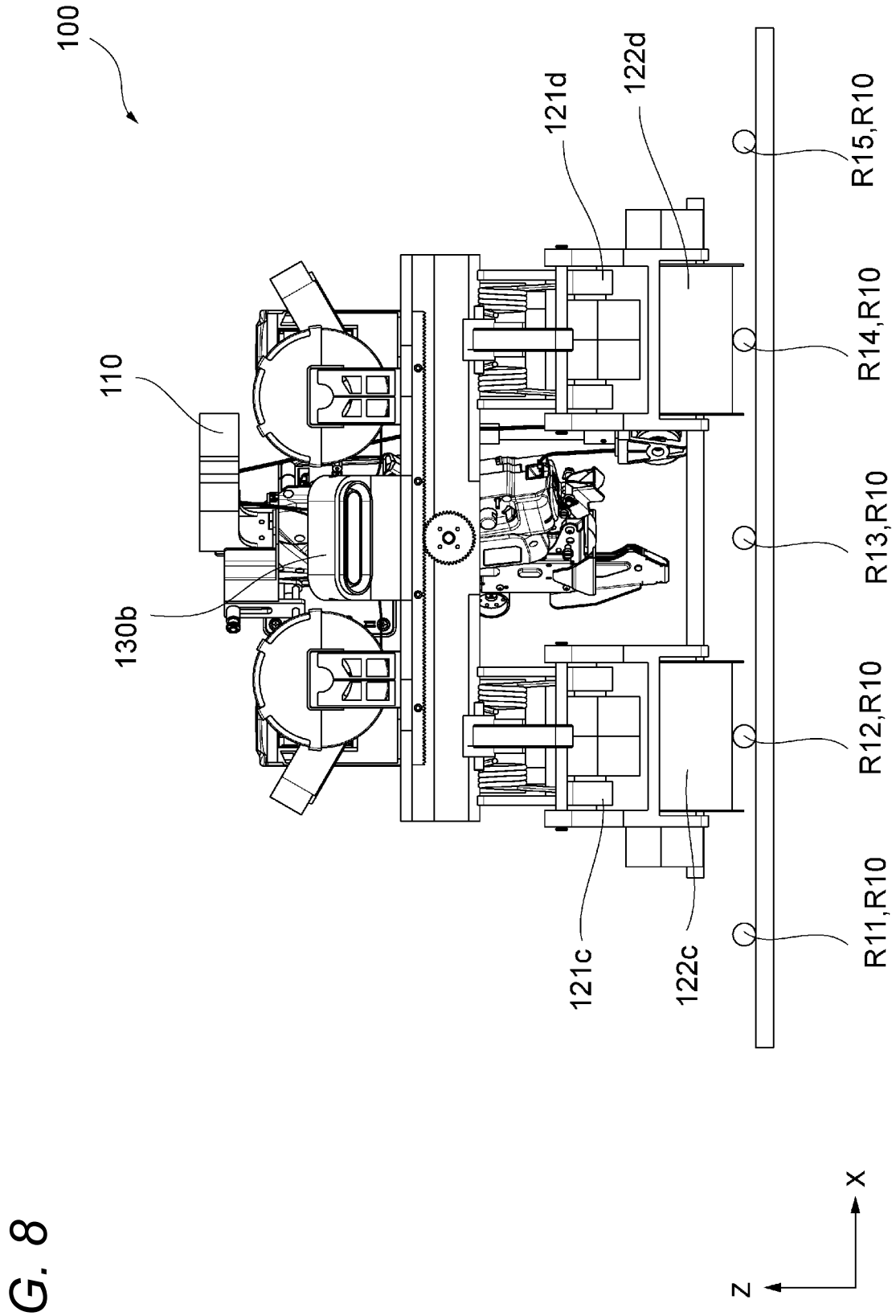
100
110
130b
121d
122d
R15,R10
R14,R10
R13,R10
R12,R10
R11,R10
121c
122c
X
Z

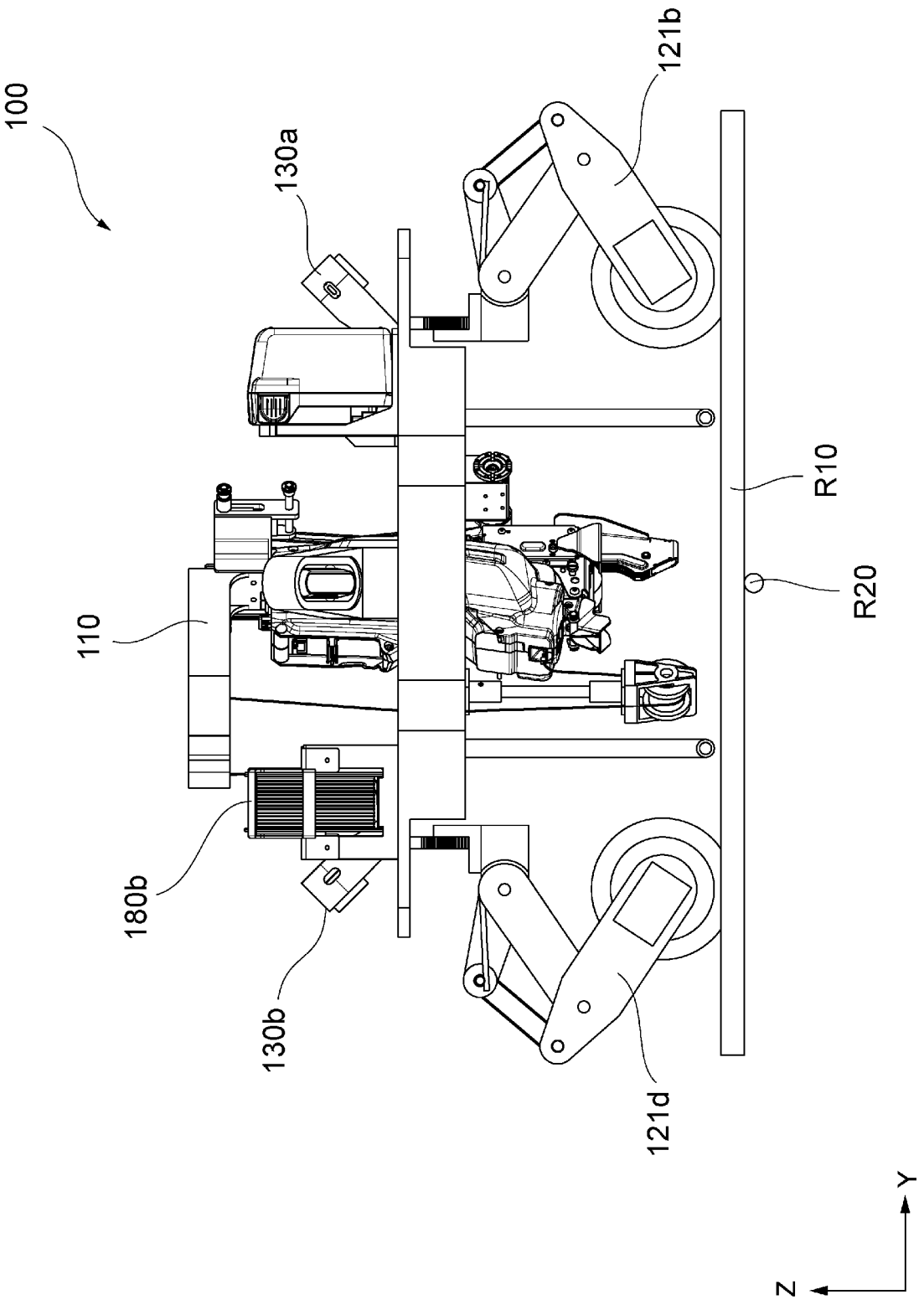

FIG. 9

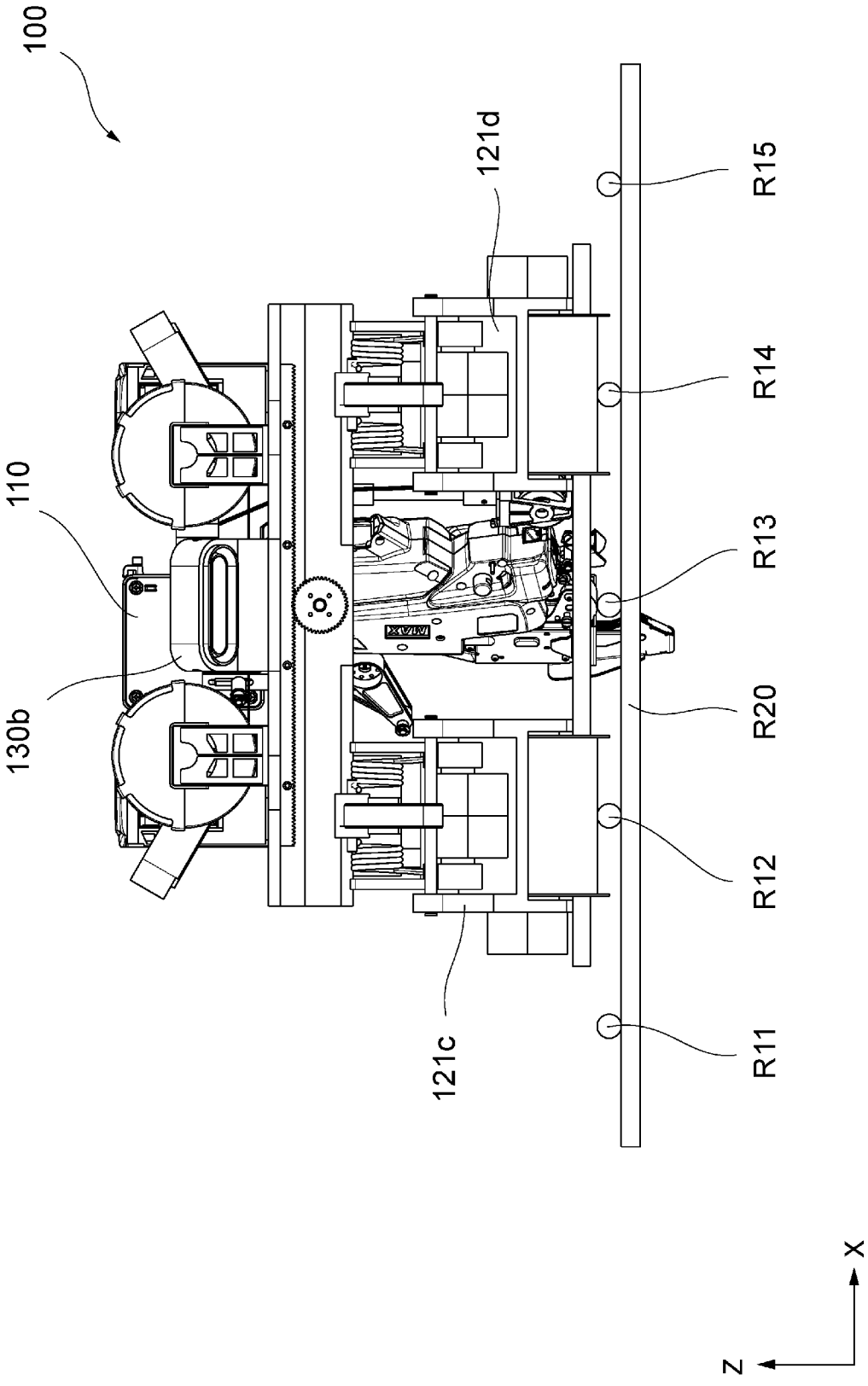

FIG. 10

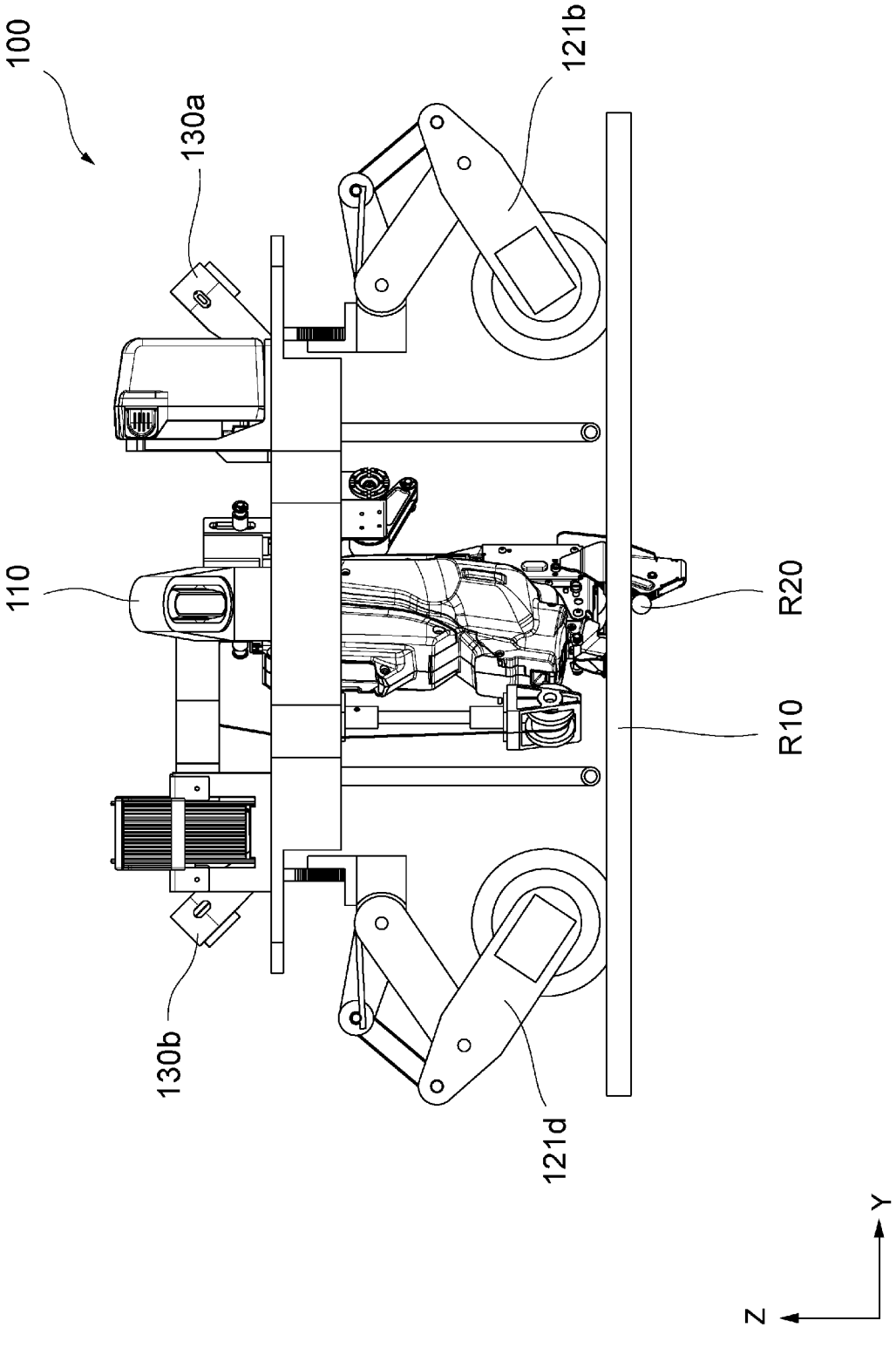

FIG. 11

FIG. 12

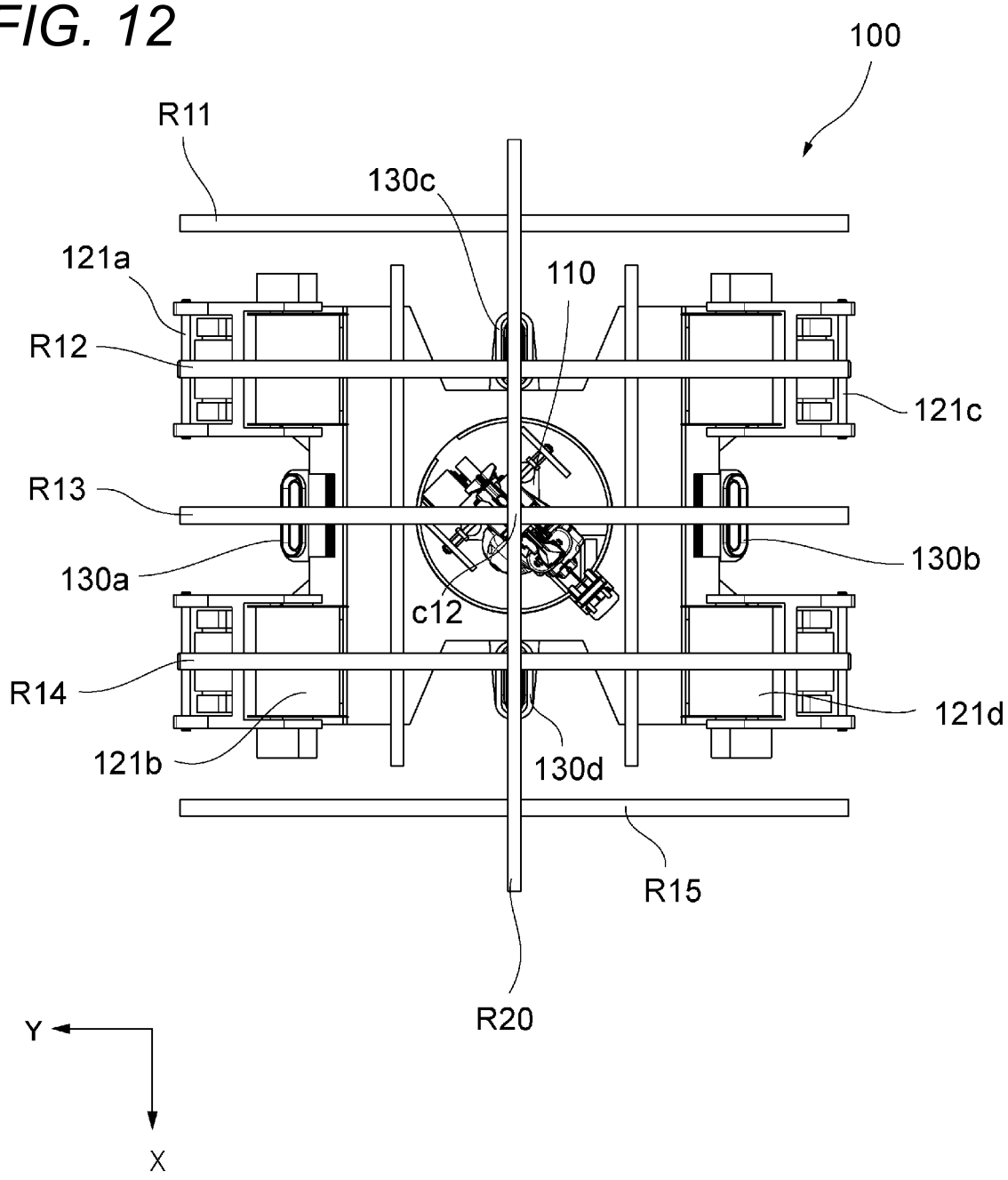

FIG. 13A

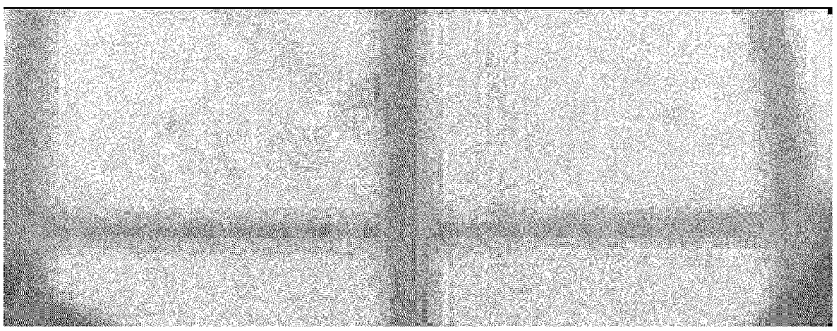

FIG. 13B

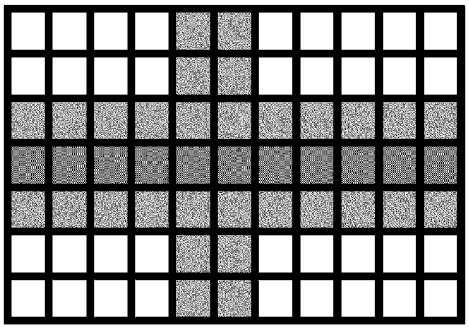

FIG. 14A

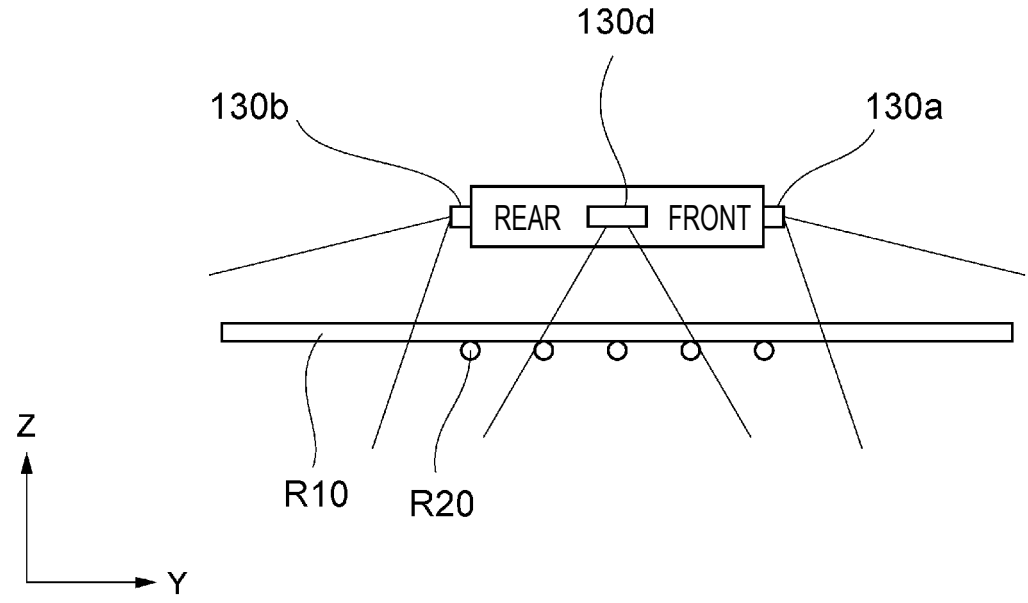

FIG. 14B

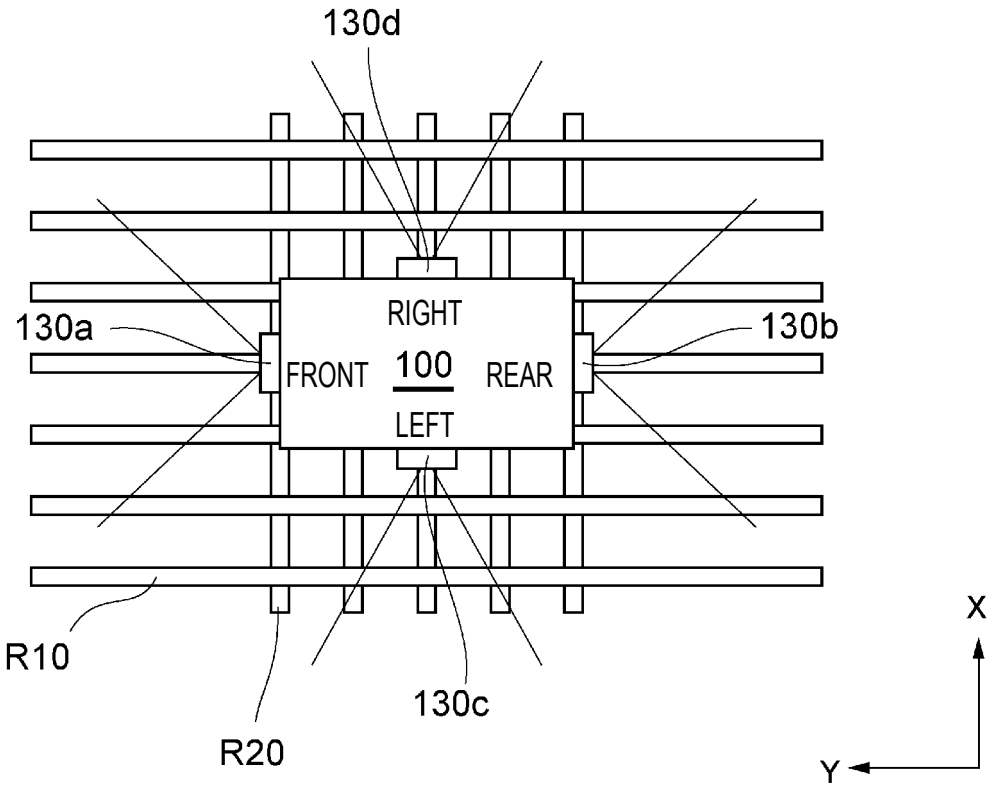

FIG. 15

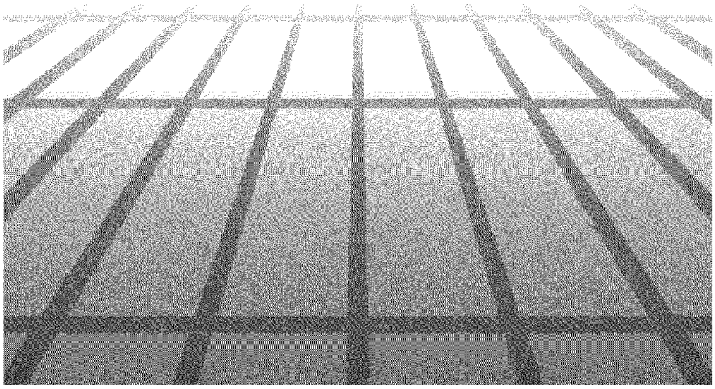

FIG. 16

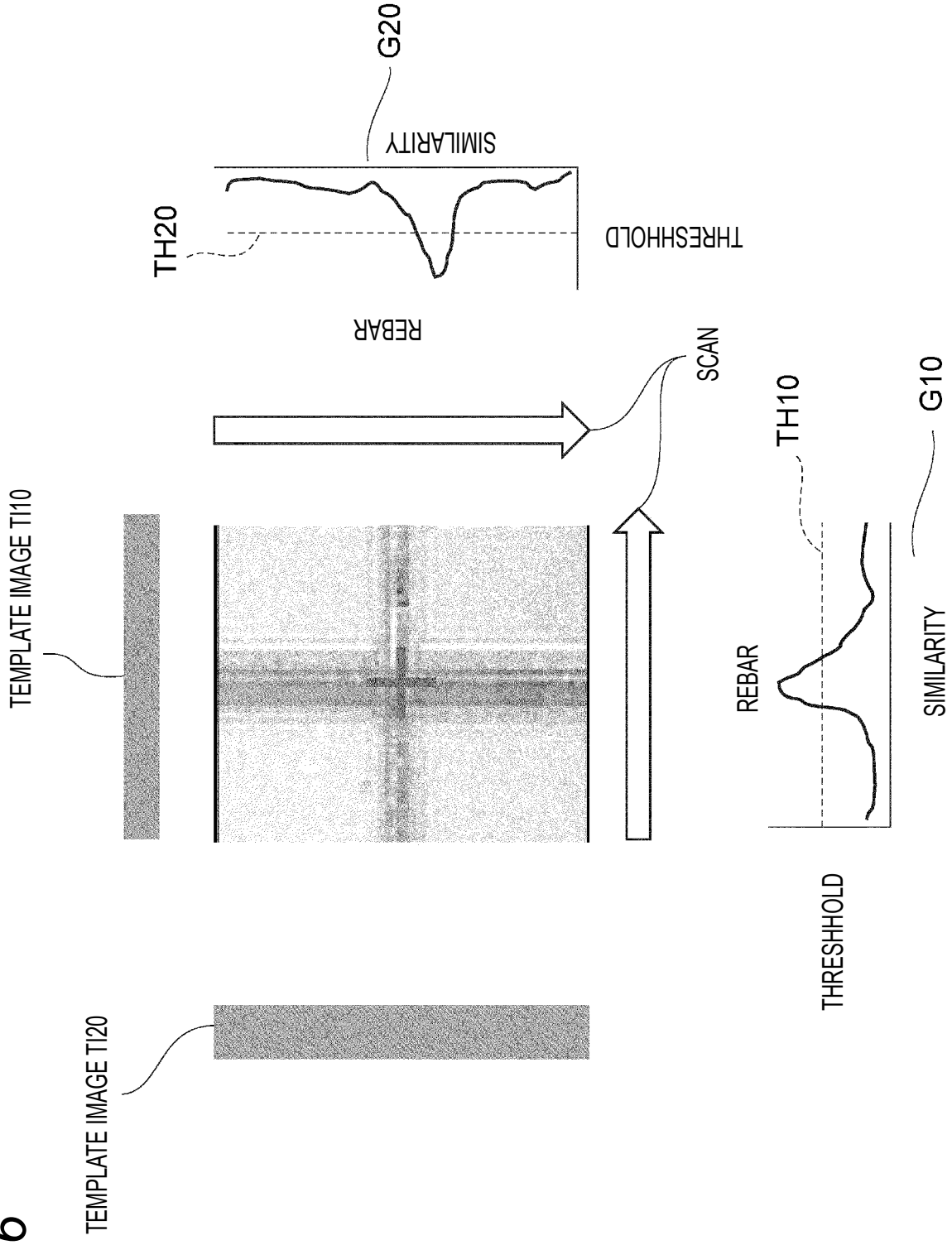
TEMPLATE IMAGE TI20
TEMPLATE IMAGE TI10
SCAN
REBAR
TH10
G10
SIMILARITY
THRESHHOLD
REBAR
TH20
G20
SIMILARITY
THRESHHOLD

FIG. 17

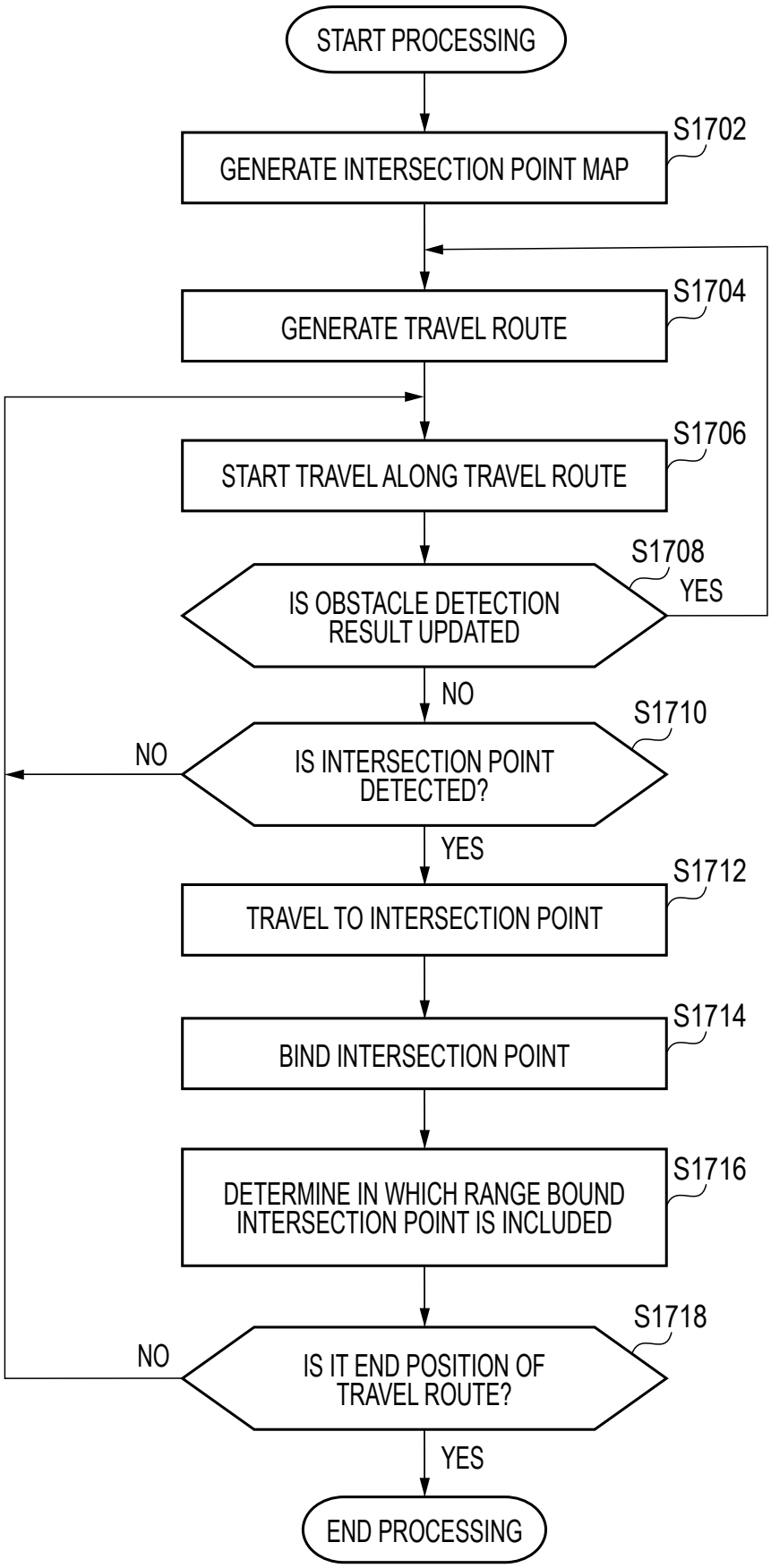
START PROCESSING
S1702
GENERATE INTERSECTION POINT MAP
S1704
GENERATE TRAVEL ROUTE
S1706
START TRAVEL ALONG TRAVEL ROUTE
S1708
IS OBSTACLE DETECTION RESULT UPDATED
YES
NO
S1710
IS INTERSECTION POINT DETECTED?
NO
YES
S1712
TRAVEL TO INTERSECTION POINT
S1714
BIND INTERSECTION POINT
S1716
DETERMINE IN WHICH RANGE BOUND INTERSECTION POINT IS INCLUDED
S1718
IS IT END POSITION OF TRAVEL ROUTE?
NO
YES
END PROCESSING

FIG. 18A

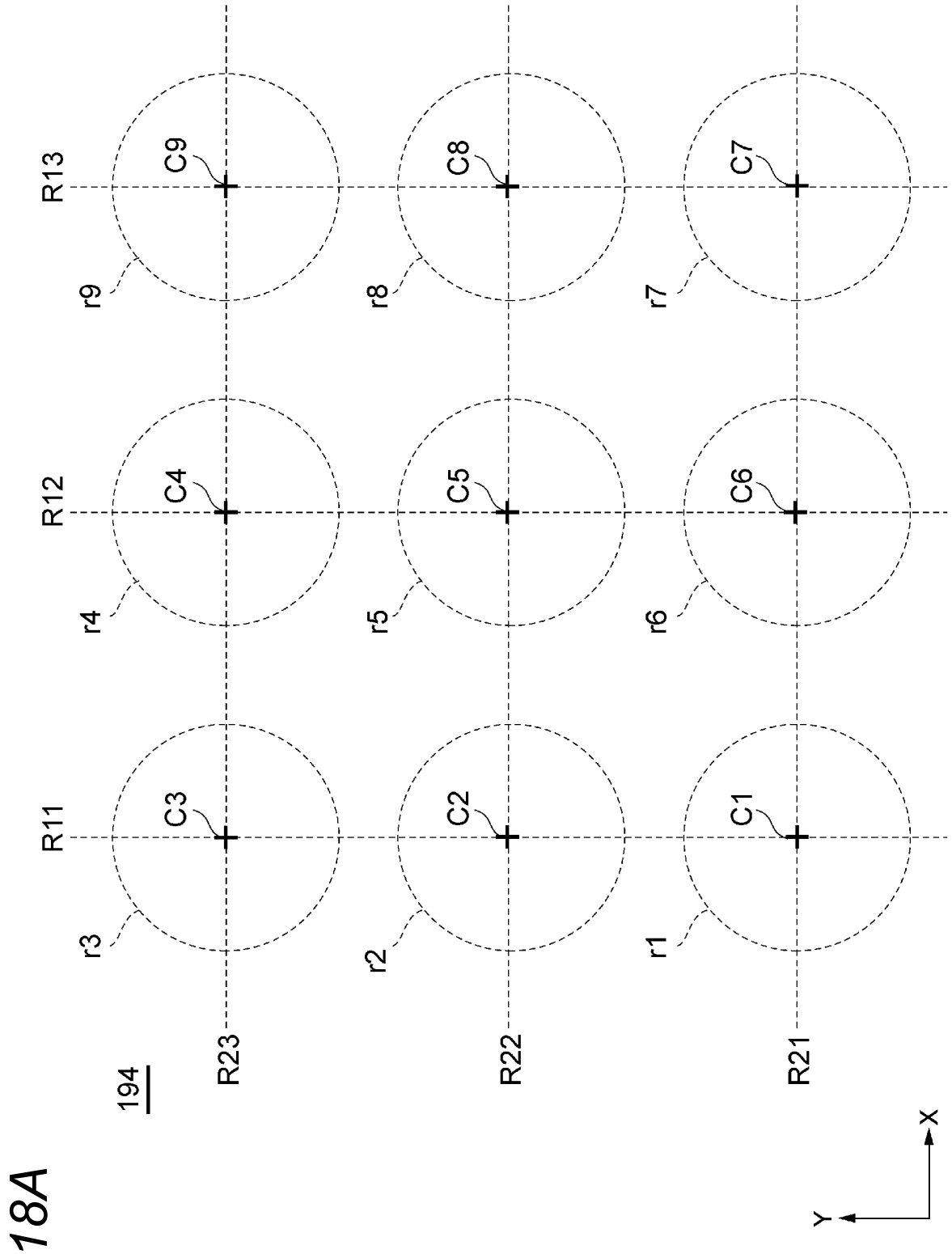
194
R11
R12
R13
R21
R22
R23
r1
r2
r3
r4
r5
r6
r7
r8
r9
C1
C2
C3
C4
C5
C6
C7
C8
C9
X
Y

FIG. 18B

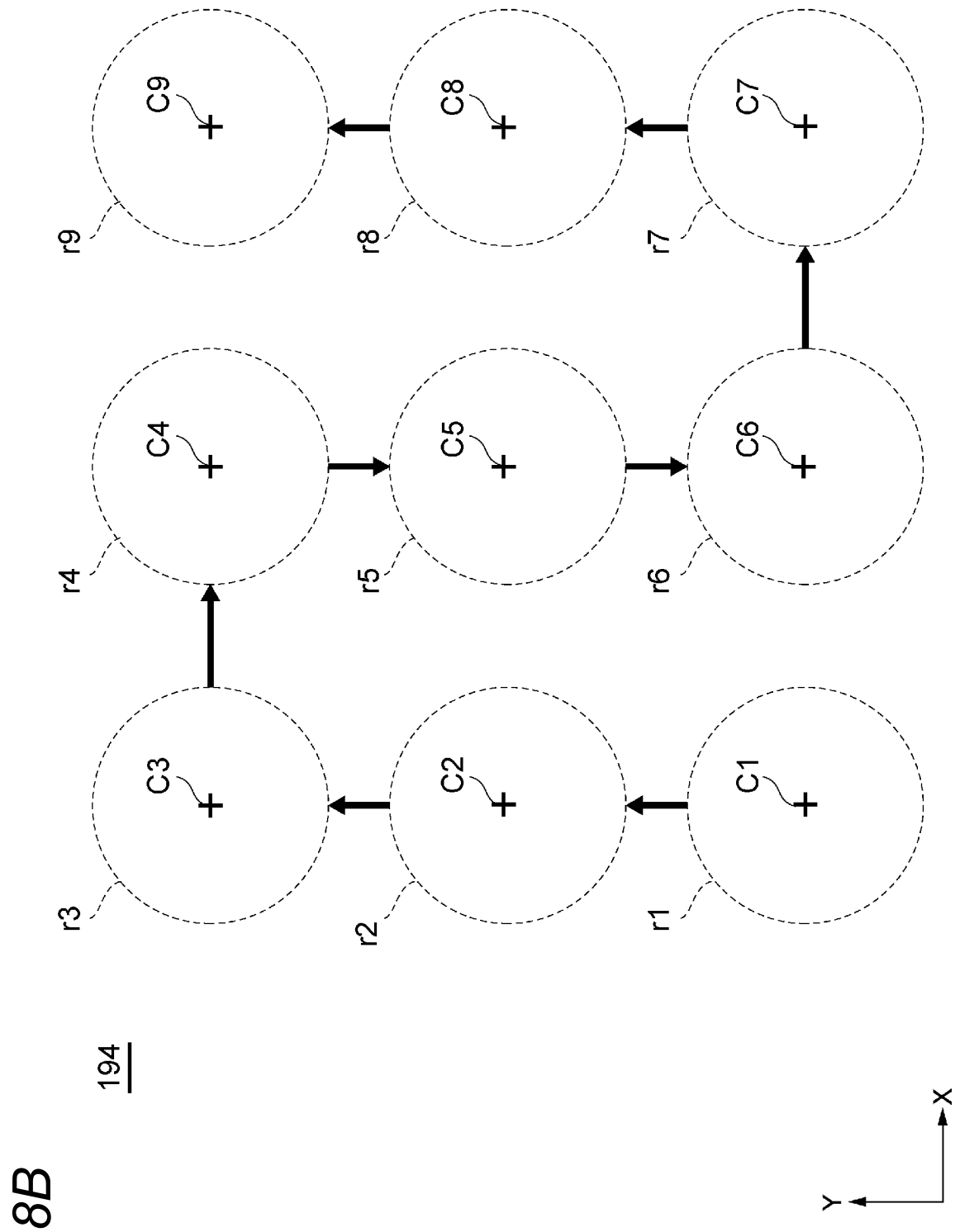

FIG. 18C

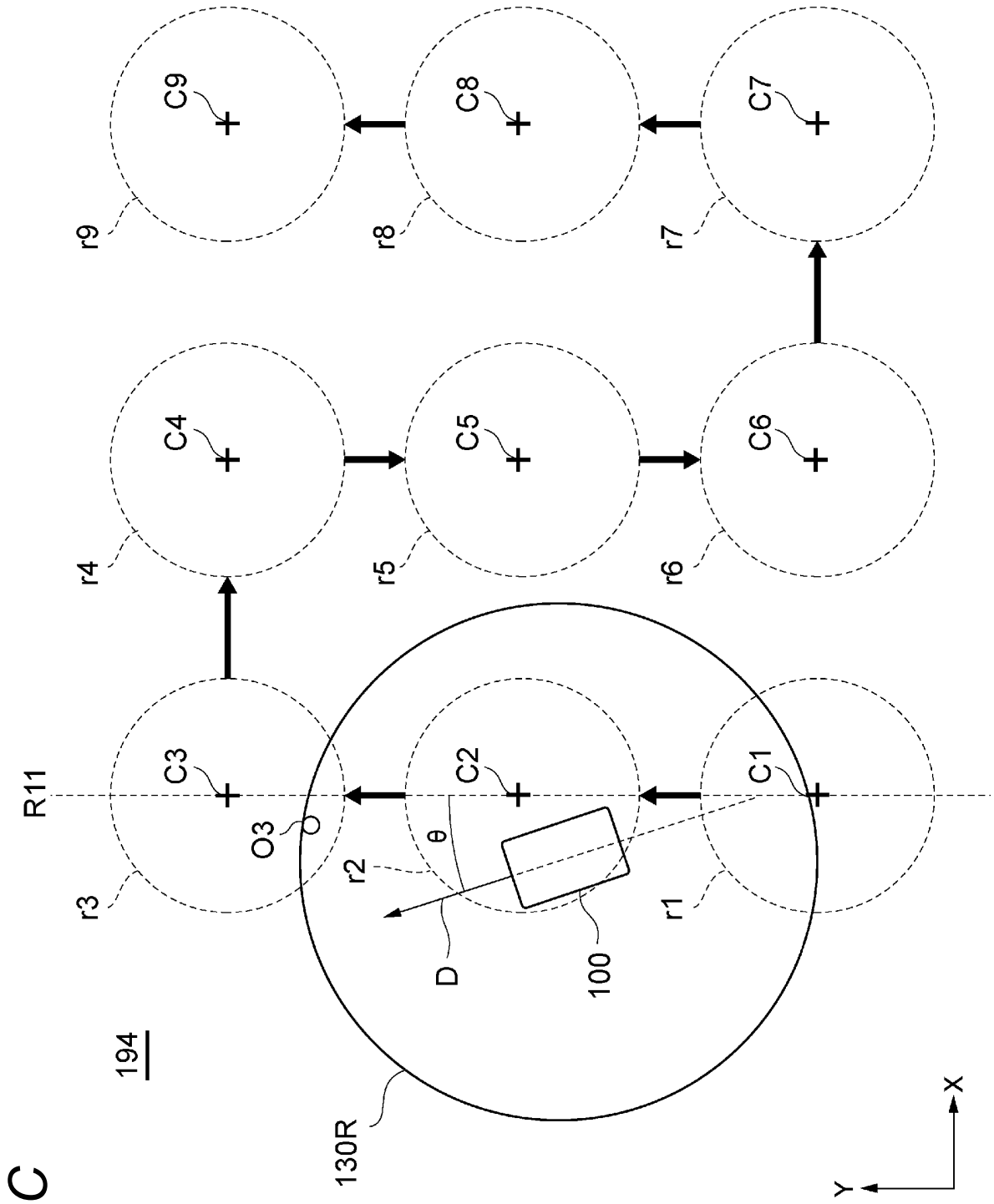
194
130R
R11
C1
C2
C3
C4
C5
C6
C7
C8
C9
r1
r2
r3
r4
r5
r6
r7
r8
r9
O3
θ
D
100
X
Y

FIG. 18D

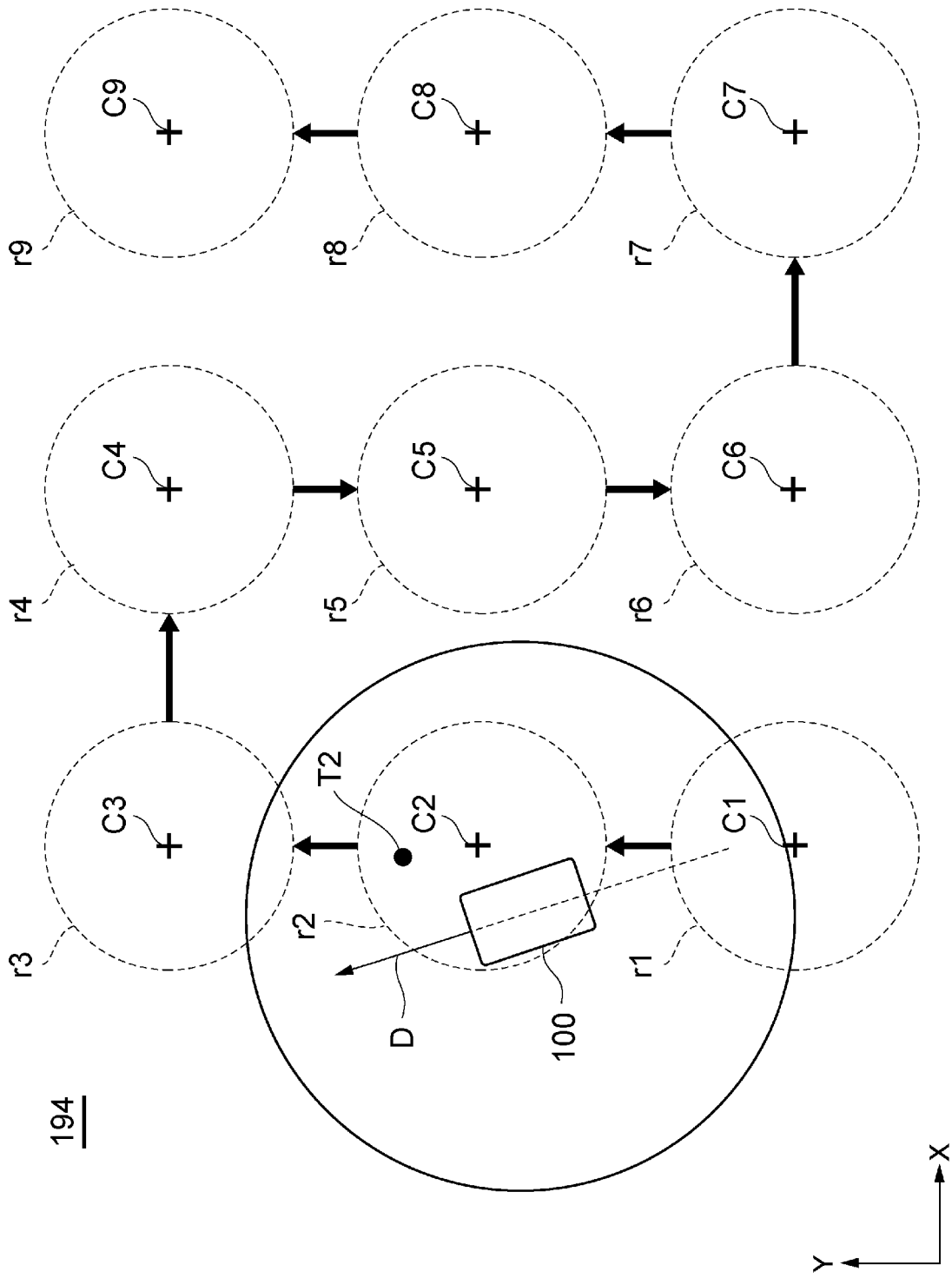

FIG. 18E

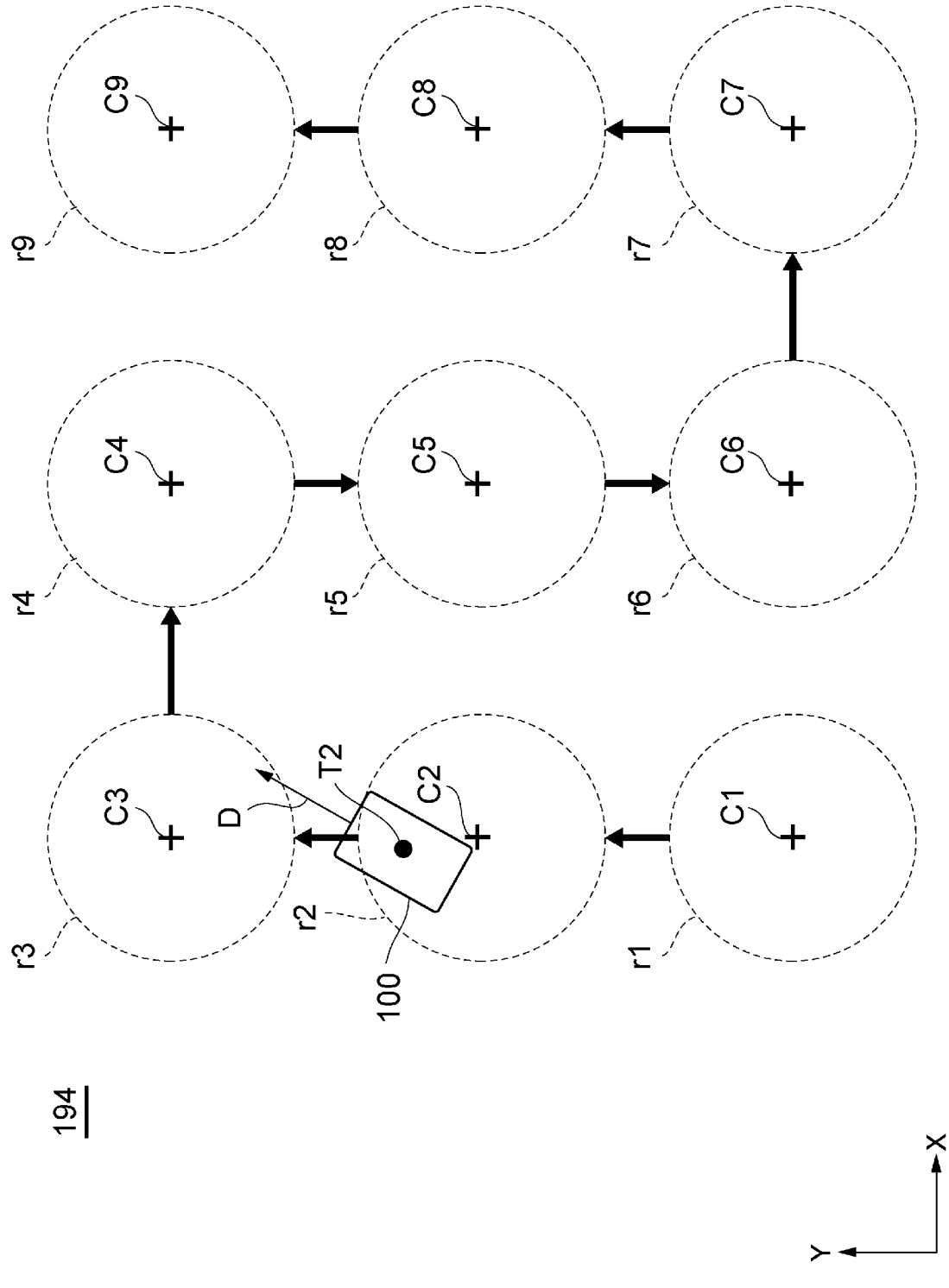

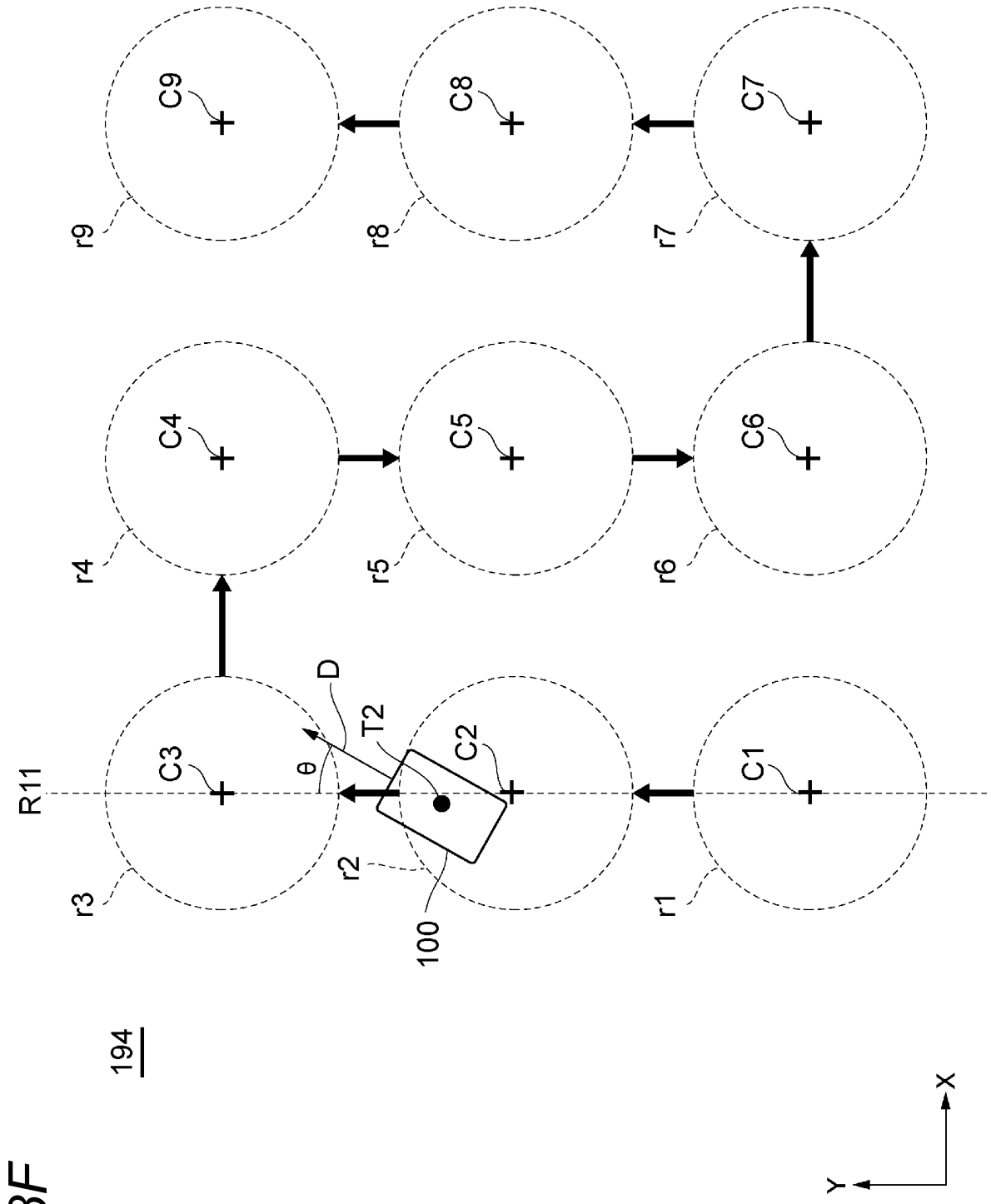
194
R11
C1
C2
C3
C4
C5
C6
C7
C8
C9
r1
r2
r3
r4
r5
r6
r7
r8
r9
100
T2
D
θ
X
Y

FIG. 18F

FIG. 19

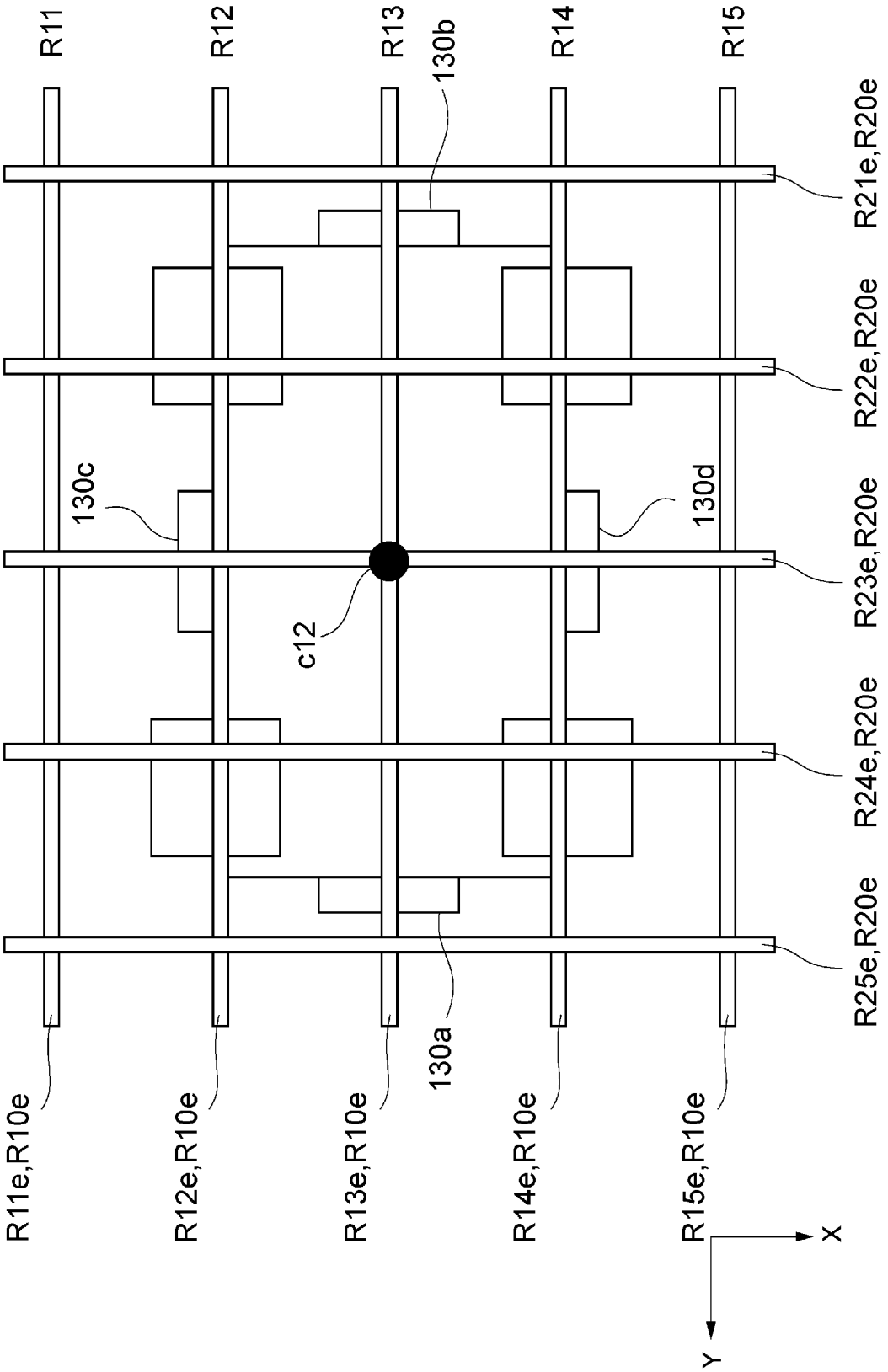
R11
R12
R13
R14
R15
130b
R21
R22
R23
R24
R25
R21e,R20e
R22e,R20e
R23e,R20e
R24e,R20e
R25e,R20e
130c
130d
c12
130a
R11e,R10e
R12e,R10e
R13e,R10e
R14e,R10e
R15e,R10e
X
Y

FIG. 20

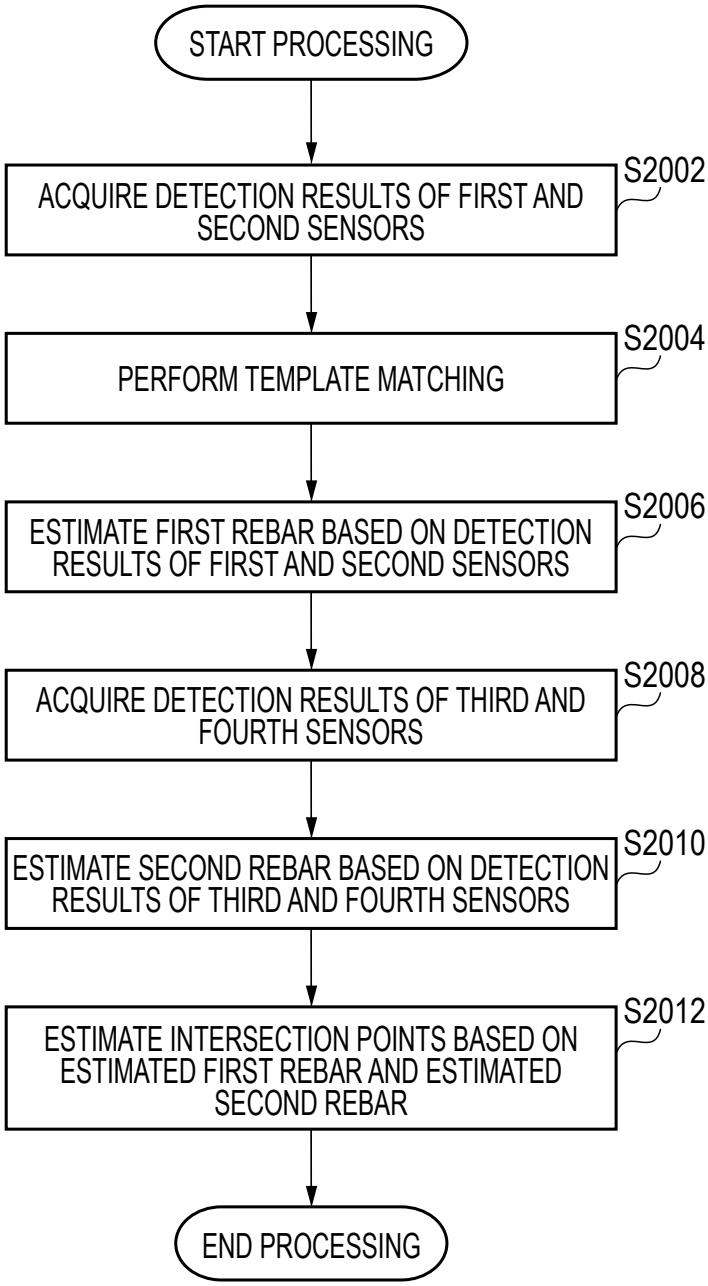
START PROCESSING
ACQUIRE DETECTION RESULTS OF FIRST AND SECOND SENSORS
S2002
PERFORM TEMPLATE MATCHING
S2004
ESTIMATE FIRST REBAR BASED ON DETECTION RESULTS OF FIRST AND SECOND SENSORS
S2006
ACQUIRE DETECTION RESULTS OF THIRD AND FOURTH SENSORS
S2008
ESTIMATE SECOND REBAR BASED ON DETECTION RESULTS OF THIRD AND FOURTH SENSORS
S2010
ESTIMATE INTERSECTION POINTS BASED ON ESTIMATED FIRST REBAR AND ESTIMATED SECOND REBAR
S2012
END PROCESSING

FIG. 21

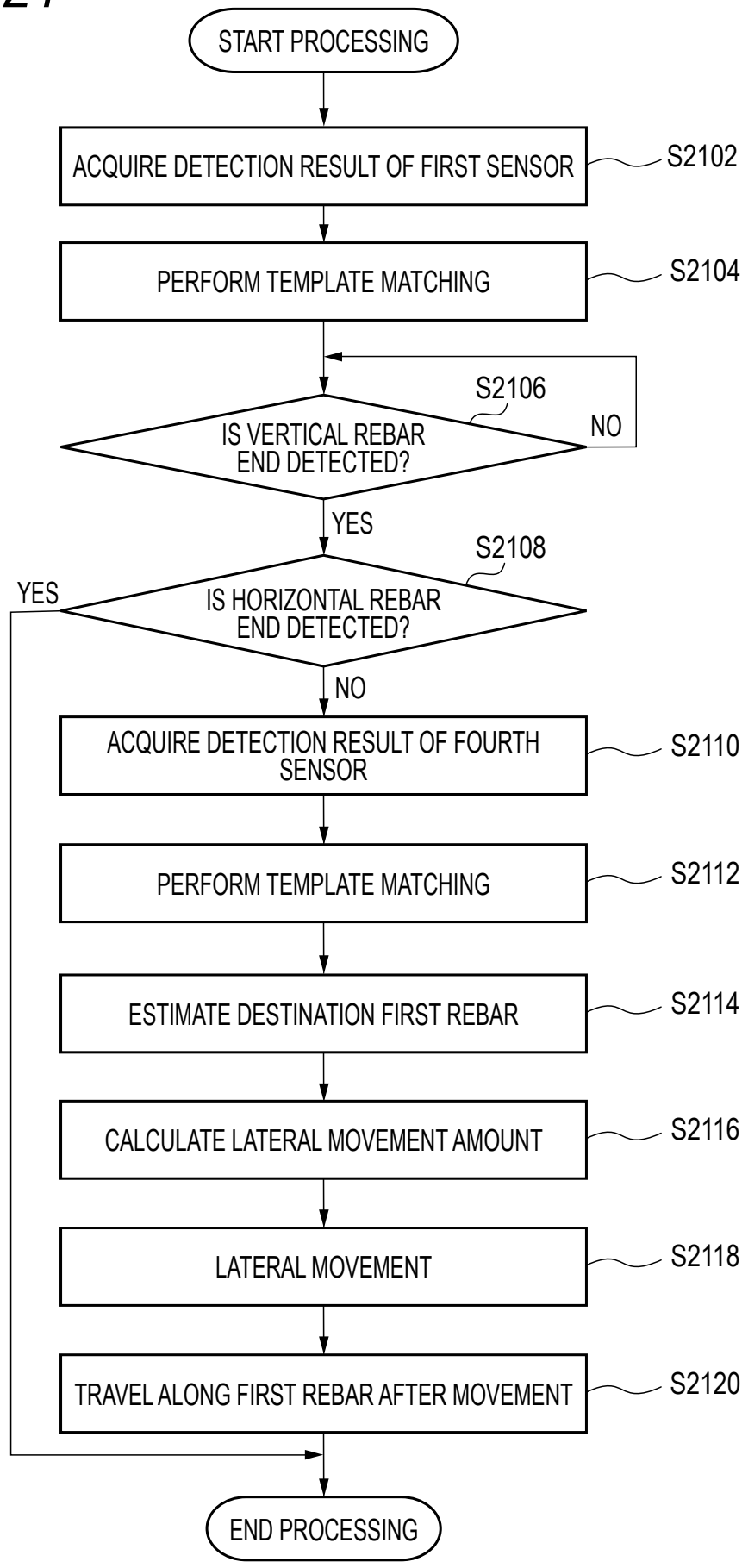
START PROCESSING
ACQUIRE DETECTION RESULT OF FIRST SENSOR
S2102
PERFORM TEMPLATE MATCHING
S2104
S2106
IS VERTICAL REBAR END DETECTED?
NO
YES
S2108
IS HORIZONTAL REBAR END DETECTED?
YES
NO
ACQUIRE DETECTION RESULT OF FOURTH SENSOR
S2110
PERFORM TEMPLATE MATCHING
S2112
ESTIMATE DESTINATION FIRST REBAR
S2114
CALCULATE LATERAL MOVEMENT AMOUNT
S2116
LATERAL MOVEMENT
S2118
TRAVEL ALONG FIRST REBAR AFTER MOVEMENT
S2120
END PROCESSING

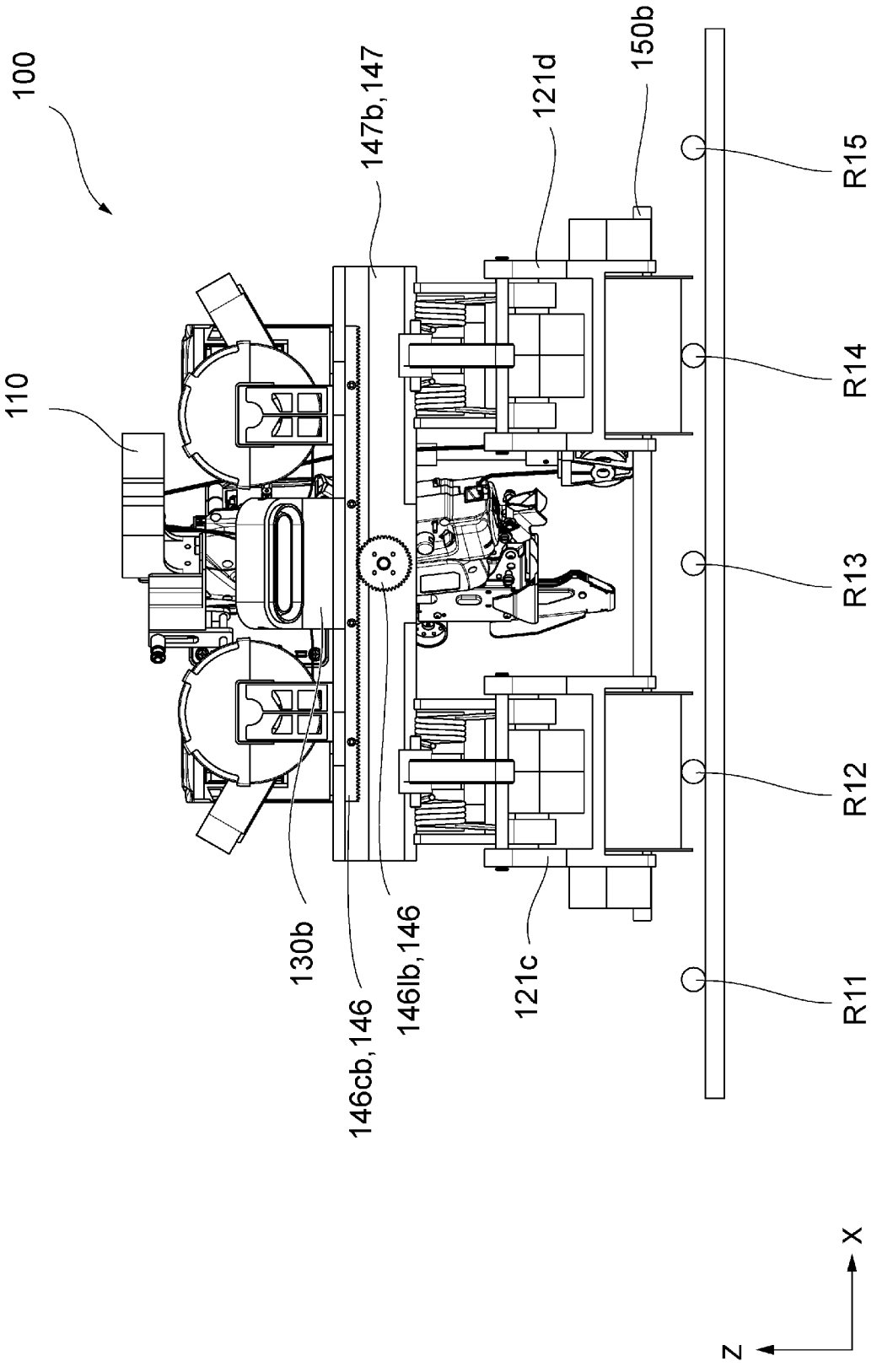
100
110
147b,147
121d
150b
R15
R14
R13
R12
R11
130b
146cb,146
146lb,146
121c
X
Z

FIG. 22A

FIG. 22B

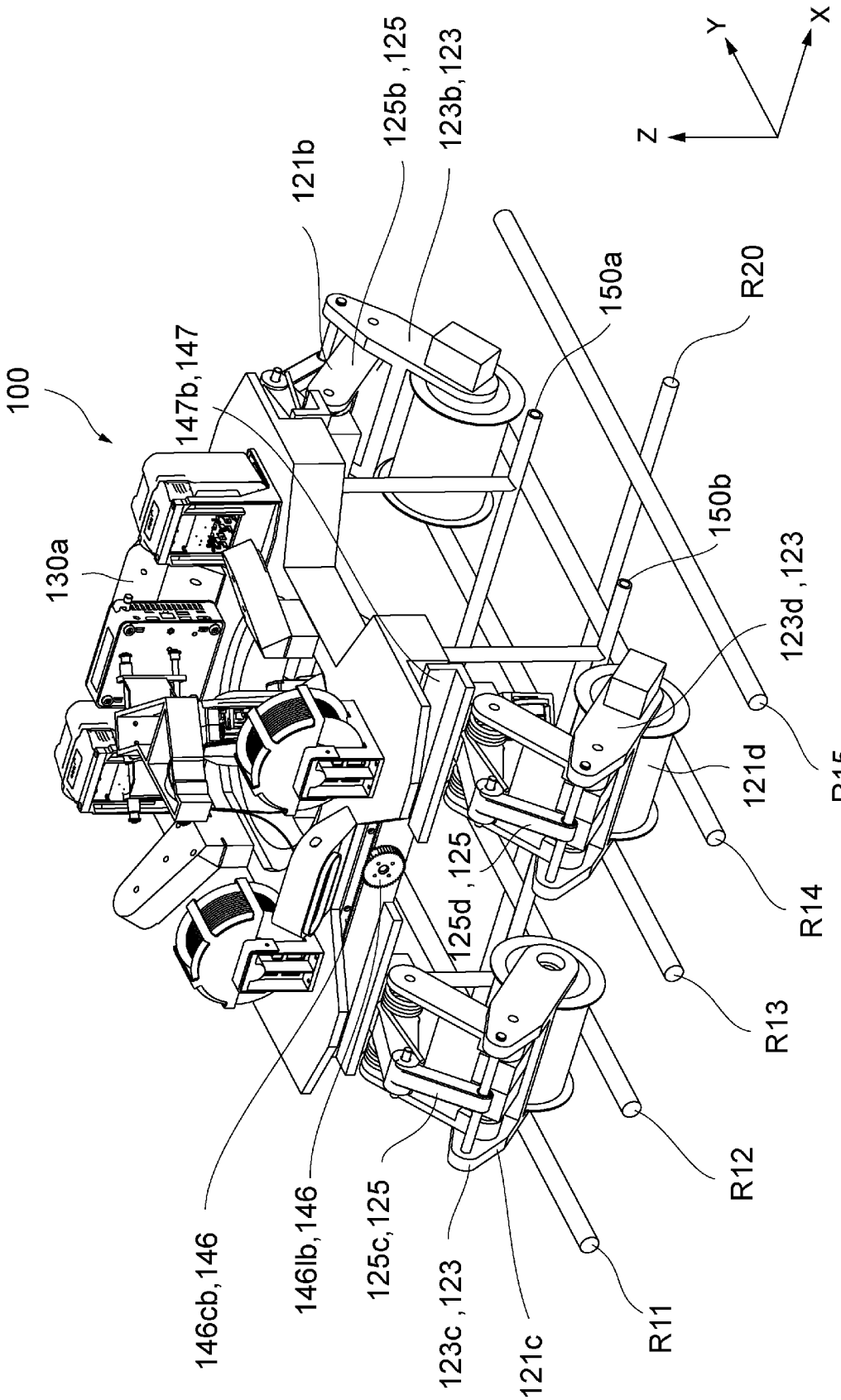
100
130a
147b,147
121b
125b ,125
123b,123
150a
R20
150b
123d ,123
121d
R15
R14
R13
R12
R11
125d ,125
123c ,123
121c
125c,125
146lb,146
146cb,146
Z
Y
X

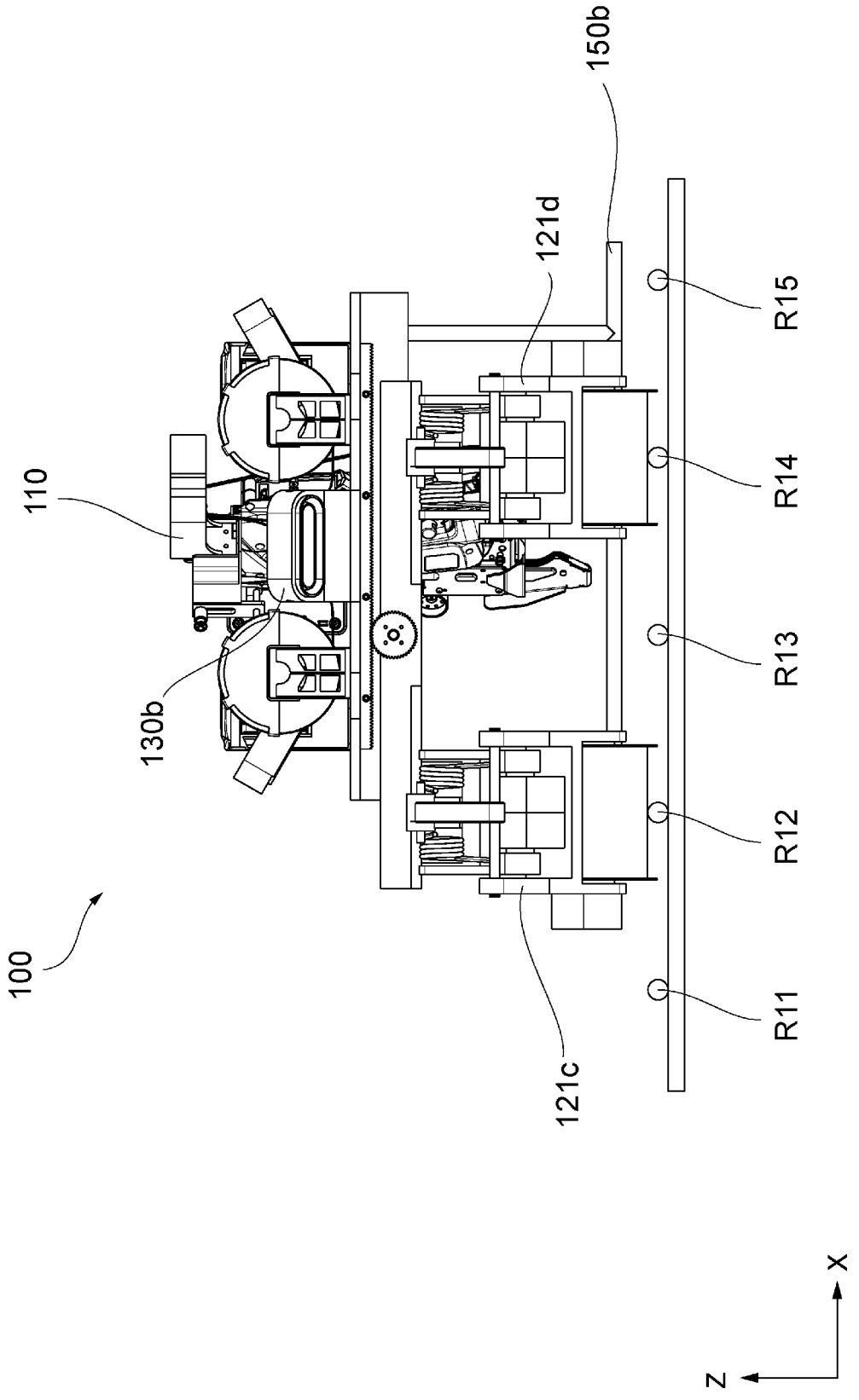

FIG. 23A

FIG. 23B

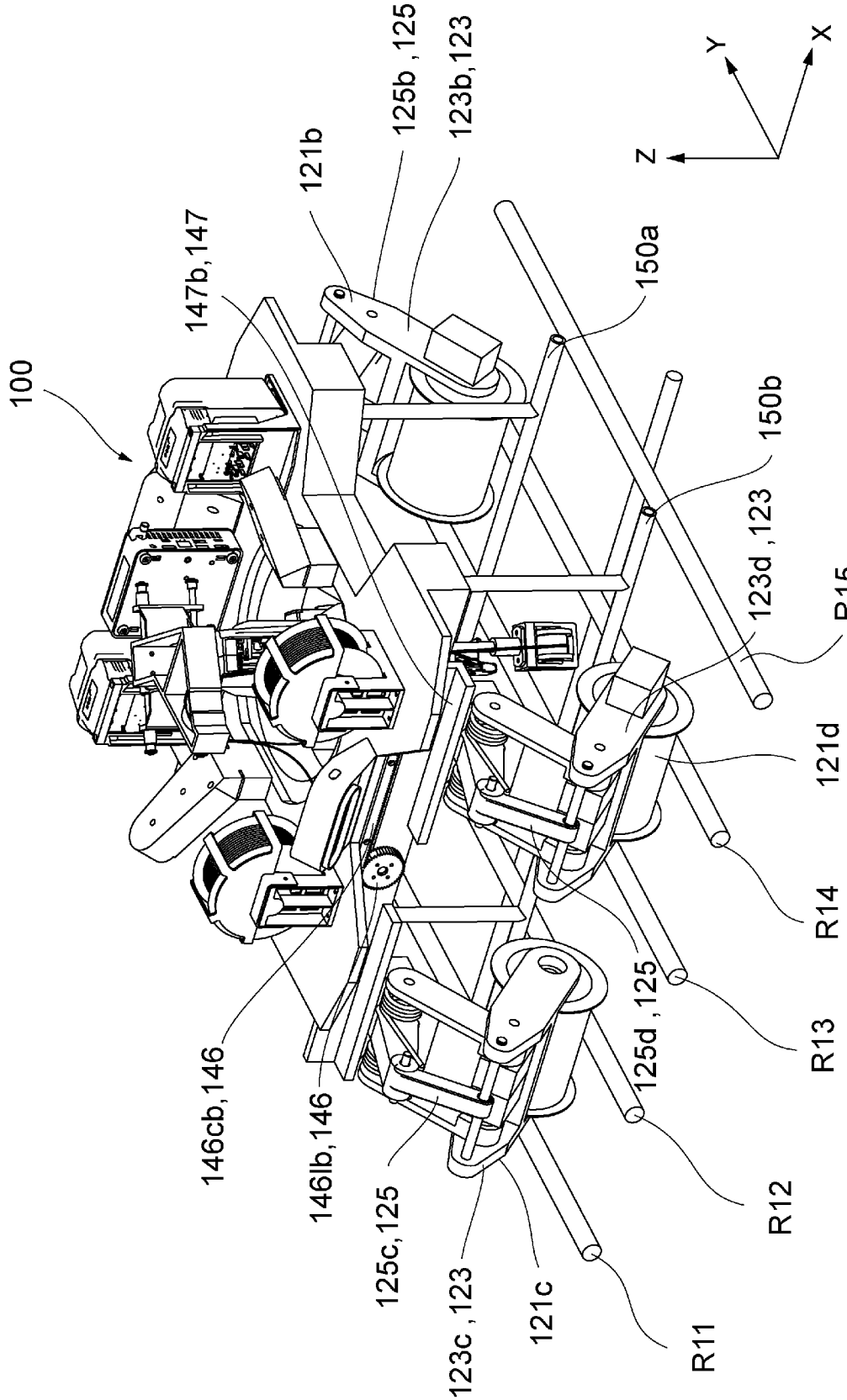
100
147b,147
121b
125b ,125
123b,123
150a
150b
123d ,123
R15
121d
R14
125d ,125
R13
R12
R11
121c
123c ,123
125c,125
146lb,146
146cb,146
Z
Y
X

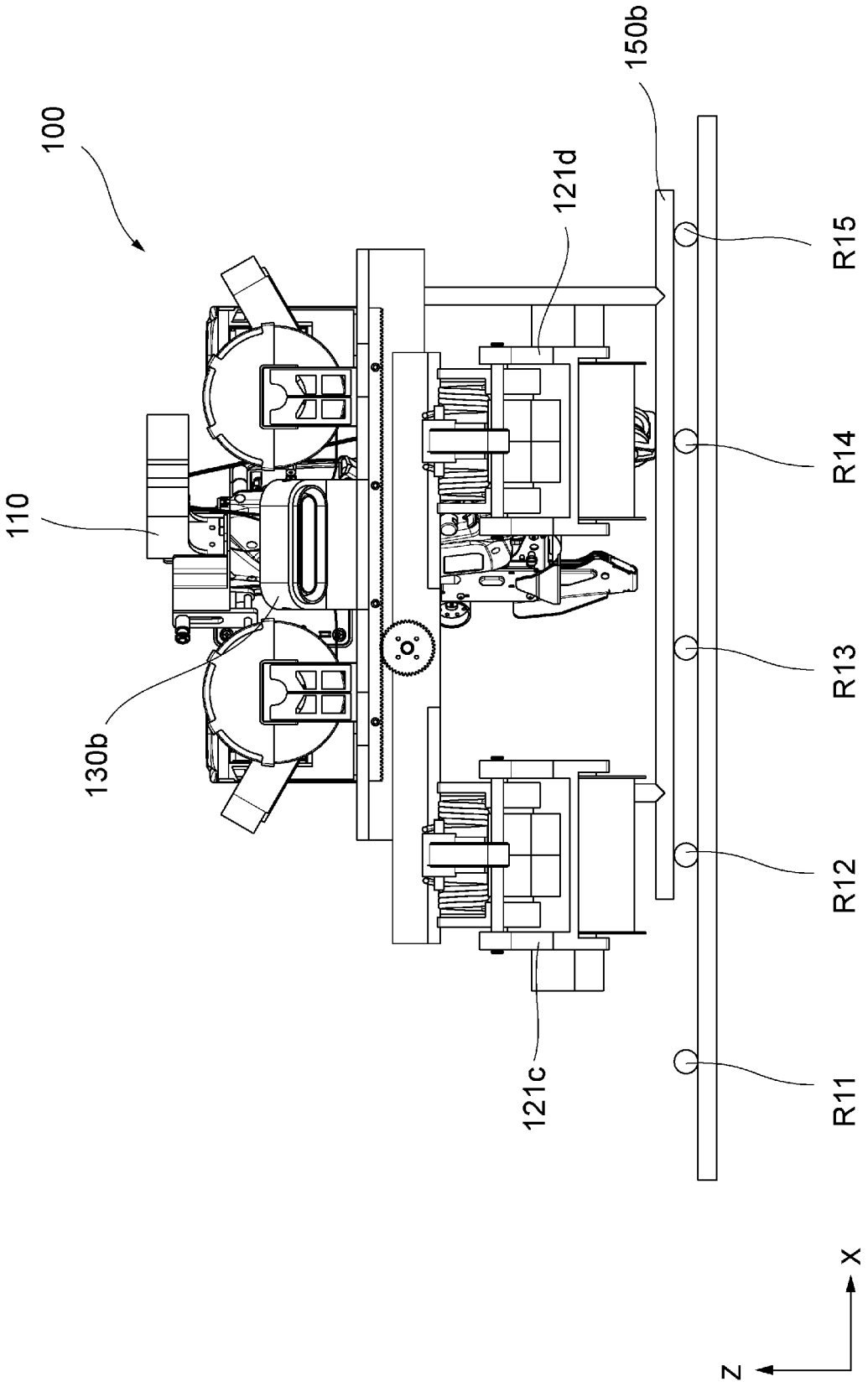

FIG. 24A

FIG. 24B

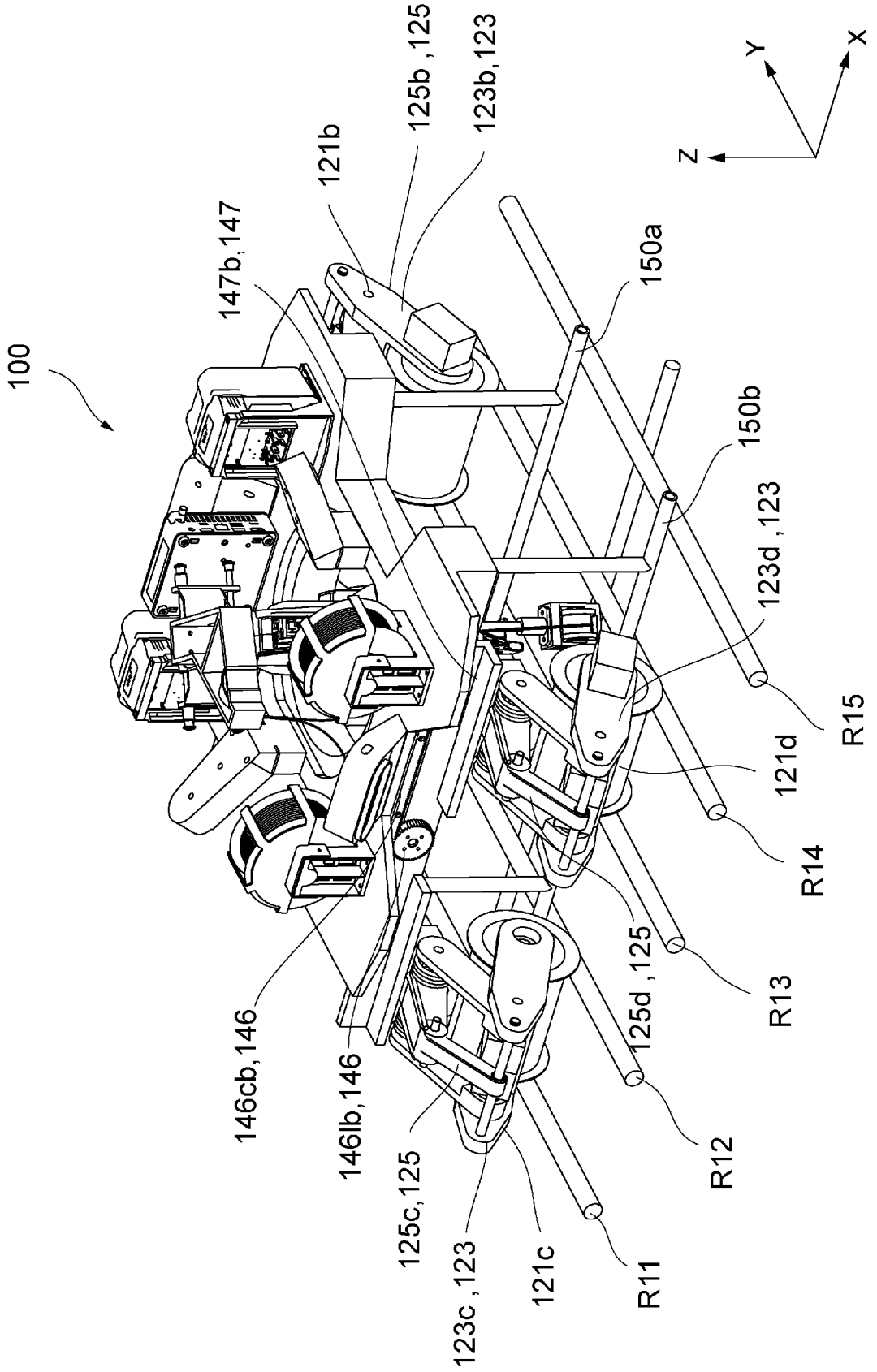
100
147b,147
121b
125b ,125
123b,123
150a
150b
123d ,123
121d
R15
R14
R13
R12
R11
125d ,125
121c
123c ,123
125c,125
146lb,146
146cb,146
Z
Y
X

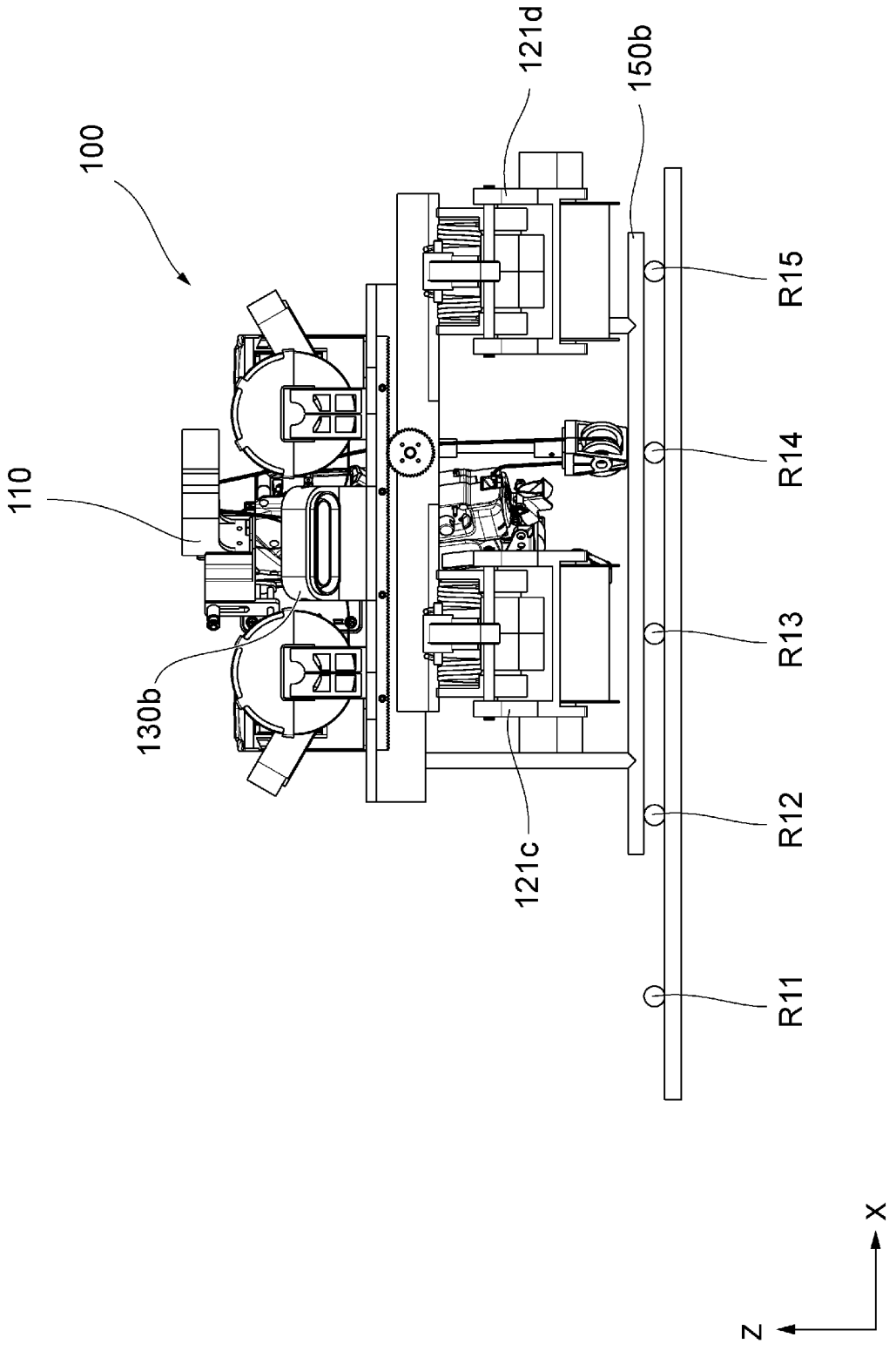

FIG. 25A

FIG. 25B

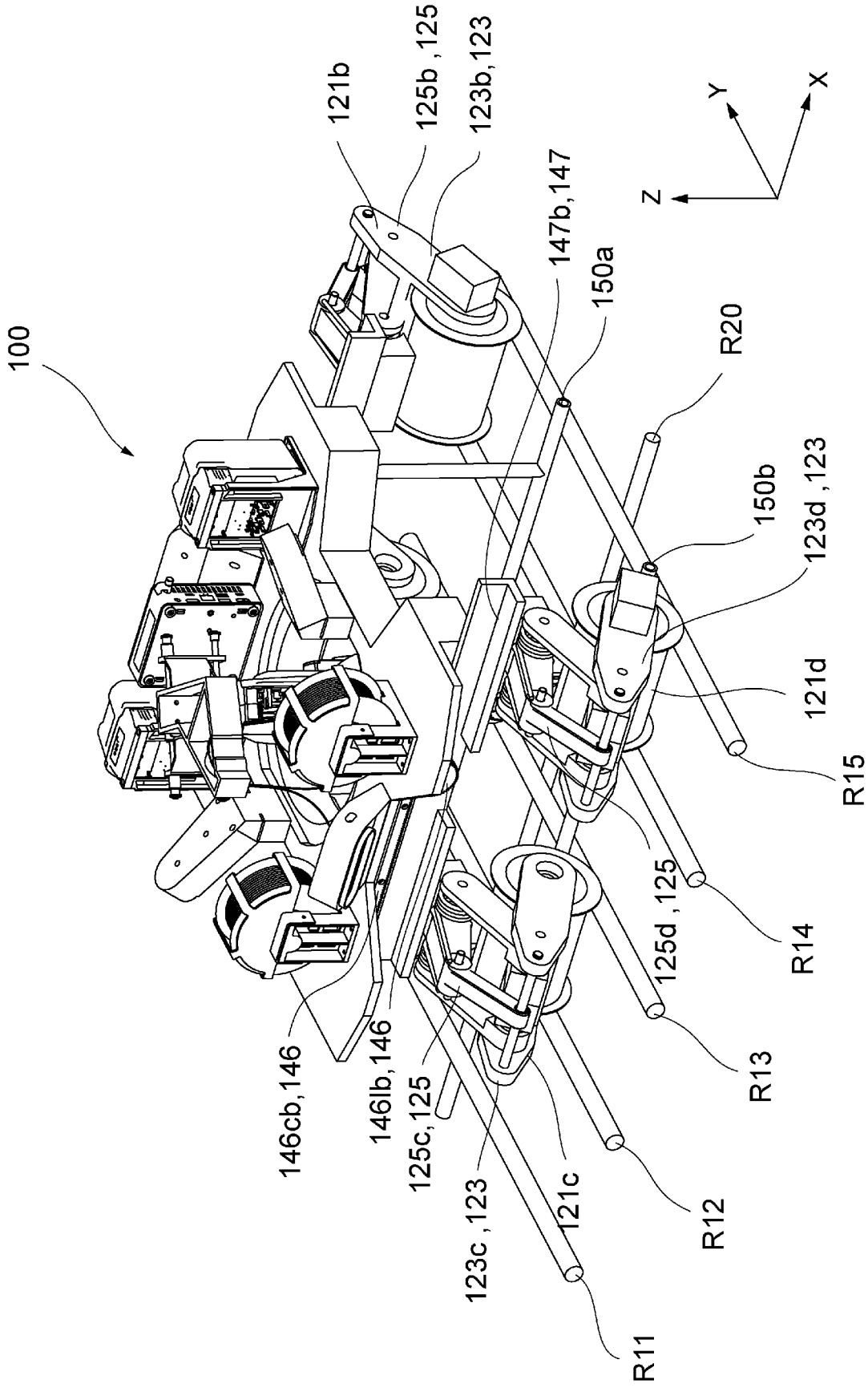
100
121b
125b ,125
123b,123
147b,147
150a
R20
150b
123d ,123
121d
R15
R14
125d ,125
R13
R12
R11
121c
123c ,123
125c,125
146lb,146
146cb,146
Z
Y
X

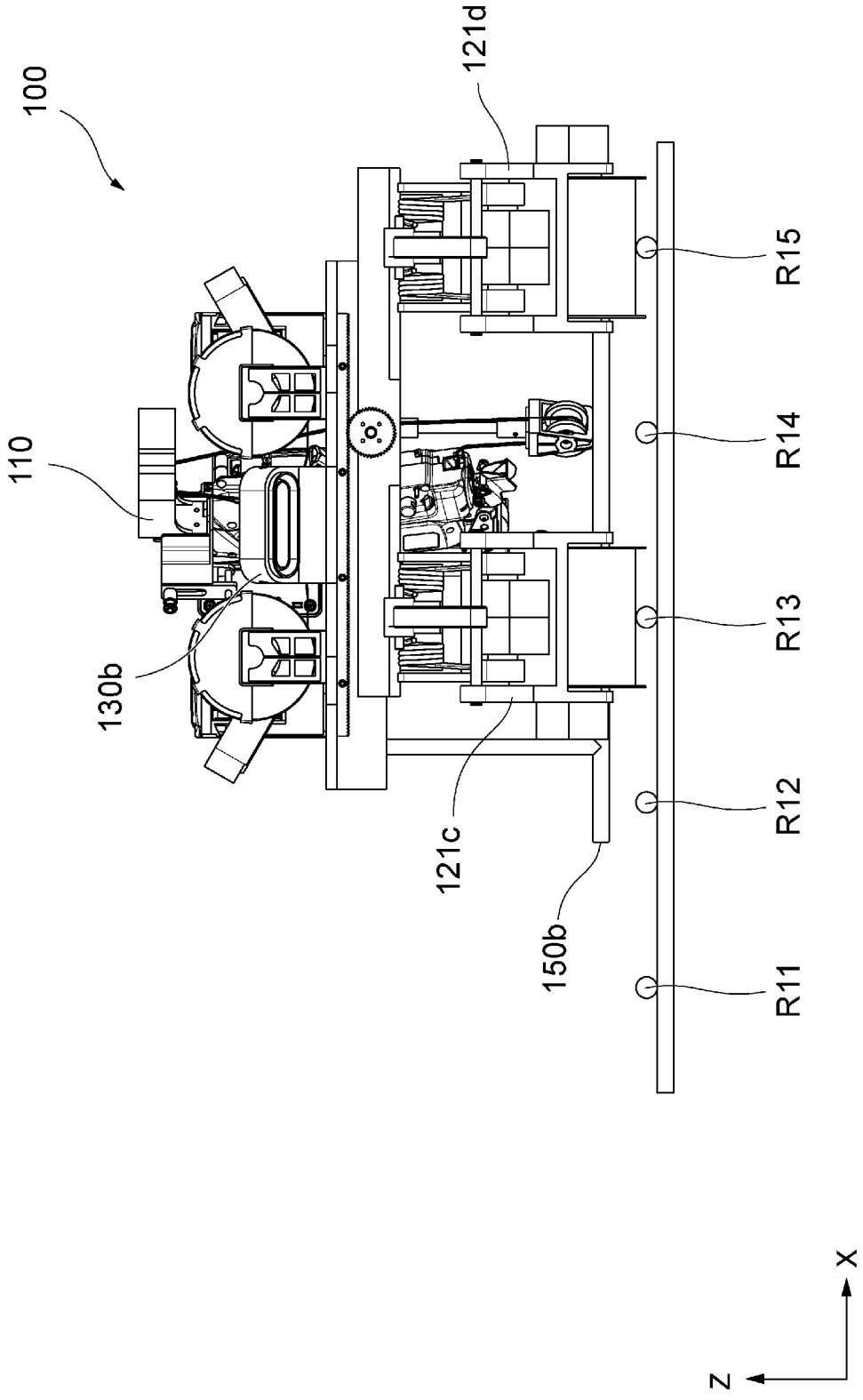

FIG. 26A

FIG. 26B

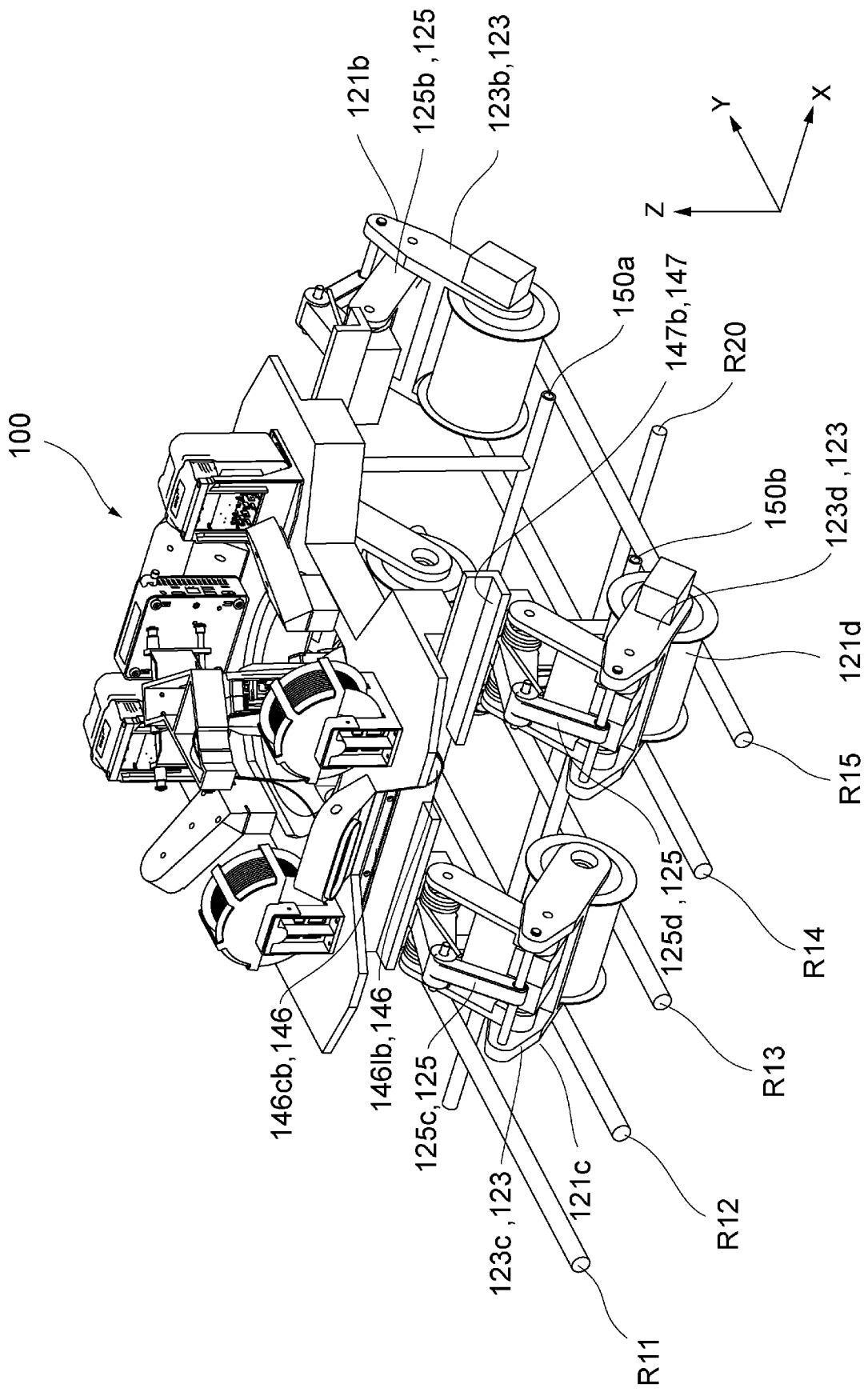
100
121b
125b ,125
123b,123
150a
147b,147
R20
150b
123d ,123
121d
R15
R14
125d ,125
R13
R12
R11
121c
123c ,123
125c,125
146lb,146
146cb,146
Z
Y
X

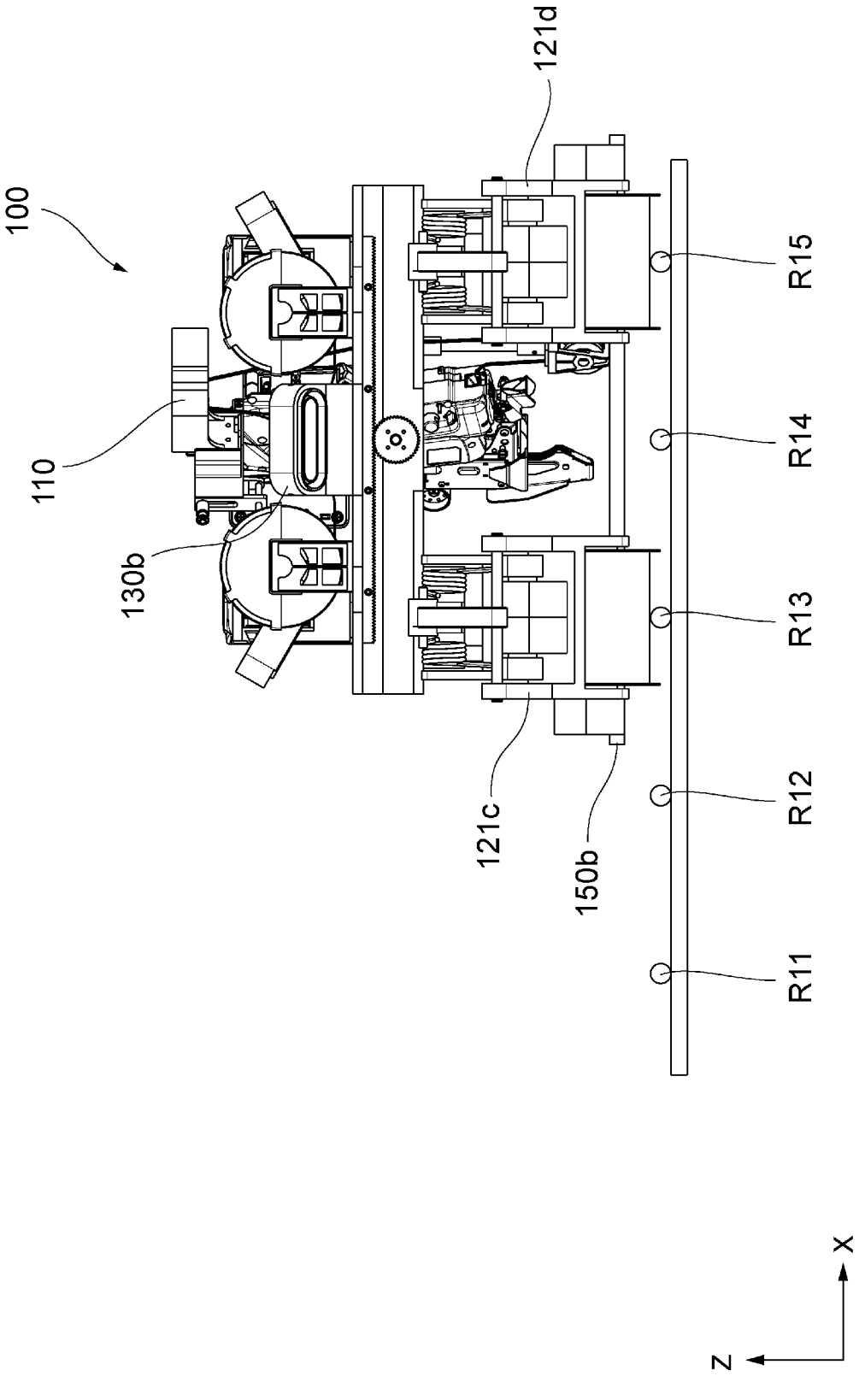

FIG. 27A

FIG. 27B

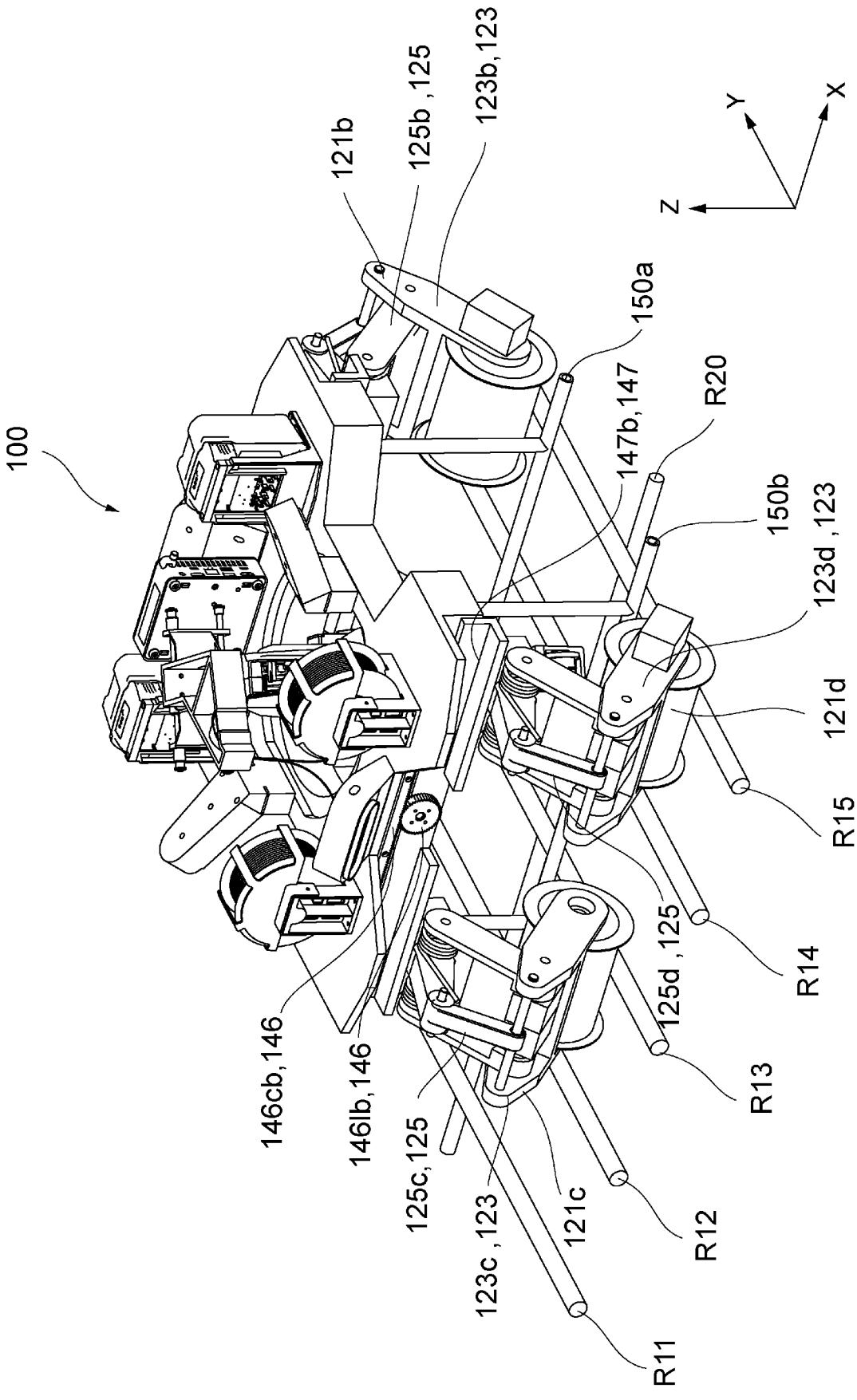
100
121b
125b ,125
123b,123
150a
147b,147
R20
150b
123d ,123
121d
R15
R14
125d ,125
R13
R12
R11
121c
123c ,123
125c,125
146lb,146
146cb,146
Z
Y
X

FIG. 28

