Fig. 1

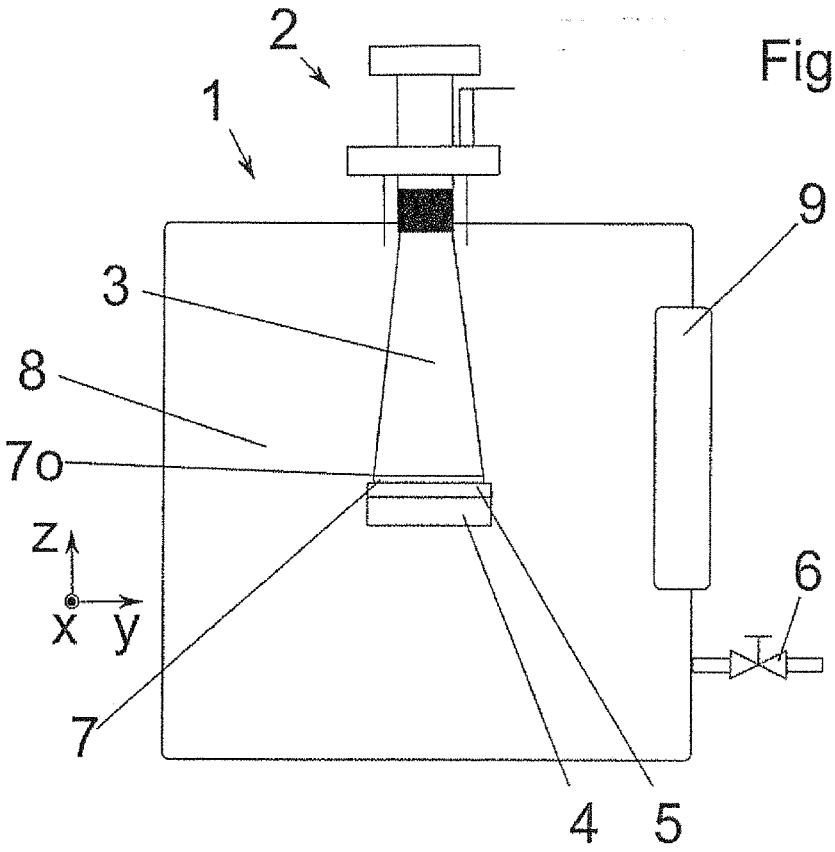

Fig. 2

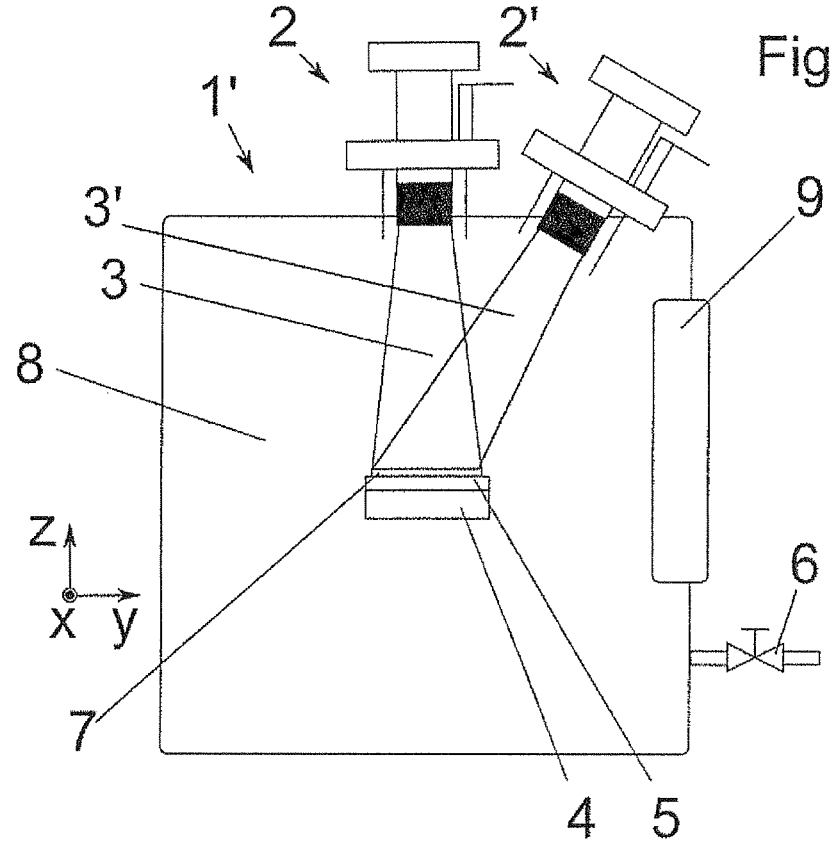

Fig. 3

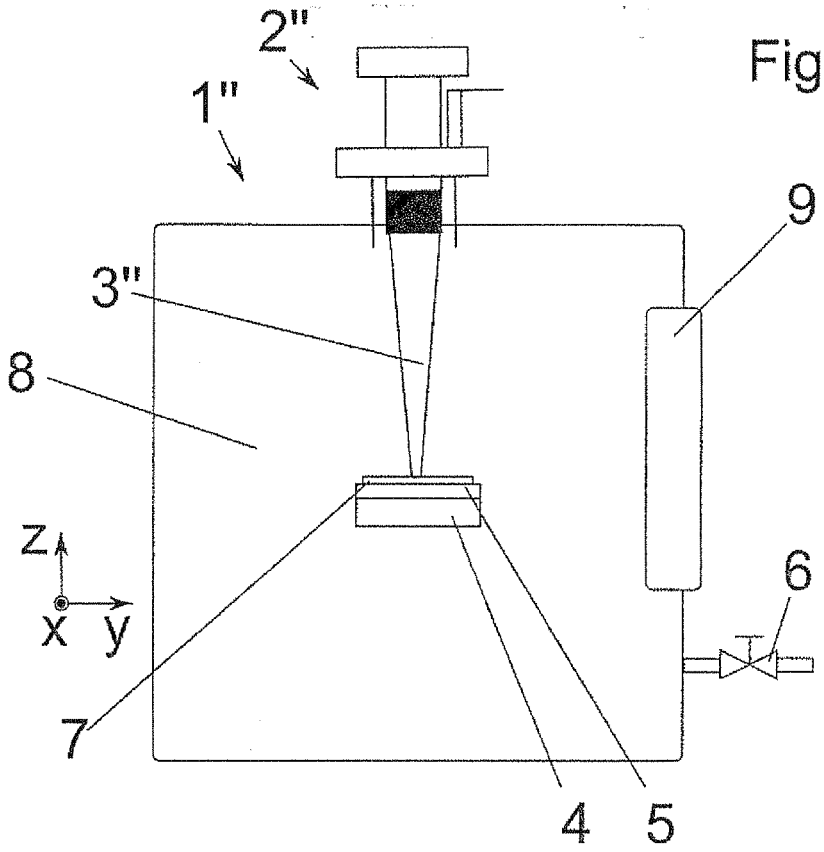

Fig. 4

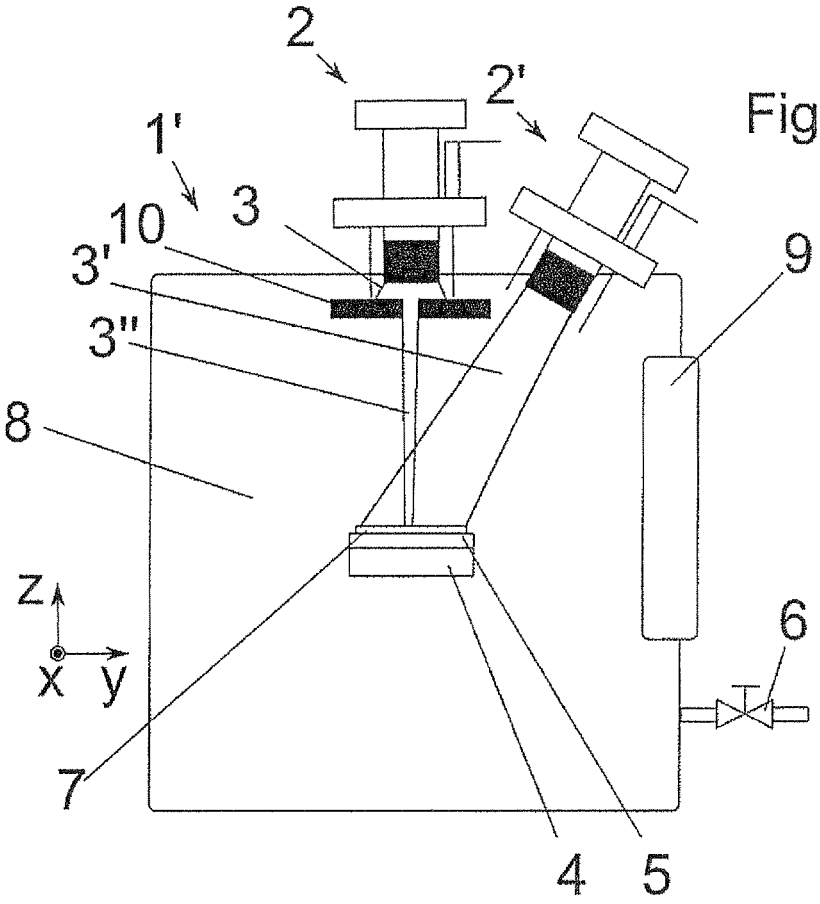

Fig. 5

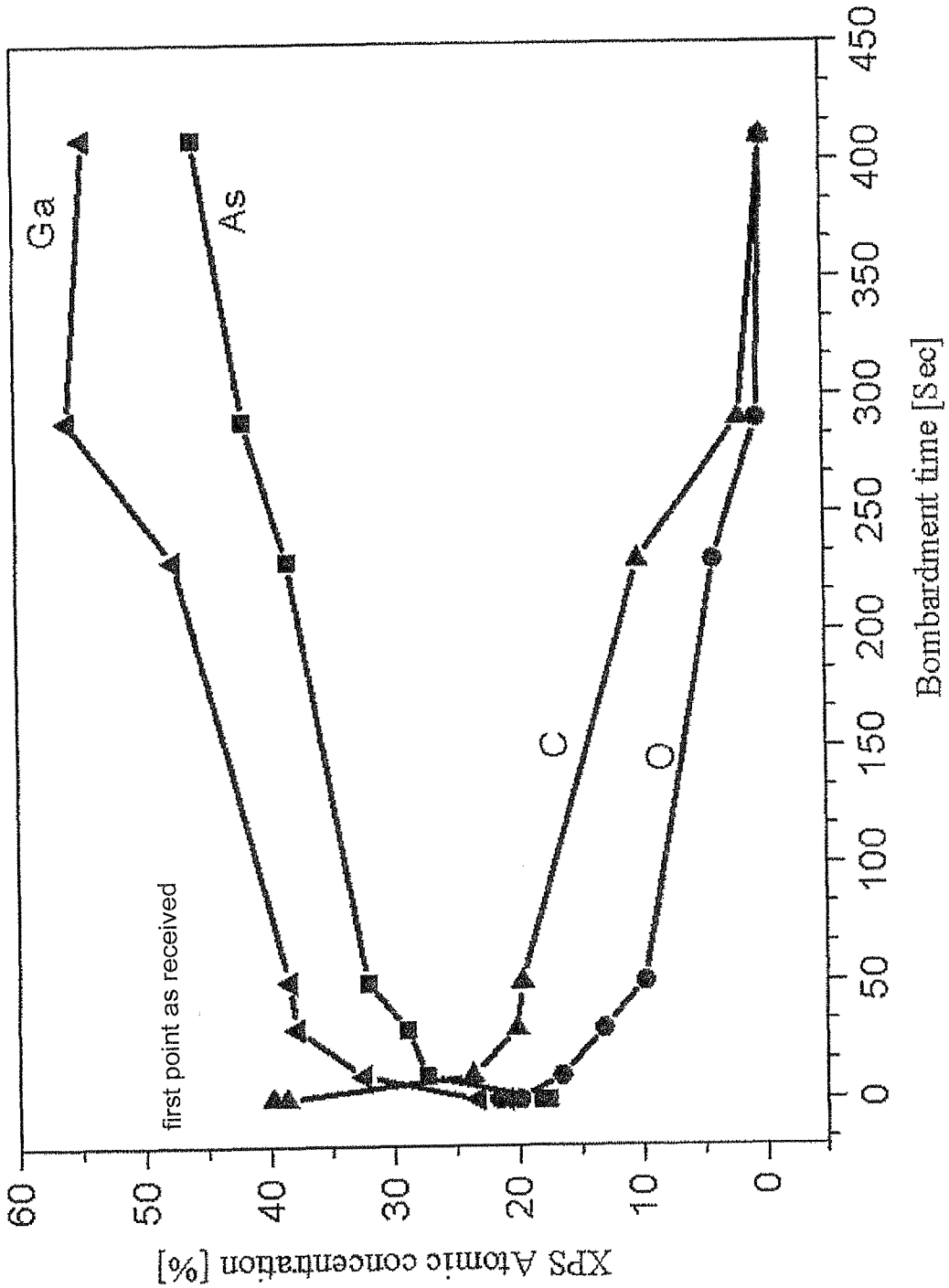
Ga
As
C
O
first point as received
XPS Atomic concentration [%]
Bombardment time [Sec]
0
10
20
30
40
50
60
0
50
100
150
200
250
300
350
400
450

Fig. 6a

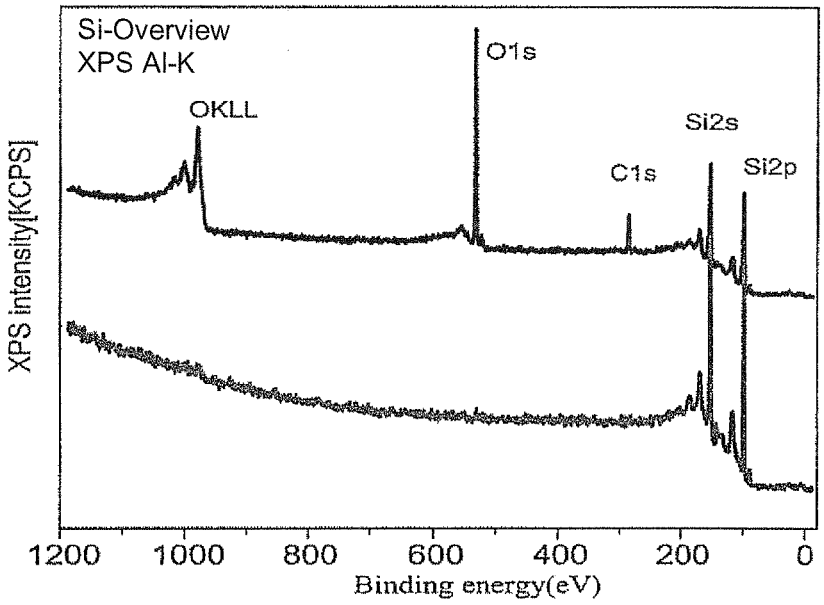

Fig. 6b

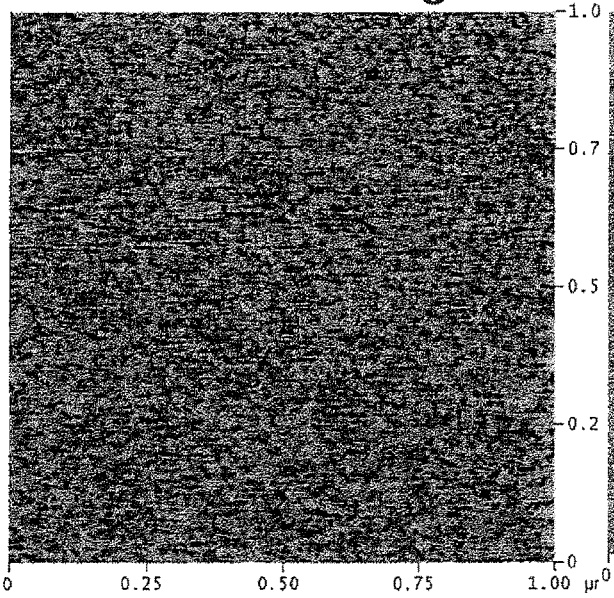

Fig. 6c

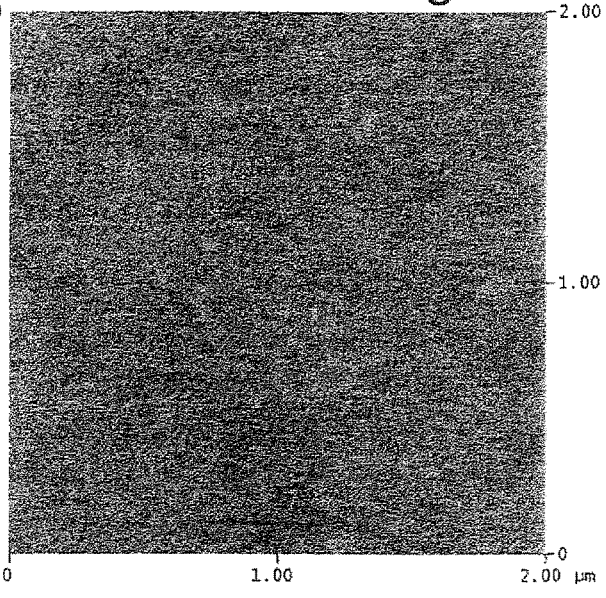

Fig. 7

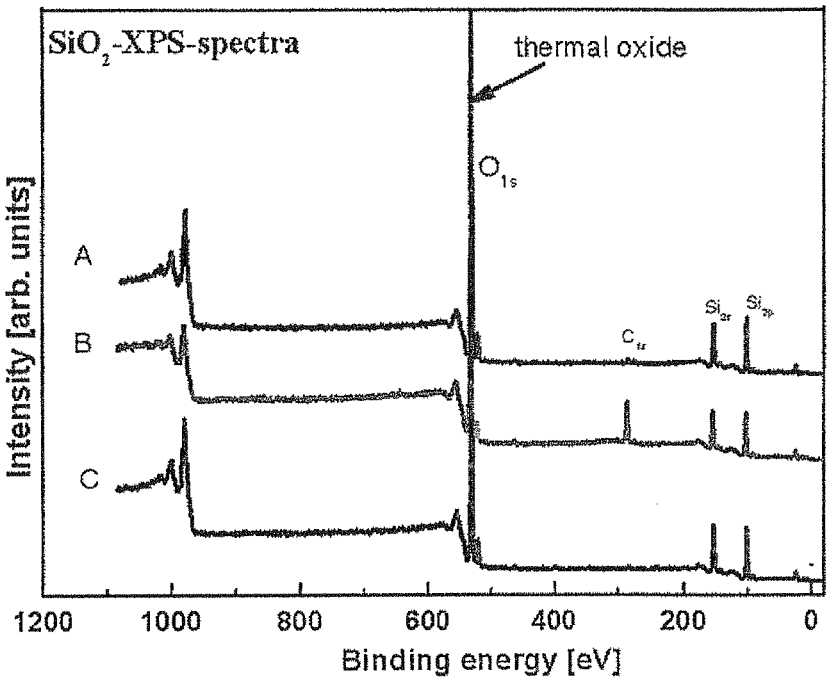
SiO2-XPS-spectra
thermal oxide
O1s
A
B
C
Si2s
Si2p
C1s
Intensity [arb. units]
1200
1000
800
600
400
200
0
Binding energy [eV]

Fig. 8

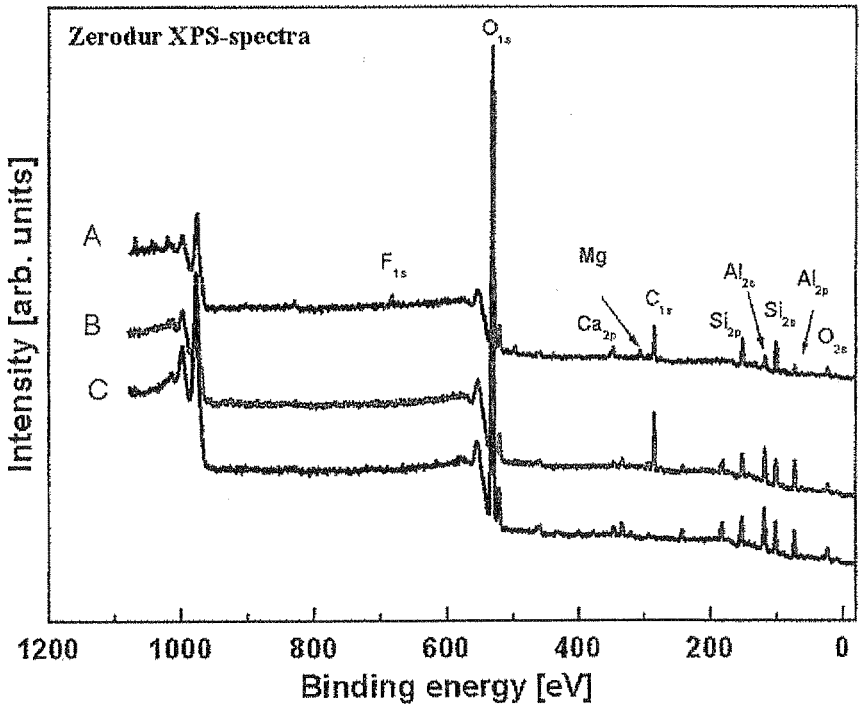
Zerodur XPS-spectra
O1s
A
B
C
F1s
Mg
Ca2p
C1s
Si2p
Al2s
Si2s
Al2p
O2s
Intensity [arb. units]
1200
1000
800
600
400
200
0
Binding energy [eV]

Fig. 9

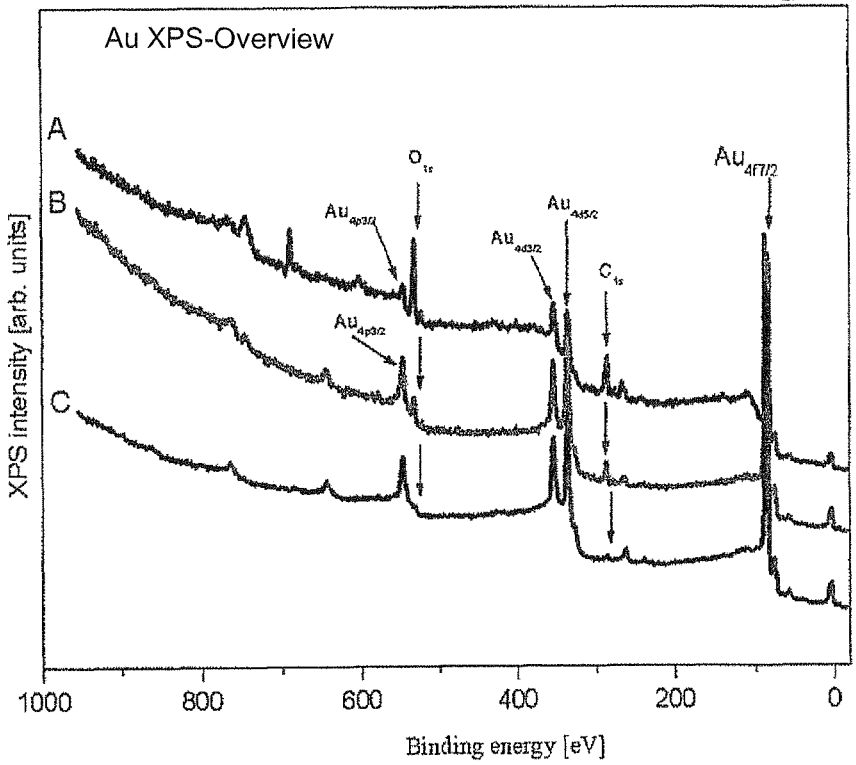
Au XPS-Overview
A
B
C
O1s
Au4p3/2
Au4d3/2
Au4d5/2
C1s
Au4f7/2
XPS intensity [arb. units]
1000
800
600
400
200
0
Binding energy [eV]