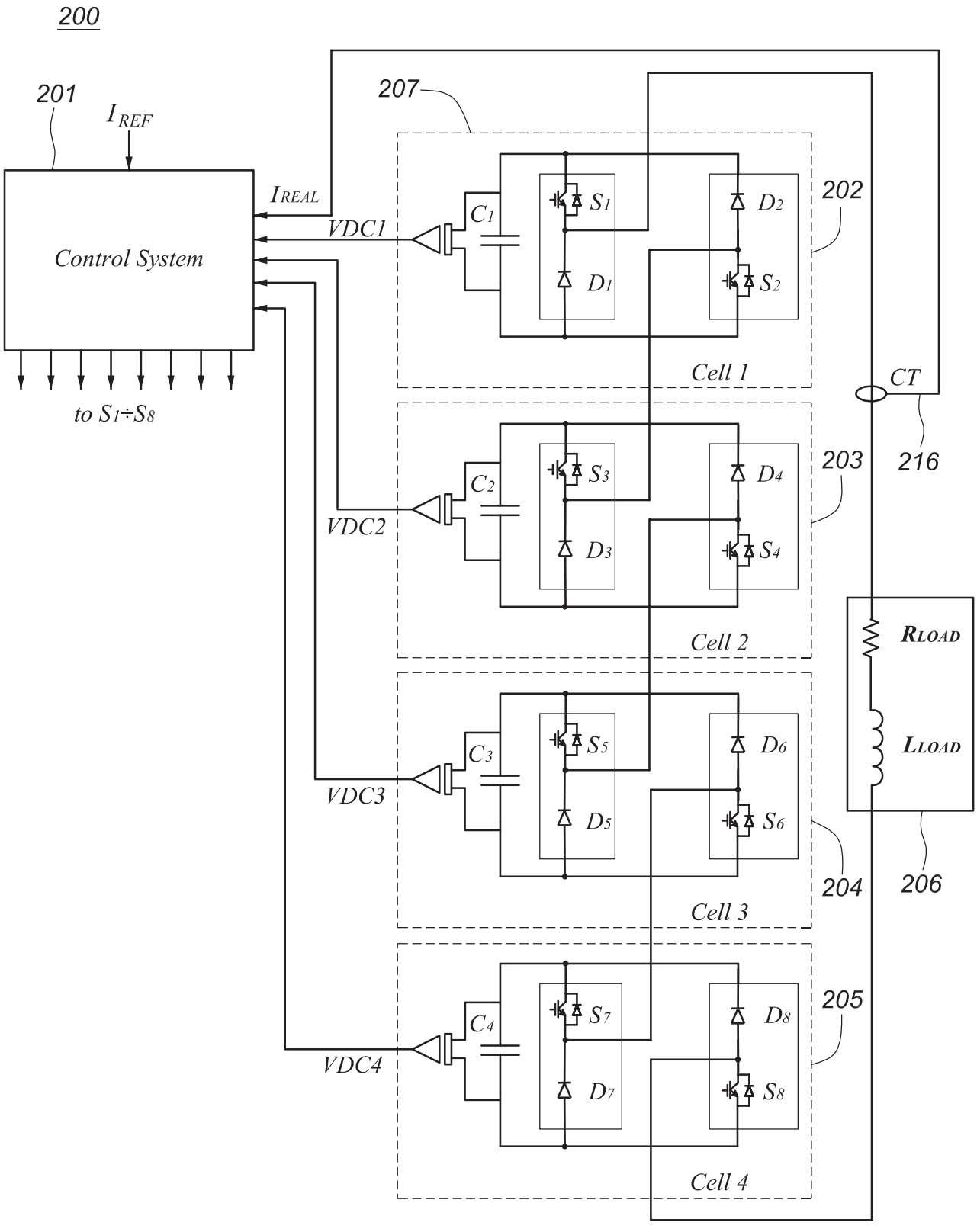
200
201
I_{REF}
Control System
I_{REAL}
VDC1
VDC2
VDC3
VDC4
to $S_1 \div S_8$
207
C_1
S_1
D_2
D_1
S_2
202
Cell 1
CT
216
C_2
S_3
D_4
D_3
S_4
203
Cell 2
R_{LOAD}
L_{LOAD}
C_3
S_5
D_6
D_5
S_6
204
206
Cell 3
C_4
S_7
D_8
D_7
S_8
205
Cell 4

FIG. 2A

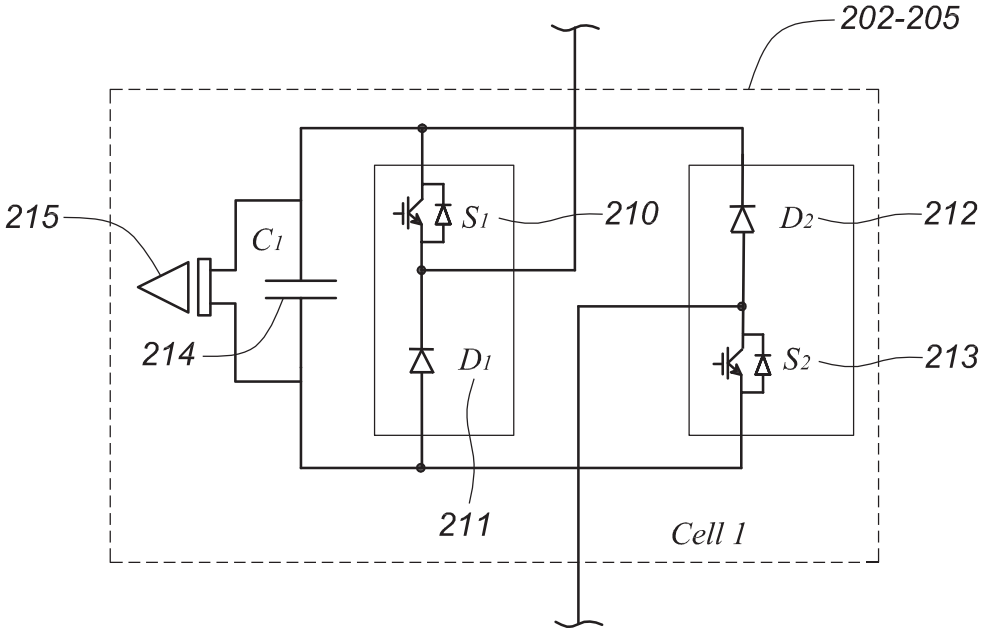

FIG. 2B