DIVERSITY RECEIVER FRONT END SYSTEM WITH POST-AMPLIFIER FILTERS

CROSS-REFERENCE TO RELATED APPLICATION(S)

[0001] This application claims priority to U.S. Provisional Application No. 62/073,043 filed October 31, 2014, entitled DIVERSITY RECEIVER FRONT END SYSTEM, U.S. Provisional Application No. 62/077,894, filed November 10, 2014, entitled DIVERSITY RECEIVER ARCHITECTURE HAVING PRE AND POST LNA FILTERS FOR SUPPORTING CARRIER AGGREGATION, U.S. Application No. 14/727,739, filed June 1, 2015, entitled DIVERSITY FRONT END SYSTEM WITH VARIABLE-GAIN AMPLIFIERS, and U.S. Application No. 14/735,482, filed June 10, 2015, entitled DIVERSITY RECEIVER FRONT END SYSTEM WITH POST-AMPLIFIER FILTERS, the disclosure of each of which is *hereby expressly incorporated by reference herein in its entirety.*

BACKGROUND

Field

[0002] The present disclosure generally relates to wireless communication systems having one or more diversity receiving antennas.

Description of the Related Art

[0003] In wireless communication applications, size, cost, and performance are examples of factors that can be important for a given product. For example, to increase performance, wireless components such as a diversity receive antenna and associated circuitry are becoming more popular.

[0004] In many radio-frequency (RF) applications, a diversity receive antenna is placed physically far from a primary antenna. When both antennas are used at once, a transceiver can process signals from both antennas in order to increase data throughput.

SUMMARY

[0005] In accordance with the present disclosure, there is provided a receiving system comprising:

a first multiplexer having an input for coupling to a diversity antenna, and a second multiplexer having an output for coupling to a separate receiving circuit;

a controller configured to selectively activate one or more of a plurality of paths between the input of the first multiplexer and the output of the second multiplexer;

a plurality of amplifiers, each one of the plurality of amplifiers disposed along a corresponding one of the plurality of paths and configured to amplify a signal received at the amplifier from the diversity antenna;

a plurality of pre-amplifier bandpass filters, each one of the plurality of pre-amplifier bandpass filters disposed along a corresponding path of the plurality of paths at an input of a corresponding amplifier of the plurality of amplifiers, individual pre-amplifier bandpass filters configured to filter a signal received at the pre-amplifier bandpass filter to a respective frequency band resulting in out-of-band noise that is amplified by the corresponding amplifier; and

a plurality of post-amplifier bandpass filters, each one of the plurality of post-amplifier bandpass filters disposed along a corresponding path of the plurality of paths at an output of a corresponding amplifier of the plurality of amplifiers and configured to filter the signal amplified by the corresponding amplifier to a respective frequency band and to reduce the out-of-band noise amplified by the corresponding amplifier, wherein one of the plurality of post-amplifier bandpass filters disposed along a first path and one of the plurality of pre-amplifier bandpass filters disposed along the first path are complementary.

[0005A] In accordance with the present disclosure, there is also provided a radio-frequency (RF) module comprising:

a packaging substrate configured to receive a plurality of components; and

a receiving system implemented on the packaging substrate, the receiving system including a first multiplexer having an input for coupling to a diversity antenna, and a second multiplexer having an output for coupling to a separate receiving circuit; a controller configured to selectively

activate one or more of a plurality of paths between the input of the first multiplexer and the output of a second multiplexer; a plurality of amplifiers, each one of the plurality of amplifiers disposed along a corresponding one of the plurality of paths and configured to amplify a signal received at the amplifier from the diversity antenna; and a first plurality of bandpass filters, each one of the first plurality of bandpass filters disposed along a corresponding one of the plurality of paths at an output of a corresponding one of the plurality of amplifiers and configured to filter the signal amplified by the corresponding amplifier to a respective frequency band, and a second plurality of bandpass filters, each one of the second plurality of bandpass filters disposed along a corresponding one of the plurality of paths at an input of a corresponding one of the plurality of amplifiers and configured to filter a signal received at the bandpass filter to a respective frequency band resulting in out-of-band noise that is amplified by the corresponding amplifier and that is reduced by a corresponding bandpass filter of the first plurality of bandpass filters, wherein one of the bandpass filters disposed along the first path attenuates frequencies below a first frequency band more than frequencies above the first frequency band and another of the bandpass filters disposed along the first path attenuates frequencies above the first frequency band more than frequencies below the first frequency band.

[0005B] In accordance with the present disclosure, there is further provided a wireless device comprising:

a diversity antenna configured to receive a signal;

a diversity receiver module in communication with the diversity antenna, and including a receiving system, the receiving system including a first multiplexer having an input coupled to the diversity antenna, and a second multiplexer having an output; a controller configured to selectively activate one or more of a plurality of paths between the input of the first multiplexer and the output of the second multiplexer; a plurality of amplifiers, each one of the plurality of amplifiers disposed along a corresponding one of the plurality of paths and configured to amplify the signal; and a first plurality of bandpass filters, each one of the first plurality of bandpass filters disposed along a corresponding one of the plurality of

paths at an output of a corresponding one of the plurality of amplifiers and configured to filter the signal amplified by the corresponding amplifier to a respective frequency band, and a second plurality of bandpass filters, each one of the second plurality of bandpass filters disposed along a corresponding one of the plurality of paths at an input of a corresponding one of the plurality of amplifiers and configured to filter a signal received at the bandpass filter to a respective frequency band resulting in out-of-band noise that is amplified by the corresponding amplifier and that is reduced by a corresponding bandpass filter of the first plurality of bandpass filters, wherein one of the bandpass filters disposed along the first path attenuates frequencies below a first frequency band more than frequencies above the first frequency band and another of the bandpass filters disposed along the first path attenuates frequencies above the first frequency band more than frequencies below the first frequency band;

a separate receiver circuit external to the diversity receiver module and coupled to the output of the second multiplexer through a transmission line; and

a transceiver coupled to the separate receiver circuit, and configured to further process a signal processed by the diversity receiver module and the separate receiver circuit.

[0005C] In some implementations, the present disclosure relates to a receiving system including a controller configured to selectively activate one or more of a plurality of paths between an input of a first

multiplexer and an output of a second multiplexer. The receiving system can include a plurality of amplifiers. Each one of the plurality of amplifiers can be disposed along a corresponding one of the plurality of paths and can be configured to amplify a signal received at the amplifier. The receiving system can include a first plurality of bandpass filters. Each one of the first plurality of bandpass filters can be disposed along a corresponding one of the plurality of paths at an output of a corresponding one of the plurality of amplifiers and can be configured to filter a signal received at the bandpass filter to a respective frequency band.

[0006] In some embodiments, the receiving system can further include a second plurality of bandpass filters. Each one of the second plurality of bandpass filters can be disposed along a corresponding one of the plurality of paths at an input of a corresponding one of the plurality of amplifiers and can be configured to filter a signal received at the bandpass filter to a respective frequency band.

[0007] In some embodiments, one of the first plurality of bandpass filters disposed along a first path and one of the second plurality of bandpass filters disposed along the first path can be complementary. In some embodiments, one of the bandpass filters disposed along the first path can attenuate frequencies below the respective frequency band more than frequencies above the respective frequency band and another of the bandpass filters disposed along the first path can attenuate frequencies above the respective frequency band more than frequencies below the respective frequency band.

[0008] In some embodiments, the receiving system can further include a transmission line coupled to the output of the second multiplexer and coupled to a downstream module including a downstream multiplexer. In some embodiments, the downstream module does not include a downstream bandpass filter. In some embodiments, the downstream multiplexer includes a sample switch. In some embodiments, the downstream module can include one or more downstream amplifiers. In some embodiments, a number of the one or more downstream amplifiers can be less than a number of the plurality of amplifiers.

[0009] In some embodiments, at least one of the plurality of amplifiers can include a low-noise amplifier.

[0010] In some embodiments, the receiving system can further include one or more tunable matching circuits disposed at one or more of the input of the first multiplexer and the output of the second multiplexer.

[0011] In some embodiments, the controller can be configured to selectively activate the one or more of the plurality of paths based on a band select signal received by the controller. In some embodiments, the controller can be configured to selectively activate the one or more of the plurality of paths by transmitting a splitter control signal to the first multiplexer and a combiner control signal to the second multiplexer.

[0012] In some implementations, the present disclosure relates to a radio-frequency (RF) module that includes a packaging substrate configured to receive a plurality of components. The RF module further includes a receiving system implemented on the packaging substrate. The receiving system includes a controller configured to selectively activate one or more of a plurality of paths between an input of a first multiplexer and an output of a second multiplexer. The receiving system further includes a plurality of amplifiers. Each one of the plurality of amplifiers can be disposed along a corresponding one of the plurality of paths and can be configured to amplify a signal received at the amplifier. The receiving system further includes a first plurality of bandpass filters. Each one of the first plurality of bandpass filters can be disposed along a corresponding one of the plurality of paths at an output of a corresponding one of the plurality of amplifiers and can be configured to filter a signal received at the bandpass filter to a respective frequency band.

[0013] In some embodiments, the RF module can be a diversity receiver front-end module (FEM).

[0014] In some embodiments, the receiving system can further include a second plurality of bandpass filters. Each one of the second plurality of bandpass filters can be disposed along a corresponding one of the plurality of paths at an input of a corresponding one of the plurality of amplifiers and can be configured to filter a signal received at the bandpass filter to a respective frequency band.

[0015] In some embodiments, the plurality of paths can include an off-module path including an off-module bandpass filter and one of the plurality of amplifiers.

[0016] According to some teachings, the present disclosure relates to a wireless device that includes a first antenna configured to receive a first radio-frequency (RF) signal. The wireless device further includes a first front-end module (FEM) in communication with the first antenna. The first FEM including a packaging substrate configured to receive a plurality of components. The first FEM further includes a receiving system implemented on the packaging substrate. The receiving system includes a controller configured to selectively activate one or more of a plurality of paths between an input of a first multiplexer and an output of a second multiplexer. The receiving system further includes a plurality of amplifiers. Each one of the plurality of amplifiers can be disposed along a corresponding one of the plurality of paths and can be configured to amplify a signal received at the amplifier. The receiving system further includes a first plurality of bandpass filters. Each one of the first plurality of bandpass filters can be disposed along a corresponding one of the plurality of paths at an output of a corresponding one of the plurality of amplifiers and can be configured to filter a signal received at the bandpass filter to a respective frequency band. The wireless device further includes a communications module configured to receive a processed version of the first RF signal from the output via a transmission line and generate data bits based on the processed version of the first RF signal.

[0017] In some embodiments, the wireless device further includes a second antenna configured to receive a second radio-frequency (RF) signal and a second FEM in communication with the second antenna. The communications module can be configured to receive a processed version of the second RF signal from an output of the second FEM and generate the data bits based on the processed version of the second RF signal.

[0018] In some embodiments, the receiving system further includes a second plurality of bandpass filters. Each one of the second plurality of bandpass filters can be disposed along a corresponding one of the plurality of paths at an input of a corresponding one of the plurality of amplifiers and can be configured to filter a signal received at the bandpass filter to a respective frequency band.

BRIEF DESCRIPTION OF THE DRAWINGS

[0019] Figure 1 shows a wireless device having a communications module coupled to a primary antenna and a diversity antenna.

[0020] Figure 2 shows a diversity receiver (DRx) configuration including a DRx front-end module (FEM).

[0021] Figure 3 shows that in some embodiments, a diversity receiver (DRx) configuration may include a DRx module with multiple paths corresponding to multiple frequency bands.

[0022] Figure 4A shows that in some embodiments, a diversity receiver configuration may include a diversity receiver (DRx) module having a plurality of bandpass filters disposed at the outputs of a plurality of amplifiers.

[0023] Figure 4B shows that in some embodiments, a diversity receiver configuration may include a diversity RF module with fewer amplifiers than a diversity receiver (DRx) module.

[0024] Figure 5 shows that in some embodiments, a diversity receiver configuration may include a DRx module coupled to an off-module filter.

[0025] Figure 6 shows that in some embodiments, a diversity receiver configuration may include a DRx module with tunable matching circuits.

[0026] Figure 7 depicts a module having one or more features as described herein.

[0027] Figure 8 depicts a wireless device having one or more features described herein.

DETAILED DESCRIPTION OF SOME EMBODIMENTS

[0028] The headings provided herein, if any, are for convenience only and do not necessarily affect the scope or meaning of the claimed invention.

[0029] Figure 1 shows a wireless device 100 having a communications module 110 coupled to a primary antenna 130 and a diversity antenna 140. The communications module 110 (and its constituent components) may be controlled by a controller 120. The communications module 110 includes a transceiver 112 that is configured to convert between analog radio-frequency (RF) signals and digital data signals. To that end, the transceiver 112 may include a digital-to-analog converter, an analog-to-digital converter, a local oscillator for modulating or demodulating a baseband analog signal to or from a carrier frequency, a baseband processor that converts between digital samples and data bits (e.g., voice or other types of data), or other components.

[0030] The communications module 110 further includes an RF module 114 coupled between the primary antenna 130 and the transceiver 112. Because the RF module 114 may be physically close to the primary antenna 130 to reduce attenuation due to cable loss, the RF module 114 may be referred to as front-end module (FEM). The RF module 114 may perform processing on an analog signal received from the primary antenna 130 for the transceiver 112 or received from transceiver 112 for transmission via the primary antenna 130. To that end, the RF module 114 may include filters, power amplifiers, band select switches, matching circuits, and other components. Similarly, the communications module 110 includes a diversity RF module 116 coupled between the diversity antenna 140 and the transceiver 112 that performs similar processing.

[0031] When a signal is transmitted to the wireless device, the signal may be received at both the primary antenna 130 and the diversity antenna 140. The primary antenna 130 and diversity antenna 140 may be physically spaced apart such that the signal at the primary antenna 130 and diversity antenna 140 is received with different characteristics. For example, in one embodiment, the primary antenna 130 and diversity antenna 140 may receive the signal with different attenuation, noise, frequency response, or phase shift. The transceiver 112 may use both of the signals with different characteristics to determine data bits corresponding to the signal. In some implementations, the transceiver 112 selects from between the primary antenna 130 and the diversity antenna 140 based on the characteristics, such as selecting the antenna with the highest signal-to-noise ratio. In some implementations, the transceiver 112 combines the signals from the primary antenna 130 and the diversity antenna 140 to increase the signal-to-noise ratio of the combined signal. In some implementations, the transceiver 112 processes the signals to perform multiple-input/multiple-output (MIMO) communication.

[0032] Because the diversity antenna 140 is physically spaced apart from the primary antenna 130, the diversity antenna 140 is coupled to the communications module 110 by a transmission line 135, such as a cable or a printed circuit board (PCB) trace. In some implementations, the transmission line 135 is lossy and attenuates the signal received at the diversity antenna 140 before it reaches the communications module 110. Thus, in some implementations, as described below, gain is applied to the signal received at the

diversity antenna 140. The gain (and other analog processing, such as filtering) may be applied by a diversity receiver module. Because such a diversity receiver module may be located physically close to the diversity antenna 140, it may be referred to a diversity receiver front-end module. In contrast, the diversity RF module 116, coupled to the diversity antenna 140 via the transmission line 135, may be referred to as a back-end module or a downstream module.

[0033] Figure 2 shows a diversity receiver (DRx) configuration 200 including a DRx front-end module (FEM) 210. The DRx configuration 200 includes a diversity antenna 140 that is configured to receive a diversity signal and provide the diversity signal to the DRx FEM 210. The DRx FEM 210 is configured to perform processing on the diversity signal received from the diversity antenna 140. For example, the DRx FEM 210 may be configured to filter the diversity signal to one or more active frequency bands, e.g., as indicated by the controller 120. As another example, the DRx FEM 210 may be configured to amplify the diversity signal. To that end, the DRx FEM 210 may include filters, low-noise amplifiers, band select switches, matching circuits, and other components.

[0034] The DRx FEM 210 transmits the processed diversity signal via a transmission line 135 to the diversity RF (D-RF) module 116, which feeds a further processed diversity signal to the transceiver 112. The diversity RF module 116 (and, in some implementations, the transceiver 112), is controlled by the controller 120. In some implementations the controller 120 may be implemented within the transceiver 112.

[0035] Figure 3 shows that in some embodiments, a diversity receiver (DRx) configuration 300 may include a DRx module 310 with multiple paths corresponding to multiple frequency bands. The DRx configuration 300 includes a diversity antenna 140 configured to receive a diversity signal. In some implementations, the diversity signal may be a single-band signal including data modulated onto a single frequency band. In some implementations, the diversity signal may be a multi-band signal (also referred to as an inter-band carrier aggregation signal) including data modulated onto multiple frequency bands.

[0036] The DRx module 310 has an input that receives the diversity signal from the diversity antenna 140 and an output that provides a processed diversity signal to the transceiver 330 (via the transmission line 135 and the

diversity RF module 320). The DRx module 310 input feeds into an input of first multiplexer (MUX) 311. The first multiplexer 311 includes a plurality of multiplexer outputs, each corresponding to a path between the input and the output of the DRx module 310. Each of the paths may correspond to a respective frequency band. The DRx module 310 output is provided by the output of second multiplexer 312. The second multiplexer 312 includes a plurality of multiplexer inputs, each corresponding to one of the paths between the input and the output of the DRx module 310.

[0037] The frequency bands may be cellular frequency bands, such as UMTS (Universal Mobile Telecommunications System) frequency bands. For example, a first frequency band may be UMTS (Universal Mobile Telecommunications System) downlink or “Rx” Band 2, between 1930 megahertz (MHZ) and 1990 MHz, and a second frequency band may be UMTS downlink or “Rx” Band 5, between 869 MHz and 894 MHz. Other downlink frequency bands may be used, such as those described below in Table 1 or other non-UMTS frequency bands.

[0038] In some implementations, the DRx module 310 includes a DRx controller 302 that receives signals from the controller 120 (also referred to as a communications controller) and, based on the received signals, selectively activates one or more of the plurality of paths between the input and the output. In some implementations, the DRx module 310 does not include a DRx controller 302 and the controller 120 selectively activates the one or more of the plurality of paths directly.

[0039] As noted above, in some implementations, the diversity signal is a single-band signal. Thus, in some implementations, the first multiplexer 311 is a single-pole / multiple-throw (SPMT) switch that routes the diversity signal to one of the plurality of paths corresponding to the frequency band of the single-band signal based on a signal received from the DRx controller 302. The DRx controller 302 may generate the signal based on a band select signal received by the DRx controller 302 from the communications controller 120. Similarly, in some implementations, the second multiplexer 312 is a SPMT switch that routes the signal from the one of the plurality of paths corresponding to the frequency band of the single-band signal based on a signal received from the DRx controller 302.

[0040] As noted above, in some implementations, the diversity signal is a multi-band signal. Thus, in some implementations, the first multiplexer 311 is a band splitter that routes the diversity signal to two or more of the plurality of paths corresponding to the two or more frequency bands of the multi-band signal based on a splitter control signal received from the DRx controller 302. The function of the band splitter may be implemented as a SPMT switch, a diplexer filter, or some combination of these. A diplexer may be replaced with a triplexer, a quadplexer, or any other multiplexer configured to split an input signal received at the input of the DRx module 310 into a plurality of signals at a respective plurality of frequency bands propagated along a plurality of paths.

[0041] Similarly, in some implementations, the second multiplexer 312 is a band combiner that combines the signals from the two or more of the plurality of paths corresponding to the two or more frequency bands of the multi-band signal based on a combiner control signal received from the DRx controller 302. The function of the band combiner may be implemented as a SPMT switch, a diplexer filter, or some combination of these. The DRx controller 302 may generate the splitter control signal and the combiner control signal based on a band select signal received by the DRx controller 302 from the communications controller 120.

[0042] Thus, in some implementations, the DRx controller 302 is configured to selectively activate one or more of the plurality of paths based on a band select signal received by the DRx controller 302 (e.g., from the communications controller 120). In some implementations, the DRx controller 302 is configured to selectively activate one or more of the plurality of paths by transmitting a splitter control signal to a band splitter and a combiner control signal to a band combiner.

[0043] The DRx module 310 includes a plurality of bandpass filters 313a-313d. Each one of the bandpass filters 313a-313d is disposed along a corresponding one of the plurality of paths and configured to filter a signal received at the bandpass filter to the respective frequency band of the one of the plurality of paths. In some implementations, the bandpass filters 313a-313d are further configured to filter a signal received at the bandpass filter to a downlink frequency sub-band of the respective frequency band of the one of the plurality of paths. The DRx module 310 includes a plurality of amplifiers 314a-314d. Each

one of the amplifiers 314a-314d is disposed along a corresponding one of the plurality of paths and configured to amplify a signal received at the amplifier.

[0044] In some implementations, the amplifiers 314a-314d are narrowband amplifiers configured to amplify a signal within the respective frequency band of the path in which the amplifier is disposed. In some implementations, the amplifiers 314a-314d are controllable by the DRx controller 302. For example, in some implementations, each of the amplifiers 314a-314d includes an enable/disable input and is enabled (or disabled) based on an amplifier enable signal received at the enable/disable input. The amplifier enable signal may be transmitted by the DRx controller 302. Thus, in some implementations, the DRx controller 302 is configured to selectively activate one or more of the plurality of paths by transmitting an amplifier enable signal to one or more of the amplifiers 314a-314d respectively disposed along the one or more of the plurality of paths. In such implementations, rather than being controlled by the DRx controller 302, the first multiplexer 311 may be a band splitter that routes the diversity signal to each of the plurality of paths and the second multiplexer 312 may be a band combiner that combines the signals from each of the plurality of paths. However, in implementations in which the DRx controller 302 controls the first multiplexer 311 and second multiplexer 312, the DRX controller 302 may also enable (or disable) particular amplifiers 314a-314d, e.g., to save battery.

[0045] In some implementations, the amplifiers 314a-314d are variable-gain amplifiers (VGAs). Thus, the some implementations, the DRx module 310 includes a plurality of variable-gain amplifiers (VGAs), each one of the VGAs disposed along a corresponding one of the plurality of paths and configured to amplify a signal received at the VGA with a gain controlled by an amplifier control signal received from the DRx controller 302.

[0046] The gain of a VGA may be bypassable, step-variable, continuously-variable. In some implementations, at least one of the VGAs includes a fixed-gain amplifier and a bypass switch controllable by the amplifier control signal. The bypass switch may (in a first position) close a line between an input of the fixed-gain amplifier to an output of fixed-gain amplifier, allowing a signal to bypass the fixed-gain amplifier. The bypass switch may (in a second position) open the line between the input and the output, passing a signal through the fixed-gain amplifier. In some implementations, when the bypass switch is in

the first position, the fixed-gain amplifier is disabled or otherwise reconfigured to accommodate the bypass mode.

[0047] In some implementations, at least one of the VGAs includes a step-variable gain amplifier configured to amplify the signal received at the VGA with a gain of one of plurality of configured amounts indicated by the amplifier control signal. In some implementations, at least one of the VGAs includes a continuously-variable gain amplifier configured to amplify a signal received at the VGA with a gain proportional to the amplifier control signal.

[0048] In some implementations, the amplifiers 314a-314d are variable-current amplifiers (VCAs). The current drawn by a VCA may be bypassable, step-variable, continuously-variable. In some implementations, at least one of the VCAs includes a fixed-current amplifier and a bypass switch controllable by the amplifier control signal. The bypass switch may (in a first position) close a line between an input of the fixed-current amplifier to an output of fixed-current amplifier, allowing a signal to bypass the fixed-current amplifier. The bypass switch may (in a second position) open the line between the input and the output, passing a signal through the fixed-current amplifier. In some implementations, when the bypass switch is in the first position, the fixed-current amplifier is disabled or otherwise reconfigured to accommodate the bypass mode.

[0049] In some implementations, at least one of the VCAs includes a step-variable current amplifier configured to amplify the signal received at the VCA by drawing a current of one of plurality of configured amounts indicated by the amplifier control signal. In some implementations, at least one of the VCAs includes a continuously-variable current amplifier configured to amplify a signal received at the VCA by drawing a current proportional to the amplifier control signal.

[0050] In some implementations, the amplifiers 314a-314d are fixed-gain, fixed-current amplifiers. In some implementations, the amplifiers 314a-314d are fixed-gain, variable-current amplifiers. In some implementations, the amplifiers 314a-314d are variable-gain, fixed-current amplifiers. In some implementations, the amplifiers 314a-314d are variable-gain, variable-current amplifiers.

[0051] In some implementations, the DRx controller 302 generates the amplifier control signal(s) based on a quality of service metric of an input signal

received at the input of the first multiplexer 311. In some implementations, the DRx controller 302 generates the amplifier control signal(s) based on a signal received from the communications controller 120, which may, in turn, be based on a quality of service (QoS) metric of the received signal. The QoS metric of the received signal may be based, at least in part, on the diversity signal received on the diversity antenna 140 (e.g., an input signal received at the input). The QoS metric of the received signal may be further based on a signal received on a primary antenna. In some implementations, the DRx controller 302 generates the amplifier control signal(s) based on a QoS metric of the diversity signal without receiving a signal from the communications controller 120.

[0052] In some implementations, the QoS metric includes a signal strength. As another example, the QoS metric may include a bit error rate, a data throughput, a transmission delay, or any other QoS metric.

[0053] As noted above, the DRx module 310 has an input that receives the diversity signal from the diversity antenna 140 and an output that provides a processed diversity signal to the transceiver 330 (via the transmission line 135 and the diversity RF module 320). The diversity RF module 320 receives the processed diversity signal via the transmission line 135 and performs further processing. In particular, the processed diversity signal is split or routed by a diversity RF multiplexer 321 (also referred to as a downstream multiplexer) to one or more paths on which the split or routed signal is filtered by corresponding bandpass filters 323a-323d (also referred to as downstream bandpass filters) and amplified by corresponding amplifiers 324a-324d (also referred to as downstream amplifiers). The output of each of the amplifiers 324a-324d is provided to the transceiver 330.

[0054] The diversity RF multiplexer 321 may be controlled by the controller 120 (either directly or via or an on-chip diversity RF controller) to selectively activate one or more of the paths. Similarly, the amplifiers 324a-324d may be controlled by the controller 120. For example, in some implementations, each of the amplifiers 324a-324d includes an enable/disable input and is enabled (or disabled) based on an amplifier enable signal. In some implementations, the amplifiers 324a-324d are variable-gain amplifiers (VGAs) that amplify a signal received at the VGA with a gain controlled by an amplifier control signal received from the controller 120 (or an on-chip diversity RF controller controlled by the

controller 120). In some implementations, the amplifiers 324a-324d are variable-current amplifiers (VCAs).

[0055] With the DRx module 310 added to the receiver chain already including the diversity RF module 320, the number of bandpass filters in the DRx configuration 300 is doubled. Thus, in some implementations as described further below, bandpass filters 323a-323d are not included in the diversity RF module 320. In some implementations, the bandpass filters 323a-323d (as described below, e.g., with respect to Figures 4A and 4B), are relocated to the DRx module 310. In some implementations, the bandpass filters 313a-313d of the DRx module 310 alone are used to reduce the strength of out-of-band blockers. Further, the automatic gain control (AGC) table of the diversity RF module 320 may be shifted to reduce the amount of gain provided by the amplifiers 324a-324d of the diversity RF module 320 by the amount of the gain provided by the amplifiers 314a-314d of the DRx module 310.

[0056] For example, if the DRx module gain is 15 dB and the receiver sensitivity is -100 dBm, the diversity RF module 320 will see -85dBm of sensitivity. If the closed-loop AGC of the diversity RF module 320 is active, its gain will drop by 15 dB automatically. However, both signal components and out-of-band blockers are received amplified by 15 dB. Thus, in some implementations, the 15 dB gain drop of the diversity RF module 320 is accompanied by a 15 dB increase in its linearity. In particular, the amplifiers 324a-324d of the diversity RF module 320 may be designed such that the linearity of the amplifiers increases with reduced gain (or increased current).

[0057] In some implementations, the controller 120 controls the gain (and/or current) of the amplifiers 314a-314d of the DRx module 310 and the amplifiers 324a-324d of the diversity RF module 320. As in the example above, the controller 120 may reduce an amount of gain provided by the amplifiers 324a-324d of the diversity RF module 320 in response to increasing an amount of gain provided by the amplifiers 314a-314d of the DRx module 310. Thus, in some implementations, the controller 120 is configured to generate a downstream amplifier control signal (for the amplifiers 324a-324d of the diversity RF module 320) based on the amplifier control signal (for the amplifiers 314a-314d of the DRx module 310) to control a gain of one or more downstream amplifiers 324a-324d coupled to the output (of the DRx module 310) via the transmission line

135. In some implementations, the controller 120 also controls the gain of other components of the wireless device, such as amplifiers in the primary front-end module (FEM), based on the amplifier control signal.

[0058] As noted above, in some implementations, the bandpass filters 323a-323d are not included. Thus, in some implementations, at least one of the downstream amplifiers 324a-324d are coupled to the output (of the DRx module 310) via the transmission line 135 without passing through a downstream bandpass filter.

[0059] Figure 4A shows that in some embodiments, a diversity receiver configuration 400 may include a diversity receiver (DRx) module 410 having a plurality of bandpass filters 423a-423d disposed at the outputs of a plurality of amplifiers 314a-314d. The diversity receiver configuration 400 includes a DRx module 410 having an input coupled to an antenna 140 and an output coupled to a transmission line 135. The DRx module 410 includes a number of paths between the input and the output of the DRx module 410. Each of the paths include an input multiplexer 311, a pre-amplifier bandpass filter 413a-413d, an amplifier 314a-314d, a post-amplifier bandpass filter 423a-423d, and an output multiplexer 312.

[0060] The DRx controller 302 is configured to selectively activate one or more of the plurality of paths between the input and the output. In some implementations, the DRx controller 302 is configured to selectively activate one or more of the plurality of paths based on a band select signal received by the DRx controller 302 (e.g., from a communications controller). The DRx controller 302 may selectively activate the paths by, for example, enabling or disabling the amplifiers 314a-314d, controlling the multiplexers 311, 312, or through other mechanisms.

[0061] The output of the DRx module 410 is passed, via the transmission line 135, to a diversity RF module 420 which differs from the diversity RF module 320 of Figure 3A in that the diversity RF module 420 of Figure 4A does not include downstream bandpass filters. In some implementations (e.g., as shown in Figure 4A), the downstream multiplexer 321 may be implemented as a sample switch.

[0062] Including post-amplifier bandpass filters 423a-423d within the DRx module 410 rather than the diversity RF module 420 may provide a number

of advantages. For example, as described in detail below, such a configuration may improve the noise figure of the DRx module 410, simplify filter design, and/or improve path isolation.

[0063] Each of the paths of the DRx module 410 may be characterized by a noise figure. The noise figure of each path is a representation of the degradation of the signal-to-noise ratio (SNR) caused by propagation along the path. In particular, the noise figure of each path may be expressed as the difference in decibels (dB) between the SNR at the input of the pre-amplifier bandpass filter 413a-413d and the SNR at the output of the post-amplifier bandpass filter 423a-4234b. The noise figure of each path may be different for different frequency bands. For example, the first path may have an in-band noise figure for a first frequency band and an out-of-band noise figure for a second frequency band. Similarly, the second path may have an in-band noise figure for the second frequency band and an out-of-band noise figure for the first frequency band.

[0064] The DRx module 410 may also be characterized by a noise figure which may be different for different frequency bands. In particular, the noise figure of the DRx module 410 is the difference in dB between the SNR at the input of the DRx module 410 and the SNR at the output of the DRx module 410.

[0065] Because the signal propagating along two paths are combined by the output multiplexer 312, out-of-band noise produced or amplified by an amplifier can negatively affect the combined signal. For example, out-of-band noise produced or amplified by the first amplifier 314a may increase the noise figure of the DRx module 410 at the second frequency. Thus, the post-amplifier bandpass filter 423a disposed along the path may reduce this out-of-band noise and decrease the noise figure of the DRx module 410 at the second frequency.

[0066] In some implementations, the pre-amplifier bandpass filters 413a-413d and post-amplifier bandpass filters 423a-423d may be designed to be complementary, thereby simplifying filter design and/or achieving similar performance with fewer components at a decreased cost. For example, the post-amplifier bandpass filters 423a disposed along the first path may more strongly attenuate frequencies that the pre-amplifier bandpass filter 413a disposed along the first path more weakly attenuates. As an example, the pre-amplifier bandpass

filter 413a may attenuate frequencies below the first frequency band more than frequencies above the first frequency band. Complimentarily, the post-amplifier bandpass filter 423a may attenuate frequencies above the first frequency band more than frequencies below the first frequency band. Thus, together, the pre-amplifier bandpass filter 413a and post-amplifier bandpass filter 423a attenuate all out-of-band frequencies using fewer components. In general, one of the bandpass filters disposed along a path can attenuate frequencies below the respective frequency band of the path more than frequencies above the respective frequency band and another of the bandpass filters disposed along path can attenuate frequencies above the respective frequency band more than frequencies below the respective frequency band. The pre-amplifier bandpass filters 413a-413d and post-amplifier bandpass filters 423a-423d may be complimentary in other ways. For example, the pre-amplifier bandpass filters 413a disposed along the first path may phase-shift a signal by a number of degrees and the post-amplifier bandpass filter 423a disposed along the first path may oppositely phase-shift the signal the number of degrees.

[0067] In some implementations, the post-amplifier bandpass filters 423a-423d may improve isolation of the paths. For example, without post-amplifier bandpass filters, a signal propagating along the first path may be filtered to the first frequency by the pre-amplifier bandpass filter 413a and amplified by the amplifier 314a. The signal may leak through the output multiplexer 312 to reverse propagate along the second path and reflect off the amplifier 314b, the pre-amplifier bandpass filter 413b, or other components disposed along the second path. If this reflected signal is out-of-phase with the initial signal, this may result in a weakening of the signal when combined by the output multiplexer 312. In contrast, with post-amplifier bandpass filters, the leaked signal (primarily at the first frequency band) is attenuated by the post-amplifier bandpass filter 423b disposed along the second path and associated with the second frequency band, reducing the effect of any reflected signal.

[0068] Thus, the DRx module 410 includes a controller configured to selectively activate one or more of a plurality of paths between an input of a first multiplexer (e.g., the input multiplexer 311) and an output of a second multiplexer (e.g., the output multiplexer 312). The DRx module 410 further includes a plurality of amplifiers 314a-314d, each one of the plurality of amplifiers 314a-314d

disposed along a corresponding one of the plurality of paths and configured to amplify a signal received at the amplifier. The DRx module 410 includes a first plurality of bandpass filters (e.g., the post-amplifier bandpass filters 423a-423d), each one of the first plurality of bandpass filters disposed along a corresponding one of the plurality of paths at an output of a corresponding one of the plurality of amplifiers 314a-314d and configured to filter a signal received at the bandpass filter to a respective frequency band. As shown in Figure 4A, in some implementations, the DRx module 410 further includes a second plurality of bandpass filters (e.g., the pre-amplifier bandpass filters 413a-413d), each one of the second plurality of bandpass filters disposed along a corresponding one of the plurality of paths at an input of a corresponding one of the plurality of amplifiers 314a-314d and configured to filter a signal received at the bandpass filter to a respective frequency band.

[0069] Figure 4B shows that in some embodiments, a diversity receiver configuration 450 may include a diversity RF module 460 with fewer amplifiers than a diversity receiver (DRx) module 410. As mentioned above, in some implementations, a diversity RF module 460 may not include bandpass filters. Thus, in some implementations, one or more amplifiers 424 of the diversity RF module 460 need not be band-specific. In particular, the diversity RF module 460 may include one or more paths, each including an amplifier 424, that are not mapped 1-to-1 with the paths of the DRx module 410. Such a mapping of paths (or corresponding amplifiers) may be stored in the controller 120.

[0070] Accordingly, whereas the DRx module 410 includes a number of paths, each corresponding to a frequency band, the diversity RF module 460 may include one or more paths (from the input of the diversity RF module 460 to the input of the multiplexer 321) that do not correspond to a single frequency band.

[0071] In some implementations (as shown in Figure 4B), the diversity RF module 460 includes a single wide-band or tunable amplifier 424 that amplifies the signal received from the transmission line 135 and outputs an amplified signal to a multiplexer 321. The multiplexer 321 includes a plurality of multiplexer outputs, each corresponding to a respective frequency band. In some implementations, the multiplexer 321 may be implemented as a sample switch. In some implementations, the diversity RF module 460 does not include any amplifiers.

[0072] In some implementations, the diversity signal is a single-band signal. Thus, in some implementations, the multiplexer 321 is a single-pole / multiple-throw (SPMT) switch that routes the diversity signal to one of the plurality of outputs corresponding to the frequency band of the single-band signal based on a signal received from the controller 120. In some implementations, the diversity signal is a multi-band signal. Thus, in some implementations, the multiplexer 421 is a band splitter that routes the diversity signal to two or more of the plurality of outputs corresponding to the two or more frequency bands of the multi-band signal based on a splitter control signal received from the controller 120. In some implementations, diversity RF module 460 may be combined with the transceiver 330 as a single module.

[0073] In some implementations, the diversity RF module 460 includes multiple amplifiers, each corresponding to a set of frequency bands. The signal from the transmission line 135 may be fed into a band splitter that outputs high frequencies along a first path to a high-frequency amplifier and outputs low frequencies along a second path to a low-frequency amplifier. The output of each of the amplifiers may be provided to the multiplexer 321 which is configured to route the signal to the corresponding inputs of the transceiver 330.

[0074] Figure 5 shows that in some embodiments, a diversity receiver configuration 500 may include a DRx module 510 coupled to one or more off-module filters 513, 523. The DRx module 510 may include a packaging substrate 501 configured to receive a plurality of components and a receiving system implemented on the packaging substrate 501. The DRx module 510 may include one or more signal paths that are routed off the DRx module 510 and made available to a system integrator, designer, or manufacturer to support filters for any desired band.

[0075] The DRx module 510 includes a number of paths between the input and the output of the DRx module 510. The DRx module 510 includes a bypass path between the input and the output activated by a bypass switch 519 controlled by the DRx controller 502. Although Figure 5 illustrates a single bypass switch 519, in some implementations, the bypass switch 519 may include multiple switches (e.g., a first switch disposed physically close to the input and a second switch disposed physically close to the output). As shown in Figure 5, the bypass path does not include a filter or an amplifier.

[0076] The DRx module 510 includes a number of multiplexer paths including a first multiplexer 511 and a second multiplexer 512. The multiplexer paths include a number of on-module paths that include the first multiplexer 511, a pre-amplifier bandpass filter 413a-413d implemented on the packaging substrate 501, an amplifier 314a-314d implemented on the packaging substrate 501, a post-amplifier bandpass filter 423a-423d implemented on the packaging substrate 501, and the second multiplexer 512. The multiplexer paths include one or more off-module paths that include the first multiplexer 511, a pre-amplifier bandpass filter 513 implemented off the packaging substrate 501, an amplifier 514, a post-amplifier bandpass filter 523 implemented off the packaging substrate 501, and the second multiplexer 512. The amplifier 514 may be a wide-band amplifier implemented on the packaging substrate 501 or may also be implemented off the packaging substrate 501. In some implementations, one or more off-module paths do not include a pre-amplifier bandpass filter 513, but do include a post-amplifier bandpass filter 523. As described above, the amplifiers 314a-314d, 514 may be variable-gain amplifiers and/or variable-current amplifiers.

[0077] The DRx controller 502 is configured to selectively activate one or more of the plurality of paths between the input and the output. In some implementations, the DRx controller 502 is configured to selectively activate one or more of the plurality of paths based on a band select signal received by the DRx controller 502 (e.g., from a communications controller). The DRx controller 502 may selectively activate the paths by, for example, opening or closing the bypass switch 519, enabling or disabling the amplifiers 314a-314d, 514, controlling the multiplexers 511, 512, or through other mechanisms. For example, the DRx controller 502 may open or close switches along the paths (e.g., between the filters 313a-313d, 513 and the amplifiers 314a-314d, 514) or by setting the gain of the amplifiers 314a-314d, 514 to substantially zero.

[0078] Figure 6 shows that in some embodiments, a diversity receiver configuration 600 may include a DRx module 610 with tunable matching circuits. In particular, the DRx module 610 may include one or more tunable matching circuits disposed at one or more of the input and the output of the DRx module 610.

[0079] Multiple frequency bands received on the same diversity antenna 140 are unlikely to all see an ideal impedance match. To match each frequency band using a compact matching circuit, a tunable input matching circuit 616 may be implemented at the input of the DRx module 610 and controlled by the DRx controller 602 (e.g., based on a band select signal from a communications controller). The DRx controller 602 may tune the tunable input matching circuit 616 based on a lookup table that associates frequency bands (or sets of frequency bands) with tuning parameters. The tunable input matching circuit 616 may be a tunable T-circuit, a tunable PI-circuit, or any other tunable matching circuit. In particular, the tunable input matching circuit 616 may include one or more variable components, such as resistors, inductors, and capacitors. The variable components may be connected in parallel and/or in series and may be connected between the input of the DRx module 610 and the input of the first multiplexer 311 or may be connected between the input of the DRx module 610 and a ground voltage.

[0080] Similarly, with only one transmission line 135 (or, at least, few cables) carrying signals of many frequency bands, it is not likely that multiple frequency bands will all see an ideal impedance match. To match each frequency band using a compact matching circuit, a tunable output matching circuit 617 may be implemented at the output of the DRx module 610 and controlled by the DRx controller 602 (e.g., based on a band select signal from a communications controller). The DRx controller 602 may tune the tunable output matching circuit 618 based on a lookup table that associates frequency bands (or sets of frequency bands) with tuning parameters. The tunable output matching circuit 617 may be a tunable T-circuit, a tunable PI-circuit, or any other tunable matching circuit. In particular, the tunable output matching circuit 617 may include one or more variable components, such as resistors, inductors, and capacitors. The variable components may be connected in parallel and/or in series and may be connected between the output of the DRx module 610 and the output of the second multiplexer 312 or may be connected between the output of the DRx module 610 and a ground voltage.

[0081] Figure 7 shows that in some embodiments, some or all of the diversity receiver configurations (e.g., those shown in Figures 3, 4A, 4B, 5, and 6) can be implemented, wholly or partially, in a module. Such a module can be, for

example, a front-end module (FEM). Such a module can be, for example, a diversity receiver (DRx) FEM. In the example of Figure 7, a module 700 can include a packaging substrate 702, and a number of components can be mounted on such a packaging substrate 702. For example, a controller 704 (which may include a front-end power management integrated circuit [FE-PIMC]), a low-noise amplifier assembly 706 (which may include one or more variable-gain amplifiers), a match component 708 (which may include one or more tunable matching circuits), a multiplexer assembly 710, and a filter bank 712 (which may include one or more pre-amplifier bandpass filters 713 and/or one or more post-amplifier bandpass filters 723) can be mounted and/or implemented on and/or within the packaging substrate 702. Other components, such as a number of SMT devices 714, can also be mounted on the packaging substrate 702. Although all of the various components are depicted as being laid out on the packaging substrate 702, it will be understood that some component(s) can be implemented over other component(s).

[0082] In some implementations, a device and/or a circuit having one or more features described herein can be included in an RF electronic device such as a wireless device. Such a device and/or a circuit can be implemented directly in the wireless device, in a modular form as described herein, or in some combination thereof. In some embodiments, such a wireless device can include, for example, a cellular phone, a smart-phone, a hand-held wireless device with or without phone functionality, a wireless tablet, etc.

[0083] Figure 8 depicts an example wireless device 800 having one or more advantageous features described herein. In the context of one or more modules having one or more features as described herein, such modules can be generally depicted by a dashed box 801 (which can be implemented as, for example, a front-end module), a diversity RF module 811 (which can be implemented as, for example, a downstream module), and a diversity receiver (DRx) module 700 (which can be implemented as, for example, a front-end module)

[0084] Referring to Figure 8, power amplifiers (PAs) 820 can receive their respective RF signals from a transceiver 810 that can be configured and operated in known manners to generate RF signals to be amplified and transmitted, and to process received signals. The transceiver 810 is shown to

interact with a baseband sub-system 808 that is configured to provide conversion between data and/or voice signals suitable for a user and RF signals suitable for the transceiver 810. The transceiver 810 can also be in communication with a power management component 806 that is configured to manage power for the operation of the wireless device 800. Such power management can also control operations of the baseband sub-system 808 and the modules 801, 811, and 900.

[0085] The baseband sub-system 808 is shown to be connected to a user interface 802 to facilitate various input and output of voice and/or data provided to and received from the user. The baseband sub-system 808 can also be connected to a memory 804 that is configured to store data and/or instructions to facilitate the operation of the wireless device, and/or to provide storage of information for the user.

[0086] In the example wireless device 800, outputs of the PAs 820 are shown to be matched (via respective match circuits 822) and routed to their respective duplexers 824. Such amplified and filtered signals can be routed to a primary antenna 816 through an antenna switch 814 for transmission. In some embodiments, the duplexers 824 can allow transmit and receive operations to be performed simultaneously using a common antenna (e.g., primary antenna 816). In Figure 8, received signals are shown to be routed to "Rx" paths that can include, for example, a low-noise amplifier (LNA).

[0087] The wireless device also includes a diversity antenna 826 and a diversity receiver module 700 that receives signals from the diversity antenna 826. The diversity receiver module 700 processes the received signals and transmits the processed signals via a transmission line 835 to a diversity RF module 811 that further processes the signal before feeding the signal to the transceiver 810.

[0088] One or more features of the present disclosure can be implemented with various cellular frequency bands as described herein. Examples of such bands are listed in Table 1. It will be understood that at least some of the bands can be divided into sub-bands. It will also be understood that one or more features of the present disclosure can be implemented with frequency ranges that do not have designations such as the examples of Table 1.

Table 1

Band	Mode	Tx Frequency Range (MHz)	Rx Frequency Range (MHz)
B1	FDD	1,920 – 1,980	2,110 – 2,170
B2	FDD	1,850 – 1,910	1,930 – 1,990
B3	FDD	1,710 – 1,785	1,805 – 1,880
B4	FDD	1,710 – 1,755	2,110 – 2,155
B5	FDD	824 – 849	869 – 894
B6	FDD	830 – 840	875 – 885
B7	FDD	2,500 – 2,570	2,620 – 2,690
B8	FDD	880 – 915	925 – 960
B9	FDD	1,749.9 – 1,784.9	1,844.9 – 1,879.9
B10	FDD	1,710 – 1,770	2,110 – 2,170
B11	FDD	1,427.9 – 1,447.9	1,475.9 – 1,495.9
B12	FDD	699 – 716	729 – 746
B13	FDD	777 – 787	746 – 756
B14	FDD	788 – 798	758 – 768
B15	FDD	1,900 – 1,920	2,600 – 2,620
B16	FDD	2,010 – 2,025	2,585 – 2,600
B17	FDD	704 – 716	734 – 746
B18	FDD	815 – 830	860 – 875
B19	FDD	830 – 845	875 – 890
B20	FDD	832 – 862	791 – 821
B21	FDD	1,447.9 – 1,462.9	1,495.9 – 1,510.9
B22	FDD	3,410 – 3,490	3,510 – 3,590
B23	FDD	2,000 – 2,020	2,180 – 2,200
B24	FDD	1,626.5 – 1,660.5	1,525 – 1,559
B25	FDD	1,850 – 1,915	1,930 – 1,995
B26	FDD	814 – 849	859 – 894
B27	FDD	807 – 824	852 – 869
B28	FDD	703 – 748	758 – 803
B29	FDD	N/A	716 – 728
B30	FDD	2,305 – 2,315	2,350 – 2,360
B31	FDD	452.5 – 457.5	462.5 – 467.5
B33	TDD	1,900 – 1,920	1,900 – 1,920
B34	TDD	2,010 – 2,025	2,010 – 2,025
B35	TDD	1,850 – 1,910	1,850 – 1,910
B36	TDD	1,930 – 1,990	1,930 – 1,990
B37	TDD	1,910 – 1,930	1,910 – 1,930
B38	TDD	2,570 – 2,620	2,570 – 2,620
B39	TDD	1,880 – 1,920	1,880 – 1,920
B40	TDD	2,300 – 2,400	2,300 – 2,400
B41	TDD	2,496 – 2,690	2,496 – 2,690
B42	TDD	3,400 – 3,600	3,400 – 3,600
B43	TDD	3,600 – 3,800	3,600 – 3,800
B44	TDD	703 – 803	703 – 803

[0089] Unless the context clearly requires otherwise, throughout the description and the claims, the words “comprise,” “comprising,” and the like are to be construed in an inclusive sense, as opposed to an exclusive or exhaustive sense; that is to say, in the sense of “including, but not limited to.” The word “coupled”, as generally used herein, refers to two or more elements that may be either directly connected, or connected by way of one or more intermediate elements. Additionally, the words “herein,” “above,” “below,” and words of similar

import, when used in this application, shall refer to this application as a whole and not to any particular portions of this application. Where the context permits, words in the above Description using the singular or plural number may also include the plural or singular number respectively. The word “or” in reference to a list of two or more items, that word covers all of the following interpretations of the word: any of the items in the list, all of the items in the list, and any combination of the items in the list.

[0090] The above detailed description of embodiments of the invention is not intended to be exhaustive or to limit the invention to the precise form disclosed above. While specific embodiments of, and examples for, the invention are described above for illustrative purposes, various equivalent modifications are possible within the scope of the invention, as those skilled in the relevant art will recognize. For example, while processes or blocks are presented in a given order, alternative embodiments may perform routines having steps, or employ systems having blocks, in a different order, and some processes or blocks may be deleted, moved, added, subdivided, combined, and/or modified. Each of these processes or blocks may be implemented in a variety of different ways. Also, while processes or blocks are at times shown as being performed in series, these processes or blocks may instead be performed in parallel, or may be performed at different times.

[0091] The teachings of the invention provided herein can be applied to other systems, not necessarily the system described above. The elements and acts of the various embodiments described above can be combined to provide further embodiments.

[0092] While some embodiments of the inventions have been described, these embodiments have been presented by way of example only, and are not intended to limit the scope of the disclosure. Indeed, the novel methods and systems described herein may be embodied in a variety of other forms; furthermore, various omissions, substitutions and changes in the form of the methods and systems described herein may be made without departing from the spirit of the disclosure. The accompanying claims and their equivalents are intended to cover such forms or modifications as would fall within the scope and spirit of the disclosure.

CLAIMS

1. A receiving system comprising:

a first multiplexer having an input for coupling to a diversity antenna, and a second multiplexer having an output for coupling to a separate receiving circuit;

a controller configured to selectively activate one or more of a plurality of paths between the input of the first multiplexer and the output of the second multiplexer;

a plurality of amplifiers, each one of the plurality of amplifiers disposed along a corresponding one of the plurality of paths and configured to amplify a signal received at the amplifier from the diversity antenna;

a plurality of pre-amplifier bandpass filters, each one of the plurality of pre-amplifier bandpass filters disposed along a corresponding path of the plurality of paths at an input of a corresponding amplifier of the plurality of amplifiers, individual pre-amplifier bandpass filters configured to filter a signal received at the pre-amplifier bandpass filter to a respective frequency band resulting in out-of-band noise that is amplified by the corresponding amplifier; and

a plurality of post-amplifier bandpass filters, each one of the plurality of post-amplifier bandpass filters disposed along a corresponding path of the plurality of paths at an output of a corresponding amplifier of the plurality of amplifiers and configured to filter the signal amplified by the corresponding amplifier to a respective frequency band and to reduce the out-of-band noise amplified by the corresponding amplifier, wherein one of the plurality of post-amplifier bandpass filters disposed along a first path and one of the plurality of pre-amplifier bandpass filters disposed along the first path are complementary.

2. The system of claim 1 wherein one of the pre-amplifier bandpass filters or one of the post-amplifier bandpass filters disposed along the first path attenuates frequencies below a first frequency band more than frequencies above the first frequency band and another of the pre-amplifier bandpass filters or another of the post-amplifier bandpass filters disposed along

the first path attenuates frequencies above the first frequency band more than frequencies below the first frequency band.

3. The system of claim 1 further comprising a transmission line coupled to the output of the second multiplexer and coupled to the separate receiving circuit including a multiplexer.

4. The system of claim 3 wherein the separate receiving circuit does not include a bandpass filter.

5. The system of claim 4 wherein the multiplexer of the separate receiving circuit includes a sample switch.

6. The system of claim 3 wherein the separate receiving circuit includes one or more amplifiers.

7. The system of claim 6 wherein a number of the one or more amplifiers of the separate receiving circuit is less than a number of the plurality of amplifiers.

8. The system of claim 1 wherein at least one of the plurality of amplifiers includes a low-noise amplifier.

9. The system of claim 1 wherein at least one of the plurality of amplifiers includes a variable-gain amplifier.

10. The system of claim 1 further comprising one or more tunable matching circuits disposed at one or more of the input of the first multiplexer and the output of the second multiplexer.

11. The system of claim 1 wherein the controller is configured to selectively activate the one or more of the plurality of paths based on a band select signal received by the controller.

12. The system of claim 1 wherein the controller is configured to selectively activate the one or more of the plurality of paths by transmitting a splitter control signal to the first multiplexer and a combiner control signal to the second multiplexer.

13. A radio-frequency (RF) module comprising:

a packaging substrate configured to receive a plurality of components; and

a receiving system implemented on the packaging substrate, the receiving system including a first multiplexer having an input for coupling to a diversity antenna, and a second multiplexer having an output for coupling to a separate receiving circuit; a

controller configured to selectively activate one or more of a plurality of paths between the input of the first multiplexer and the output of the second multiplexer; a plurality of amplifiers, each one of the plurality of amplifiers disposed along a corresponding one of the plurality of paths and

configured to amplify a signal received at the amplifier from the diversity antenna; and a first plurality of bandpass filters, each one of the first plurality of bandpass filters disposed along a corresponding one of the plurality of paths at an output of a corresponding one of the plurality of amplifiers and configured to filter the signal amplified by the corresponding amplifier to a respective frequency band, and a second plurality of bandpass filters, each one of the second plurality of bandpass filters disposed along a corresponding one of the plurality of paths at an input of a corresponding one of the plurality of amplifiers and configured to filter a signal received at the bandpass filter to a respective frequency band resulting in out-of-band noise that is amplified by the corresponding amplifier and that is reduced by a corresponding bandpass filter of the first plurality of bandpass filters, wherein one of the bandpass filters disposed along the first path attenuates frequencies below a first frequency band more than frequencies above the first frequency band and another of the bandpass filters disposed along the first path attenuates frequencies above the first frequency band more than frequencies below the first frequency band.

14. The RF module of claim 13 wherein the RF module is a diversity receiver module, and the separate receiving circuit is implemented external to the diversity receive module.

15. The RF module of claim 13 wherein the receiving system further includes a second plurality of bandpass filters, each one of the second plurality of bandpass filters disposed along a corresponding one of the plurality of paths at an input of a corresponding one of the plurality of amplifiers and configured to filter a signal received at the bandpass filter from the diversity antenna to a respective frequency band.

16. The RF module of claim 13 wherein the plurality of paths includes an off-module path including an off-module bandpass filter and one of the plurality of amplifiers.

17. A wireless device comprising:

a diversity antenna configured to receive a signal;

a diversity receiver module in communication with the diversity antenna and including a receiving system, the receiving system including a first multiplexer having an

input coupled to the diversity antenna, and a second multiplexer having an output; a controller configured to selectively activate one or more of a plurality of paths between the input of the first multiplexer and the output of the second multiplexer; a plurality of amplifiers, each one of the plurality of amplifiers disposed along a corresponding one of the plurality of paths and configured to amplify the signal; a first plurality of bandpass filters, each one of the first plurality of bandpass filters disposed along a corresponding one of the plurality of paths at an output of a corresponding one of the plurality of amplifiers and configured to filter the signal amplified by the corresponding amplifier to a respective frequency band, and a second plurality of

bandpass filters, each one of the second plurality of bandpass filters disposed along a corresponding one of the plurality of paths at an input of a corresponding one of the plurality of amplifiers and configured to filter a signal received at the bandpass filter to a respective frequency band resulting in out-of-band noise that is amplified by the corresponding amplifier and that is reduced by a corresponding bandpass filter of the first plurality of bandpass filters, wherein one of the bandpass filters disposed along the first path attenuates frequencies below a first frequency band more than frequencies above the first frequency band and another of the bandpass filters disposed along the first path attenuates frequencies above the first frequency band more than frequencies below the first frequency band;

a separate receiver circuit external to the diversity receiver module and coupled to the output of the second multiplexer through a transmission line; and

a transceiver coupled to the separate receiver circuit, and configured to further process a signal processed by the diversity receiver module and the separate receiver circuit.

18. The wireless device of claim 17 further comprising a primary antenna and a front-end module in communication with the primary antenna, the transceiver being configured to process a signal associated with the front-end module and the primary antenna.

19. The wireless device of claim 17 wherein the receiving system further includes a second plurality of bandpass filters, each one of the second plurality of bandpass filters disposed along a corresponding one of the plurality of paths at an input of a corresponding one of the plurality of amplifiers and configured to filter a signal received at the bandpass filter from the diversity antenna to a respective frequency band.

20. The system of claim 1 wherein an individual pre-amplifier bandpass filter disposed along the first path phase shifts signals through a first phase shift and an individual post-amplifier bandpass filter disposed along the first path phase shifts the signals through a second phase shift that is opposite to the first phase shift.

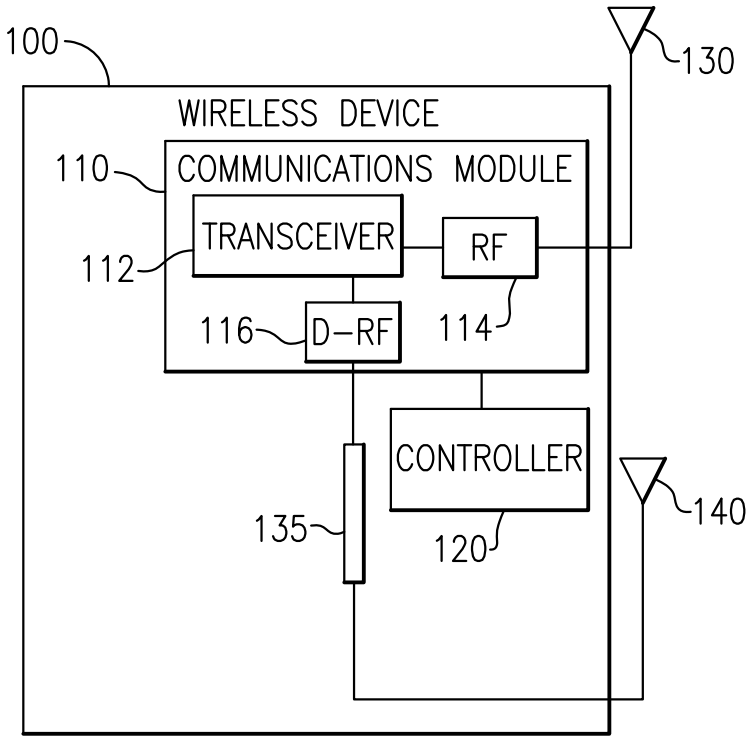
100
WIRELESS DEVICE
110
COMMUNICATIONS MODULE
TRANSCEIVER
112
RF
116
D-RF
114
CONTROLLER
135
120
130
140

FIG.1

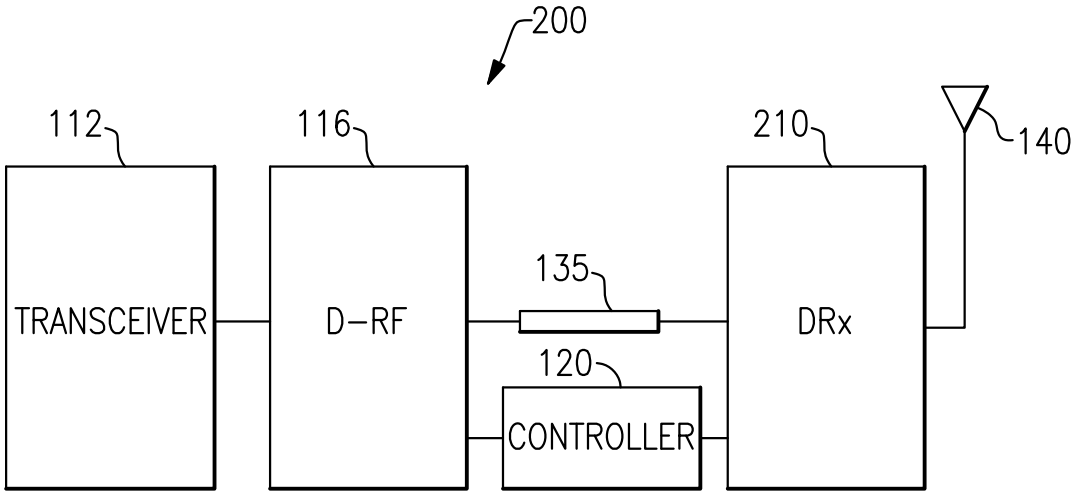
200
112
116
210
140
TRANSCEIVER
D-RF
135
DRx
120
CONTROLLER

FIG.2

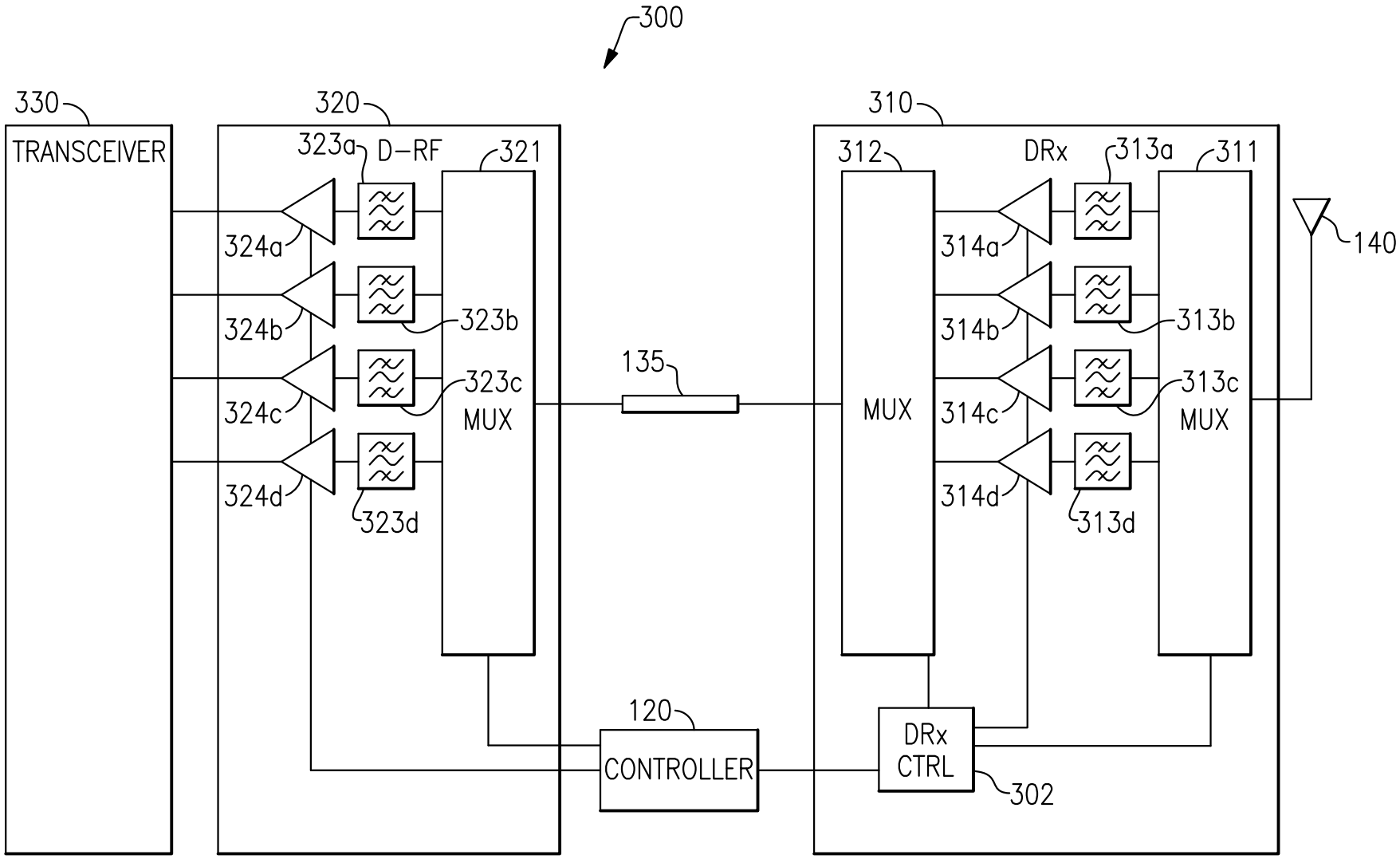
300
330
TRANSCEIVER
320
323a
D–RF
321
324a
324b
324c
324d
323b
323c
MUX
323d
135
120
CONTROLLER
310
312
MUX
DRx
313a
311
314a
314b
314c
314d
313b
313c
MUX
313d
DRx
CTRL
302
140

FIG.3

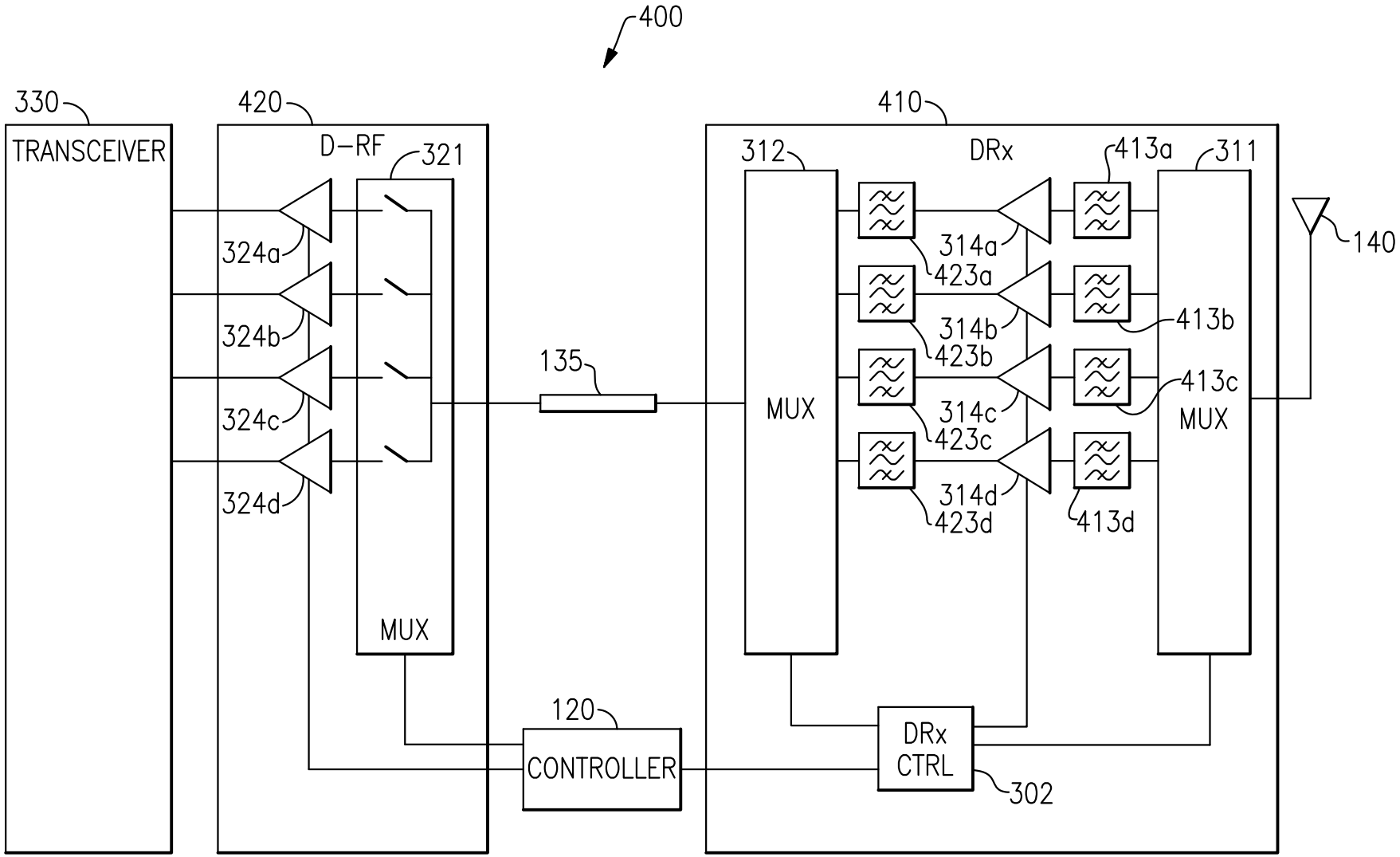
400
330
TRANSCEIVER
420
D-RF
321
324a
324b
324c
324d
MUX
135
120
CONTROLLER
410
DRx
312
MUX
314a
423a
314b
423b
314c
423c
314d
423d
413a
413b
413c
413d
311
MUX
140
DRx
CTRL
302

FIG.4A

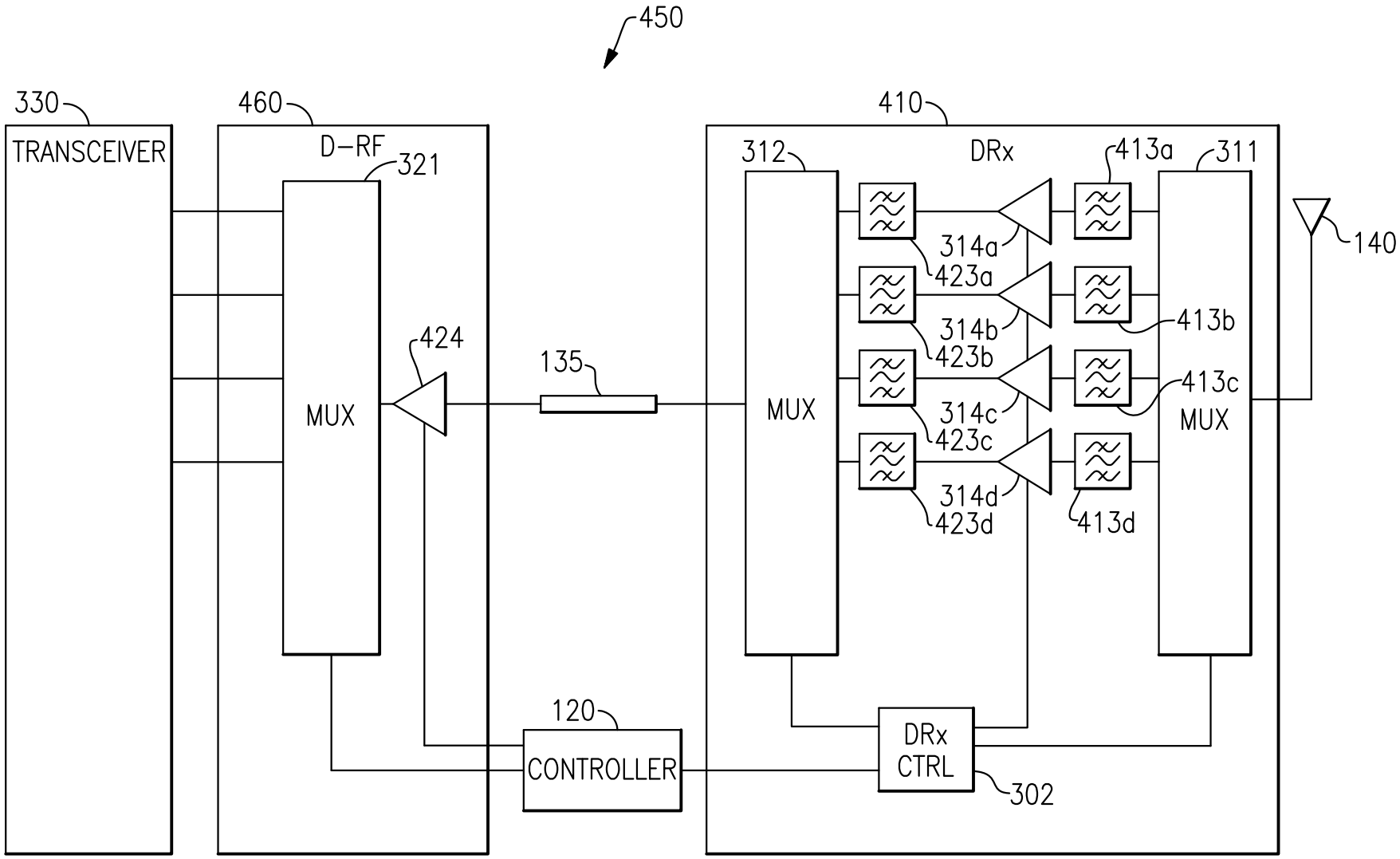
450
330
TRANSCEIVER
460
D-RF
321
MUX
424
135
120
CONTROLLER
410
312
MUX
DRx
314a
423a
314b
423b
314c
423c
314d
423d
413a
413b
413c
413d
311
MUX
140
DRx
CTRL
302

FIG.4B

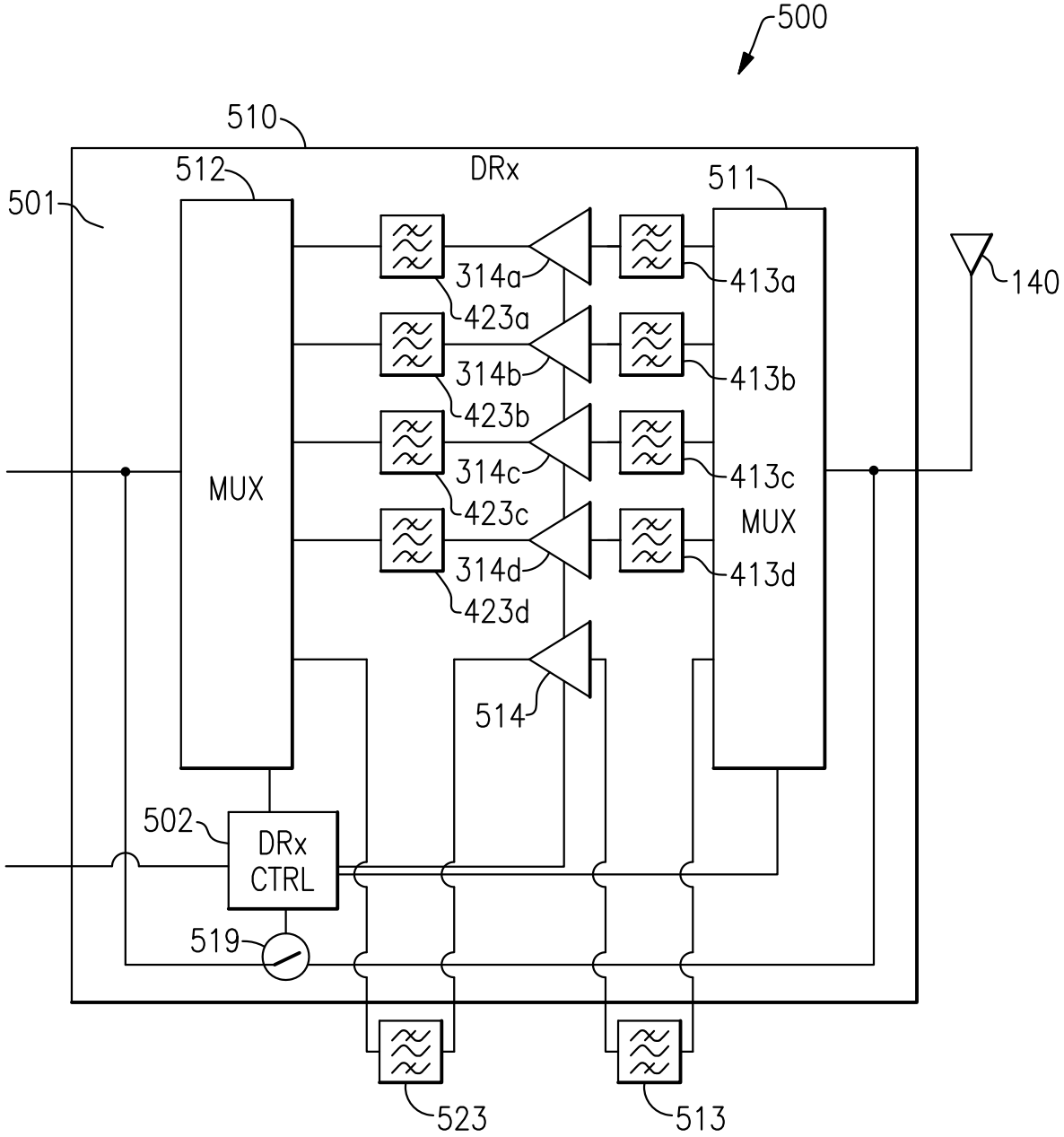
500
510
DRx
512
511
501
MUX
314a
423a
314b
423b
314c
423c
314d
423d
413a
413b
413c
413d
MUX
140
514
502
DRx
CTRL
519
523
513

FIG.5

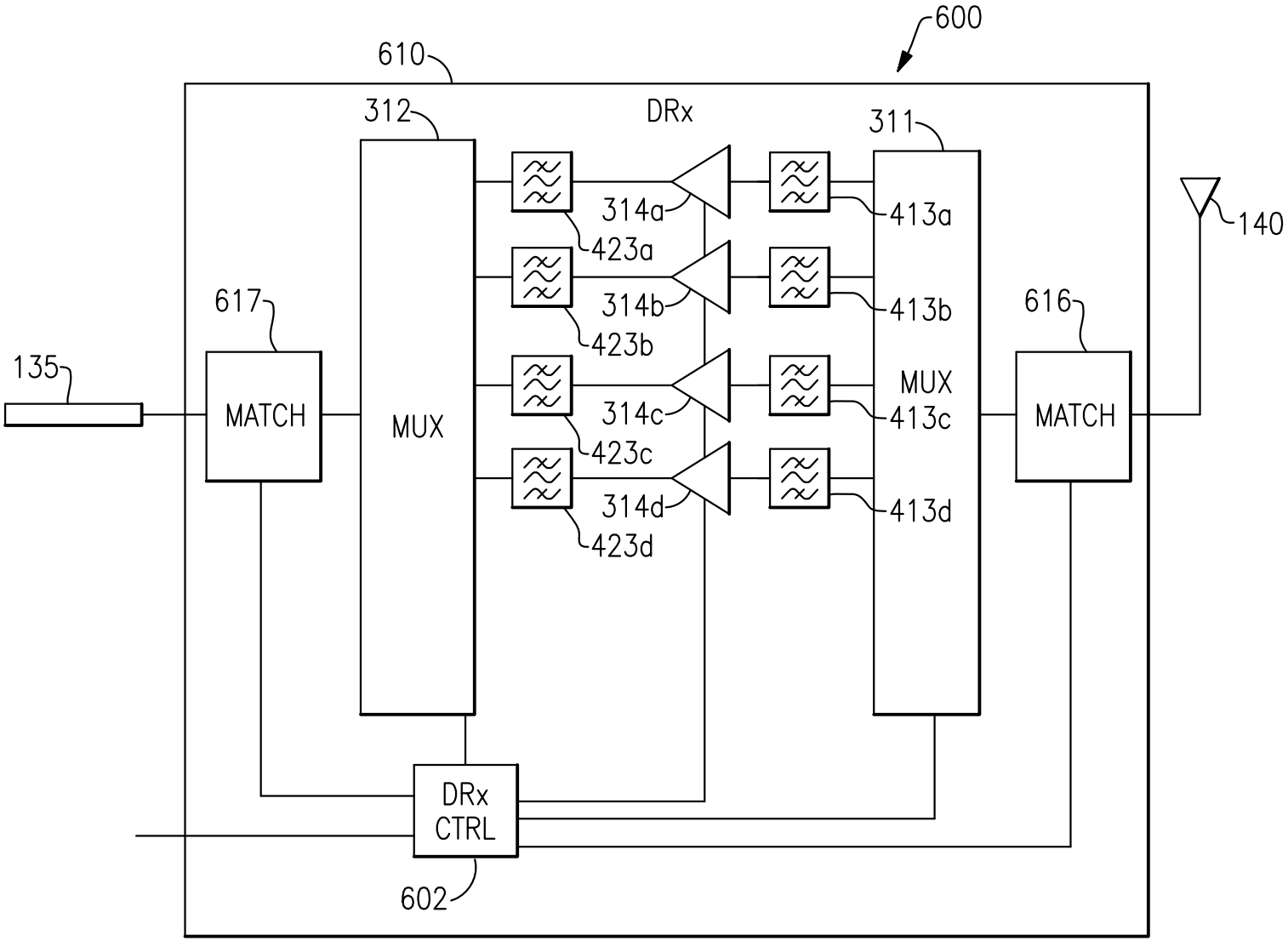
600
610
DRx
312
311
314a
423a
413a
314b
423b
413b
617
616
135
MATCH
MUX
314c
423c
MUX
413c
MATCH
140
314d
423d
413d
DRx
CTRL
602

FIG.6

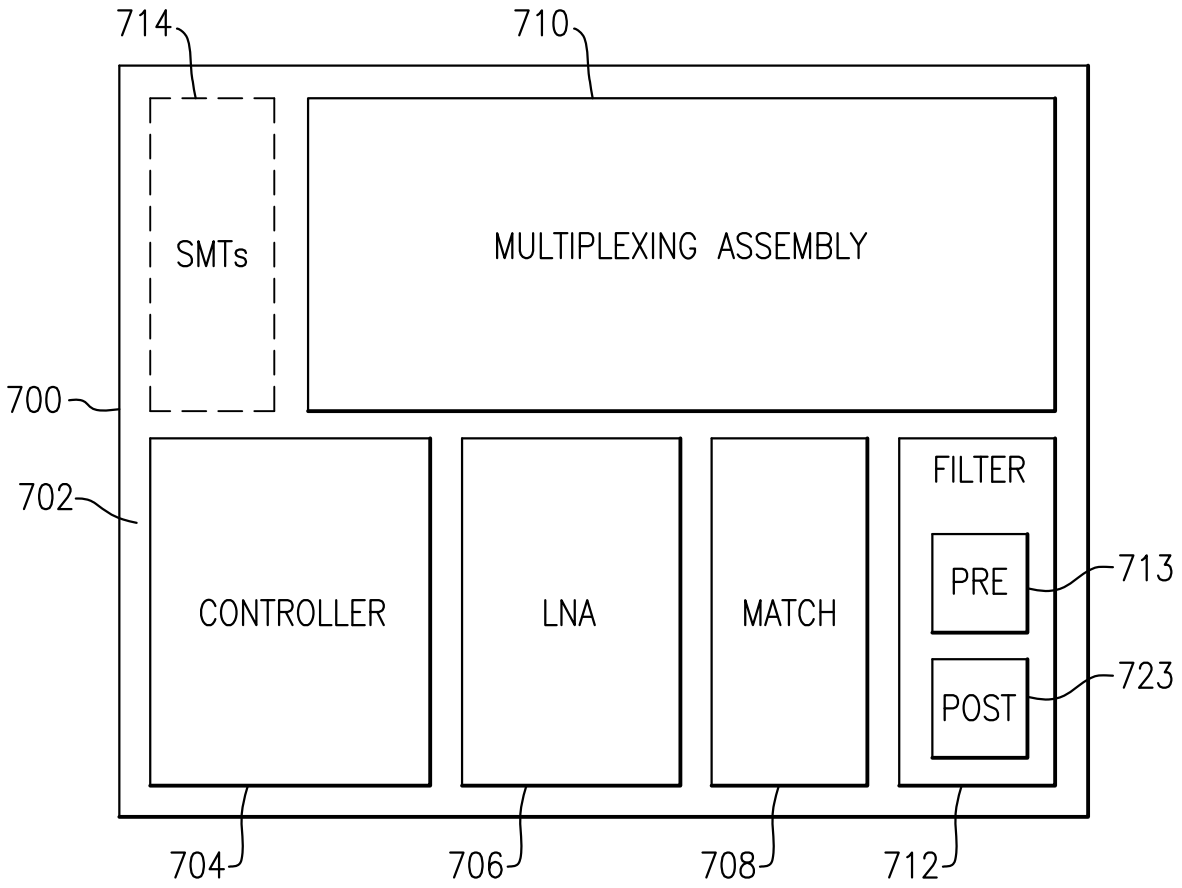
714
710
SMTs
MULTIPLEXING ASSEMBLY
700
702
CONTROLLER
LNA
MATCH
FILTER
PRE
713
POST
723
704
706
708
712

FIG.7

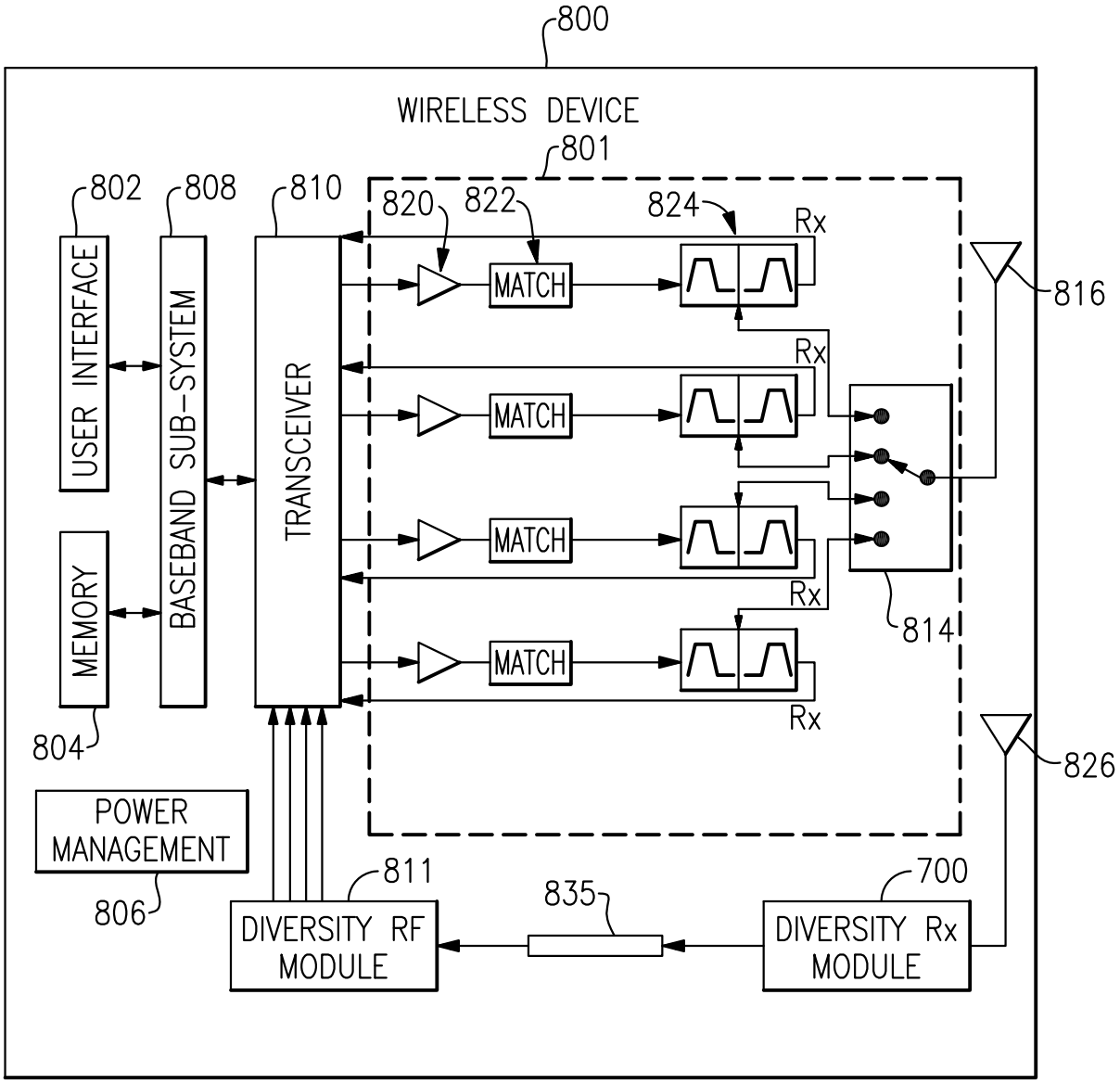
800
WIRELESS DEVICE
801
802
808
810
820
822
824
Rx
USER INTERFACE
BASEBAND SUB-SYSTEM
TRANSCEIVER
MATCH
816
814
MEMORY
804
826
POWER MANAGEMENT
806
811
835
700
DIVERSITY RF MODULE
DIVERSITY Rx MODULE

FIG.8