(12) INTERNATIONAL APPLICATION PUBLISHED UNDER THE PATENT COOPERATION TREATY (PCT)

(19) World Intellectual Property Organization
International Bureau

(43) International Publication Date
12 September 2025 (12.09.2025)

WIPO | PCT

(10) International Publication Number
WO 2025/186737 A1

(51) International Patent Classification:
G01N 29/22 (2006.01) *G01N 29/28* (2006.01)
G01N 29/265 (2006.01)

(21) International Application Number:
PCT/IB2025/052390

(22) International Filing Date:
05 March 2025 (05.03.2025)

(25) Filing Language: English

(26) Publication Language: English

(30) Priority Data:
102024000004864 05 March 2024 (05.03.2024) IT

(71) Applicant: **FLYABILITY SA** [CH/CH]; Route Cantonale, EPFL Innovation Park, Building C, 1015 LAUSANNE (CH).

(72) Inventors: **JAMOLLI, Kevin**; Ch. des Vignes 27, 1009 PULLY (CH). **KELLER, Damiano**; Avenue de la Confrérie 44, 1008 PRILLY (CH). **SAMUEL, Paul**; Route de la Feuillère 23, 1010 LAUSANNE (CH).

(74) Agent: **MILAN, Guglielmo** et al.; CANTALUPPI & PARTNERS S.R.L., P.tta C. Pedrocchi, 18, 35122 Padova (IT).

(81) Designated States *(unless otherwise indicated, for every kind of national protection available)*: AE, AG, AL, AM, AO, AT, AU, AZ, BA, BB, BG, BH, BN, BR, BW, BY, BZ, CA, CH, CL, CN, CO, CR, CU, CV, CZ, DE, DJ, DK, DM, DO, DZ, EC, EE, EG, ES, FI, GB, GD, GE, GH, GM, GT, HN, HR, HU, ID, IL, IN, IQ, IR, IS, IT, JM, JO, JP, KE, KG, KH, KN, KP, KR, KW, KZ, LA, LC, LK, LR, LS, LU, LY, MA, MD, MG, MK, MN, MU, MW, MX, MY, MZ, NA, NG, NI, NO, NZ, OM, PA, PE, PG, PH, PL, PT, QA, RO, RS, RU, RW, SA, SC, SD, SE, SG, SK, SL, ST, SV, SY, TH,

WO 2025/186737 A1

(54) Title: NON-DESTRUCTIVE TESTING ("NDT") DEVICE PARTICULARLY FOR UNMANNED AERIAL VEHICLE ("UAV"), UAV AND KIT FOR NDT COMPRISING THE DEVICE

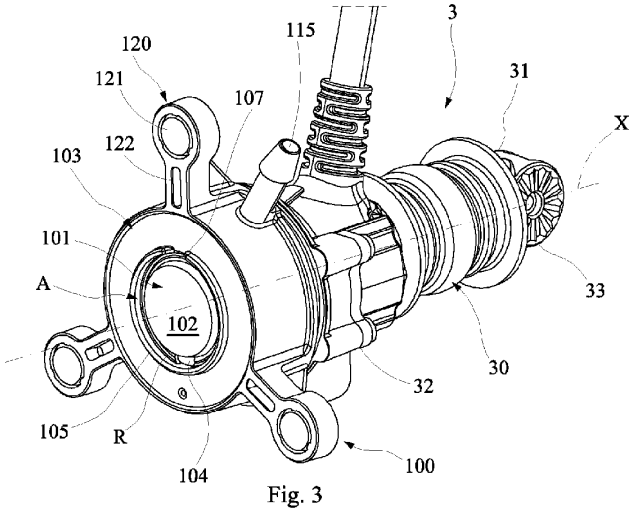

Fig. 3

(57) Abstract: A non-destructive testing device (100), particularly for an unmanned aerial vehicle, comprises a contact sensor (101) having a sensor surface (102) configured to contact a target to be tested and a couplant dispensing nozzle (103) attached to the contact sensor and configured to deliver couplant onto the sensor surface. The couplant dispensing nozzle is provided with a couplant dispensing section (104) and a ridge (105). The ridge at least partially surrounds a testing area (A) where the sensor surface and the dispensing section are located. The ridge (105) is configured to create a tight fit to the target during testing so as to at least partially contain between the testing area and the target the couplant dispensed through the dispensing section (104).

[Continued on next page]

TJ, TM, TN, TR, TT, TZ, UA, UG, US, UY, UZ, VC, VN, WS, ZA, ZM, ZW.

(84) **Designated States** *(unless otherwise indicated, for every kind of regional protection available)*: ARIPO (BW, CV, GH, GM, KE, LR, LS, MW, MZ, NA, RW, SC, SD, SL, ST, SZ, TZ, UG, ZM, ZW), Eurasian (AM, AZ, BY, KG, KZ, RU, TJ, TM), European (AL, AT, BE, BG, CH, CY, CZ, DE, DK, EE, ES, FI, FR, GB, GR, HR, HU, IE, IS, IT, LT, LU, LV, MC, ME, MK, MT, NL, NO, PL, PT, RO, RS, SE, SI, SK, SM, TR), OAPI (BF, BJ, CF, CG, CI, CM, GA, GN, GQ, GW, KM, ML, MR, NE, SN, TD, TG).

Declarations under Rule 4.17:

— *of inventorship (Rule 4.17(iv))*

Published:

— *with international search report (Art. 21(3))*