3 FEB 2004

(12) INTERNATIONAL APPLICATION PUBLISHED UNDER THE PATENT COOPERATION TREATY (PCT)

(19) World Intellectual Property Organization
International Bureau

(43) International Publication Date
21 December 2000 (21.12.2000)

PCT

(10) International Publication Number
WO 00/76663 A1

(51) International Patent Classification[7]: B01L 3/00, G01N 21/25, 35/02

(21) International Application Number: PCT/GB00/02251

(22) International Filing Date: 9 June 2000 (09.06.2000)

(25) Filing Language: English

(26) Publication Language: English

(30) Priority Data:
9913561.8 10 June 1999 (10.06.1999) GB

(71) Applicant *(for all designated States except US)*: **PROVALIS DIAGNOSTICS LIMITED** [GB/GB]; Newtech Square, Deeside Industrial Park, Deeside, Flintshire CH5 2NT (GB).

(72) Inventors; and
(75) Inventors/Applicants *(for US only)*: **ANDREWES, David** [GB/GB]; 5 Ridgeway Road, Farnham, Surrey GU9 8NN (GB). **O'DELL, John, Anthony** [GB/GB]; 24 Halford Road, Fulham, London SW6 1JT (GB). **STEVENSON, Anthony** [GB/GB]; 4 Beaumont Close, Chester CH4 8PT (GB). **CURTIS, John** [GB/GB]; Balderton House, Balderton, Chester CH4 9FL (GB). **GRAY, Adrian, Richard** [GB/GB]; West End House, Vaughans Lane, Chester CH3 5XF (GB). **VESSEY, John, Philip** [GB/GB]; Canna, Forest Road, East Horsley, Surrey KT24 5BT (GB). **FERNANDO, Felix** [GB/GB]; 24 Tudor Close, Wokingham, Berks RG40 2LU (GB). **CRESWELL, Mark** [GB/GB]; 11 Main Road, Broughton, Chester CH4 0NW (GB). **PERCIVAL, David, Alan** [GB/GB]; 4 Overlea Drive, Hawarden, Flintshire CH5 3HS (GB). **ATTRIDGE, John, Worthington** [GB/GB]; Oaksbridge, Send Marsh Road, Ripley, Surrey CH23 6JR (GB).

(74) Agent: **W.P. THOMPSON & CO.**; Coopers Building, Church Street, Liverpool L1 3AB (GB).

(81) Designated States *(national)*: AE, AG, AL, AM, AT, AU, AZ, BA, BB, BG, BR, BY, CA, CH, CN, CR, CU, CZ, DE,

[Continued on next page]

(54) Title: APPARATUS, INSTRUMENT AND DEVICE FOR CONDUCTING AN ASSAY

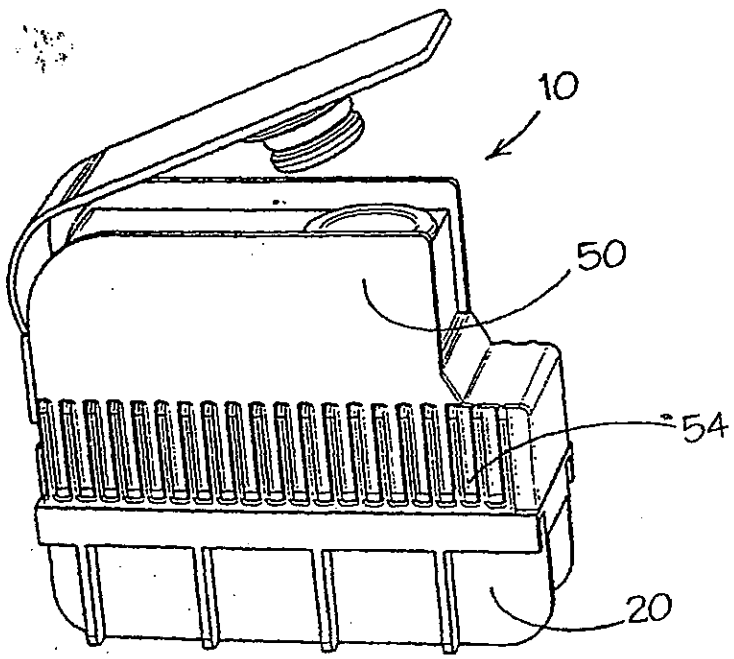

(57) Abstract: The present invention relates to an apparatus, instrument and device for conducting an assay. The apparatus comprises a first inlet (12), a second inlet (14) and an inlet port (16) accommodating a filter or binder retaining means, wherein said inlet port is moveable relative to first and second inlets such that the inlet port can be brought into liquid communication with each inlet as required.

WO 00/76663 A1

WO 00/76663 A1

DK, DM, DZ, EE, ES, FI, GB, GD, GE, GH, GM, HR, HU, ID, IL, IN, IS, JP, KE, KG, KP, KR, KZ, LC, LK, LR, LS, LT, LU, LV, MA, MD, MG, MK, MN, MW, MX, MZ, NO, NZ, PL, PT, RO, RU, SD, SE, SG, SI, SK, SL, TJ, TM, TR, TT, TZ, UA, UG, US, UZ, VN, YU, ZA, ZW.

(84) **Designated States** *(regional)*: ARIPO patent (GH, GM, KE, LS, MW, MZ, SD, SL, SZ, TZ, UG, ZW), Eurasian patent (AM, AZ, BY, KG, KZ, MD, RU, TJ, TM), European patent (AT, BE, CH, CY, DE, DK, ES, FI, FR, GB, GR, IE, IT, LU, MC, NL, PT, SE), OAPI patent (BF, BJ, CF, CG, CI, CM, GA, GN, GW, ML, MR, NE, SN, TD, TG).

Published:

— *With international search report.*

For two-letter codes and other abbreviations, refer to the "Guidance Notes on Codes and Abbreviations" appearing at the beginning of each regular issue of the PCT Gazette.

DESCRIPTION

APPARATUS, INSTRUMENT & DEVICE FOR CONDUCTING AN ASSAY

The present invention relates to an apparatus, instrument and device for conducting an assay. More particularly is relates to a device suitable for use in assaying analyses, for example glycated protein, in a sample, such as for example, blood.

The applicant has devised an apparatus, instrument and device for conducting an assay as disclosed in PCT/GB98/033586. The apparatus comprises a first inlet, a second inlet, and an inlet port, said inlet port being movable relative to each of said first and second inlets such that the inlet port can be brought into liquid communication with each inlet in turn as required, said inlet port accommodating a filter means or a binder retaining means.

In use a sample is separated into a first component fraction and a second component fraction and the component fractions are assayed to determine the presence of one or more analyses in said sample fractions.

The component fractions are read in an instrument comprising a microprocessor operable via a keypad, one or more light emitters and one or more light detectors, a display and driver, an analogue to digital converter and means for connecting the instrument to a power source.

The apparatus takes the form of a carousel. It comprises a base portion having a plurality of chambers including first and second inlets, and a top portion which together with the base portion forms the carousel. A funnel portion comprising an inlet port is in

liquid communication with said inlets.

In use the assay reagents are opened and added sequentially by the user such as a doctor or patient.

It would be desirable to provide an apparatus, instrument and device for conducting an assay which is simpler to use and is less prone to user error. It would also be advantageous if such an apparatus could be produced cheaply.

According to a first aspect of the present invention there is provided an apparatus, for use in an assay in which a sample is presented to an instrument, comprising a first component including a first inlet and a second inlet and an inlet port, said inlet port being movable relative to each of said first and second inlets such that the inlet port can be brought into liquid communication with each inlet in turn as required such that liquid is capable of flowing via the inlet port into the respective inlet, said inlet port accommodating a filter means or a binder retaining means characterised in that said inlet port is brought into liquid communication with each inlet in turn along a linear path.

Preferably the apparatus takes the form of a cartridge.

Preferably the cartridge comprises a first component including the at least first and second inlets, which are or include optical chambers; a second component comprising said inlet port, a third component or components comprising a sample receiving chamber and at least one other chamber, said at least one other chamber containing an eluting medium. Said second component is slidably disposed below the receiving chambers in said third component and above the optical chambers in the first component.

Preferably the second component seals the sample receiving chamber of the third

component so that liquids stored or pre-loaded into the chambers are only released when the inlet ports formed therein are aligned with the optical chambers in the first component. Alignment is achieved by sliding the second component along a linear path. Additional sealing means could, however, be deployed to prevent leakage.

Preferably the second component is provided with a handle or other means by which the component can be moved.

Preferably the apparatus is manufactured in a manner enabling easy filling of the chambers. Thus it is preferred that the third component comprises a resilient component and a cover. Preferably the resilient component comprises a plug closure.

To assemble and fill the apparatus the various components are assembled as follows:

1. The resilient component comprising, for example, three chambers is placed in the cover;

2. The plug closure pivots into place;

3. The assay liquids are poured into the 1st chamber, 2nd chamber and 3rd chamber;

4. The filter and/or binding means is located in the inlet port of the 2nd component and this is slid into the 3rd component;

5. The 1st component, including the 1st and 2nd inlets comprising optical chambers, is clipped into place, thus forming the cartridge.

Preferably the third component comprises a channel within which the 2nd component slides.

The easier it is to use a product the more acceptable it is. By following a linear path the sequence of operations can be simplified to:

The easier it is to use a product the more acceptable it is. By following a linear path the sequence of operations can be simplified to:

1. Unpack the cartridge;

2. Rest the cartridge on a surface and pull open the closure;

3. Take, for example, a blood sample using a loop;

4. Place the blood sample into the open chamber;

5. Replace the plug closure;

6. Shake the cartridge;

7. Insert the cartridge into an instrument.

The cartridge is designed to be inserted into the instrument in one orientation and is provided with locator lugs to ensure correct orientation.

According to a further aspect of the present invention there is provided a device comprising an instrument for reading a sample presented in an apparatus and an apparatus of the invention, the instrument comprising a microprocessor operable via a key pad, one or more light emitters and one or more light detectors, a display and driver, an analogue to digital converter, and means for connecting the instrument to a power source, characterised in that the instrument comprises an elongate track adapted to bring an apparatus into a reading position.

Preferably the device includes a filter for selecting a suitable wavelength.

The next series of steps are operated from the instrument. The instrument is designed such that at the completion of the testing the cartridge cannot be removed until returned to the start position. This is to seal the spent cartridge and to have the instrument ready for the next test.

The cartridge provides user simplicity. The cartridge benefits from the following features:

There is only one closure and this cannot be removed.

The first component, which is clear has a plurality of projecting fins on its side which give stability when loading the sample, and unsure correct orientation into the instrument and helps prevent fingerprinting the surface.

The filter is hidden, inaccessible and being totally enclosed is immune to violent shaking.

The liquids, their chambers and the filter slide surfaces are enclosed and are not easily contaminated.

In normal usage the user cannot unintentionally operate the cartridge until installed in the instrument.

In one embodiment the faces of the optical chambers can be curved.

The filter is fully aligned with the chamber apertures before air can enter. This means the product drops by gravity only when the chambers are fully aligned. The aim being fast emptying and agitation. The air tubes are positioned to allow this.

The disposable cartridge has only a few parts.

3 FEB 2004

The cartridge benefits from a non-return snap together assembly.

The cartridge benefits from reduced size compared to a carousel, and can be easily packaged in multiples.

The construction means the cartridge is fully sealed for after-use disposal.

The construction allows for a possible reduction in instrument size.

The invention will be now described, by way of example only, with reference to the following figures in which:

Fig. 1 is a perspective view of a cartridge of the invention.

Fig. 2 is an exploded view showing the component parts of the cartridge of Fig. 1;

Fig. 3 is a cross section through the cartridge of Fig. 1; and

Figs. 4 to 7 show cross-sections of the cartridge in an instrument at various stages during an assay procedure.

Referring to Figs. 1 to 3 the apparatus 10 of the invention takes the form of a cartridge. It comprises a first inlet 12, a second inlet 14 and an inlet port 16. The inlet port 16 comprises a filter 18 capable of retaining a binder retaining means.

The cartridge is constructed from a number of component parts. A first component part 20 is made of a clear material, for example, plastics, most preferably acrylic, and houses optical chambers 12 and 14. An additional chamber 13 is disposed between optical chambers 12 and 14 and functions as a wash chamber.

A second component 30 comprises two parts, a resilient component 40 and a cover 50.

The resilient component 40 comprises an elongate channel 42 (partially obscured) into which a third component 60 is slidably mounted. The third component comprises an inlet port 16 in which is housed a filter and/or binder retaining means 18 and a handle 64.

To construct the cartridge 10 the resilient component 40, which is made of rubber, is placed into cover 50. The rubber component 40 comprises three openings 44, 45, 46, which extend into the elongate channel 42. These openings, which are closed to form sample receiving chambers 24, 25, 26 by slide component 60, house various assay liquids. In the case of an assay for determining glycated and non-glycated proteins in haemoglobin the resulting sample receiving chambers 24, 25, and 26 contain respectively,

1) a buffer and an amino phenylboronate agarose matrix,

2) a wash buffer, and

3) an eluting buffer.

Extending and pivoting from one end of the rubber component 40 is a closure lid 47 which seals an aperture 52 in the cover 50 which leads into the filling chamber 24. At the side of each chamber 24, 25 and 26 is an air relief tube 48 which co-operates with an aperture (not shown) in the slide 60 such that when the inlet port 16 is correctly aligned with each chamber 24, 25 and 26 the aperture is aligned with the associated air relief tube thereby causing an air lock to break thus causing release of the chamber contents through the filter into the inlet there below. The component 40 further comprises a plurality of mating members 49 which allow it to be connected to component parts 20 and 50.

The first component comprises windows 72 and 74 which are inset from the main

cartridge surface 76. By having the article windows inset and having projecting fins 78 on either side of the windows, fingerprints, can be avoided and the component strengthened. The second component 60 is preferably "I" shaped in cross section so that it can run against a number of surfaces ensuring a good sealing and preventing leakage from the respective chambers. It also has a handle 64 which can be held in a reading instrument; preferably on the track on which the cartridge runs.

The cover 50, has a toothed surface 54 which teeth provide a means by which the cartridge can be caused to move along a track 80 of a reading instrument.

To assemble and fill the cartridge the rubber component 40 is placed into the cover 50 and the plug closure 47 pivots to close aperture 52. The test liquids are then poured into the chambers 44, 45 and 46. The 3rd component slide 60, with filter 18 then slid into the channel 42 of the rubber component 40 thereby sealing the chamber 44, 45 and 46. The first component is then clipped into place thereby completing assembly.

The device is used in an assay as follows:

1) The cartridge is unpacked and the closure 47 opened.

2) A finger-prick blood sample is collected into a loop and placed into chamber 44 through aperture 52. The chamber comprises a buffer and an amino phenyl boronate (aPBA) agarose affinity matrix. The chamber is closed and the cartridge inverted several times, causing the red blood cells to be lysed thus liberating the haemoglobin.

3) The tube is left for approximately 60-90 seconds, with occasional inversion, during which the glycated haemoglobin present in the sample binds to the aPBA affinity

matrix.

4) During this time, the apparatus 10, which is designed to be disposable, is placed on the track 80 of an instrument which will read the samples and calculate and display the results (Fig. 4).

5) After about 60-90 seconds incubation, the inlet port 16 of the slide component is caused to move relative to the chambers 44, 45 and 46 and the corresponding chambers 12, 13, and 14. In fact the slide is held in position by locking handle 64 into a stop 82 on the track and the cartridge is caused to move along the track 80 by utilising the teeth 54 on the cover 50 to propel the cartridge.

6) When the inlet port 16 is aligned with the first inlet 12 and the first chamber 44 the first air relief tube 48 is caused to break releasing the contents of the first chamber 44 into contact with the filter 16. (Fig 5) The liquid contents of the chamber drain through the filter and are collected in the optical chamber 12. The aPBA affinity matrix, however, is too large to pass through the filter and therefore collects in the inlet port 16.

7) The liquid contents collect in the first optical chamber which contains the non-glycated haemoglobin present in the original sample, the aPBA affinity matrix collected in the inlet port 16 contains the glycated haemoglobin present in the original sample.

8) On completion of this first step, the instrument progresses to stage 2, which is accomplished by causing the cartridge to move along the track and stop at position 2 (Fig. 6). Again, under direction from the instrument the wash buffer from chamber 45 is released into chamber 13 via inlet port 16 and allowed to drain through. This step is to remove any

non-specifically bound non-glycated haemoglobin from the aPBA affinity matrix that may be present from step 1.

9) The instrument progresses to stage 3 and the contents of the chamber 46 is released into chamber 14 via inlet port 16. The elution buffer removes the glycated haemoglobin from the aPBA affinity matrix. (Fig. 7).

10) During the above the instrument spectrophotometrically measures the absorbance of both the non-glycated and the glycated haemoglobin fractions present in the two optical chambers. Using an algorithm built into the instruments software, the % glycated haemoglobin present in the original whole blood sample is calculated and displayed on the display.

11) The apparatus returns to its starting position, is disconnected from the instrument and is discarded as biohazardous waste. The instrument is then ready to perform the next test.

Whilst the invention has been described with reference to an assay for determining the % levels of glycated haemoglobin, the skilled man will appreciate that the number of inlets and chambers and the assay liquids will vary for other assay systems.

CLAIMS

1. An apparatus 10, for use in an assay in which a sample is presented to an instrument, comprising a first component including a first inlet 12 and a second inlet 14 and an inlet port 16, said inlet port being movable relative to each of said first and second inlets such that the inlet port can be brought into liquid communication with each inlet in turn as required such that liquid is capable of flowing via the inlet port into the respective inlet, said inlet port accommodating a filter means or a binder retaining means 18 characterised in that said inlet port is brought into liquid communication with each inlet in turn along a linear path.

2. An apparatus as claimed in claim 1 which is a cartridge.

3. An apparatus as claimed in claim 1 or 2 comprising a first component 20 including the at least first and second inlets 12,14, which are or include optical chambers; a second component 60 comprising said inlet port 16; a third component 30 or components 40,50 comprising a sample receiving chamber 44 and at least one other chamber 46, said at least one other chamber containing an eluting medium.

4. An apparatus as claimed in claim 3 wherein said second component is slidably disposed below the sample receiving chamber in said third component and above the optical chambers in the first component.

5. An apparatus as claimed in claim 3 or 4 in which the second component seals the sample receiving chamber of the third component so that liquids stored or pre-loaded into the chamber are only released when the inlet ports formed therein are aligned with the optical chambers in the first component.

6. An apparatus as claimed in claim 5 further comprising additional sealing means.

7. An apparatus as claimed in any of claims 3 to 6 in which the second component is provided with a handle or other means by which it can be moved.

8. An apparatus as claimed in any of claims 3 to 7 in which the third component comprises a resilient component and a cover.

9. An apparatus as claimed in claim 8, in which the resilient component comprises a plug closure.

10. An apparatus as claimed in any of claims 3 to 9 in which the third component comprises a channel within which the second component slides.

11. An apparatus as claimed in any of the preceding claims further comprising locator lugs to ensure correct orientation in a measuring instrument.

12. An apparatus as claimed in any of claims 3 to 11 further comprising a plurality of fins projecting from the first component.

13. An apparatus as claimed in any of the preceding claims in which the optical chambers are curved.

14. An apparatus as claimed in any of the preceding claims comprising air relief tubes.

15. An apparatus as claimed in any of claims 3 to 14 wherein the first component is made of a clear material.

16. An apparatus as claimed in any of claims 3 to 15 in which the third component comprises two parts, a resilient component and a cover.

17. An apparatus as claimed in any of claims 8 to 16 wherein the resilient component comprises an elongate channel into which the second component is slidably mounted.

18. An apparatus as claimed in claim 14 wherein each air relief tube co-operates with an aperture in the second component such that when the inlet port is correctly aligned with each chamber the aperture is aligned with the associated air relief tube thereby causing an air lock to break thus causing release of the chamber contents through the filter into the inlet there below.

19. An apparatus as claimed in any of claims 3 to 18 wherein the first component comprises windows which are inset from the main apparatus surface.

20. An apparatus as claimed in any of claims 3 to 19 wherein the third component is "I" shaped in cross section.

21. An apparatus as claimed in any of the preceding claims wherein the apparatus has a toothed surface which teeth provide a means by which the apparatus can be caused to move along a track of a reading instrument.

22. A device comprising an instrument for reading a sample presented in an apparatus and an apparatus as claimed in any one of the preceding claims, the instrument comprising a microprocessor operable via a key pad, one or more light emitters and one or more light detectors, a display and driver, an analogue to digital converter, and means for connecting the instrument to a power source, characterised in that the instrument comprises an elongate track adapted to bring an apparatus into a reading position.

23. A device as claimed in claim 22 further comprising a filter for selecting a suitable wavelength.