(12) INTERNATIONAL APPLICATION PUBLISHED UNDER THE PATENT COOPERATION TREATY (PCT)

(19) World Intellectual Property Organization
International Bureau

(43) International Publication Date
28 March 2002 (28.03.2002)

PCT

(10) International Publication Number
WO 02/025577 A3

(51) International Patent Classification[7]: G06K 11/14, 11/18

(21) International Application Number: PCT/US01/29693

(22) International Filing Date:
20 September 2001 (20.09.2001)

(25) Filing Language: English

(26) Publication Language: English

(30) Priority Data:
09/666,363 20 September 2000 (20.09.2000) US

(71) Applicant *(for all designated States except US)*: **INTEL CORPORATION** [US/US]; 2200 Mission College Boulevard, Santa Clara, CA 95052 (US).

(72) Inventor; and

(75) Inventor/Applicant *(for US only)*: **XU, Jianping** [CN/US]; 1529 NW Slocum Way, Portland, OR 97229 (US).

(74) Agents: **VIKSNINS, Ann, S.** et al.; Schwegman, Lundberg, Woessner, & Kluth, P.A., P.O. Box 2938, Minneapolis, MN 55402 (US).

(81) Designated States *(national)*: AE, AG, AL, AM, AT, AU, AZ, BA, BB, BG, BR, BY, BZ, CA, CH, CN, CO, CR, CU, CZ, DE, DK, DM, DZ, EC, EE, ES, FI, GB, GD, GE, GH, GM, HR, HU, ID, IL, IN, IS, JP, KE, KG, KP, KR, KZ, LC, LK, LR, LS, LT, LU, LV, MA, MD, MG, MK, MN, MW, MX, MZ, NO, NZ, PH, PL, PT, RO, RU, SD, SE, SG, SI, SK, SL, TJ, TM, TR, TT, TZ, UA, UG, US, UZ, VN, YU, ZA, ZW.

(84) Designated States *(regional)*: ARIPO patent (GH, GM, KE, LS, MW, MZ, SD, SL, SZ, TZ, UG, ZW), Eurasian patent (AM, AZ, BY, KG, KZ, MD, RU, TJ, TM), European patent (AT, BE, CH, CY, DE, DK, ES, FI, FR, GB, GR, IE, IT, LU, MC, NL, PT, SE, TR), OAPI patent (BF, BJ, CF, CG, CI, CM, GA, GN, GQ, GW, ML, MR, NE, SN, TD, TG).

Published:
— *with international search report*

[Continued on next page]

(54) Title: WIRELESS HANDWRITING SYSTEM

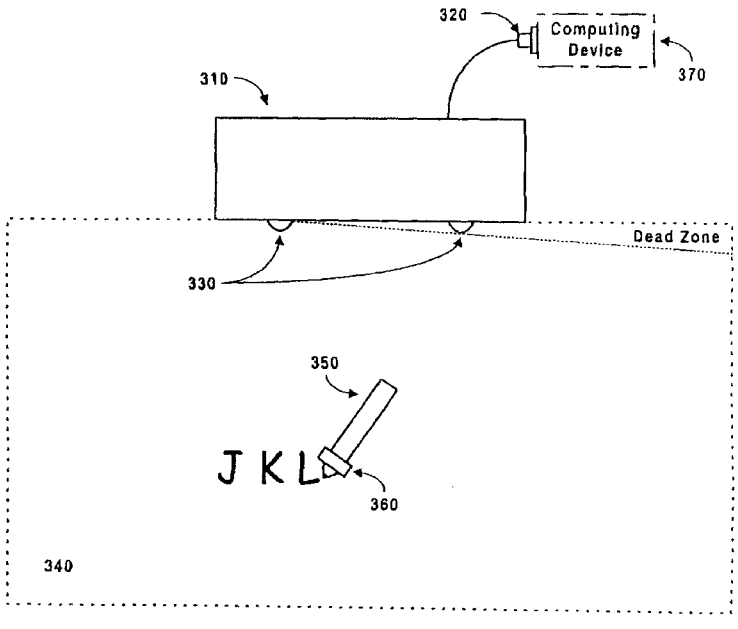

300

(57) Abstract: A system for tracking motion of a writing device in accordance with the invention includes a substantially omni-directional transmitter attached to the writing device adn a plurality of semi-cylindrical receivers capable of receiving, over a substantially planar area, one or more pulses generated by the substantially omni-directional transmitter.

WO 02/025577 A3

(88) Date of publication of the international search report:
13 March 2003

For two-letter codes and other abbreviations, refer to the "Guidance Notes on Codes and Abbreviations" appearing at the beginning of each regular issue of the PCT Gazette.