Fig.1

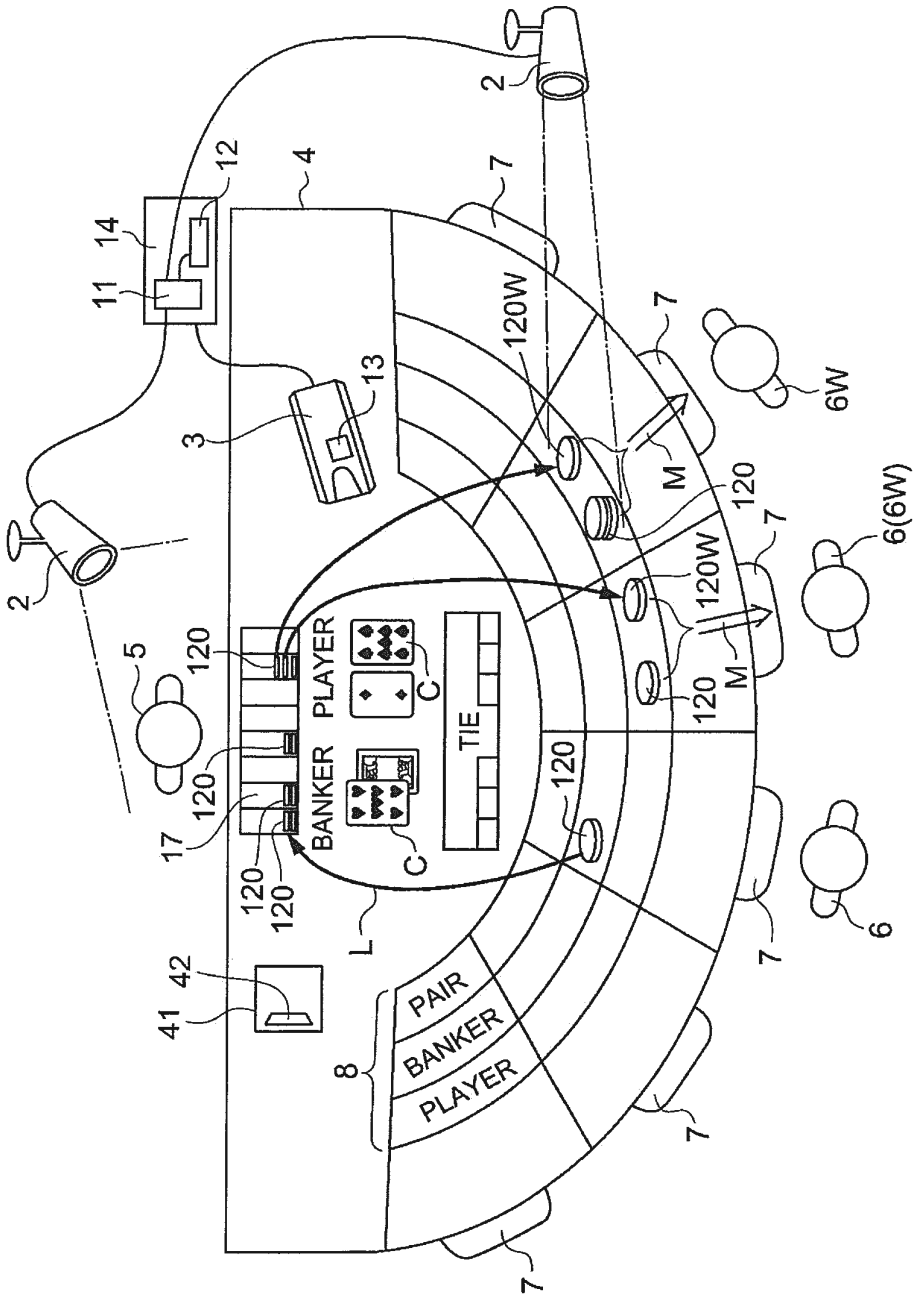
2
2
4
7
12
14
11
13
3
120W
7
6W
M
120
7
6(6W)
120W
M
120
5
120
PLAYER
C
TIE
120
BANKER
C
120
17
120
120
L
7
6
42
41
8
PAIR
BANKER
PLAYER
7
7

Fig.2A

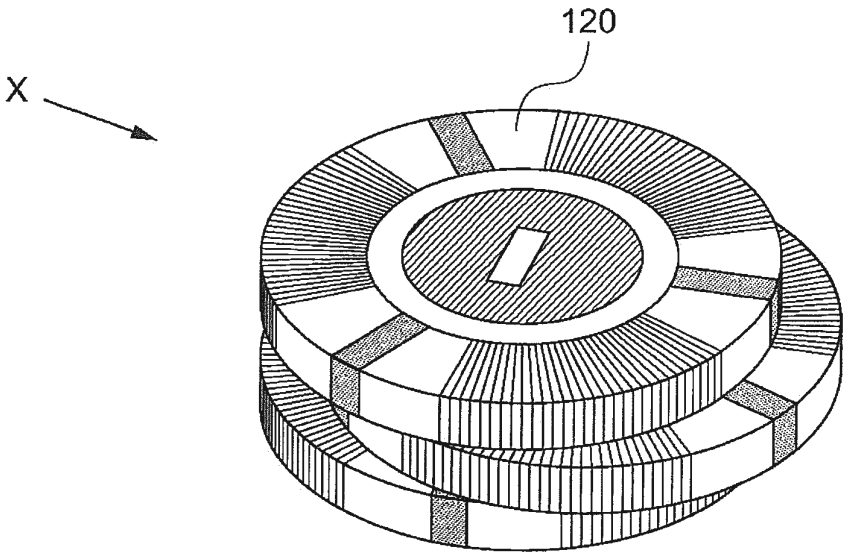

Fig.2B

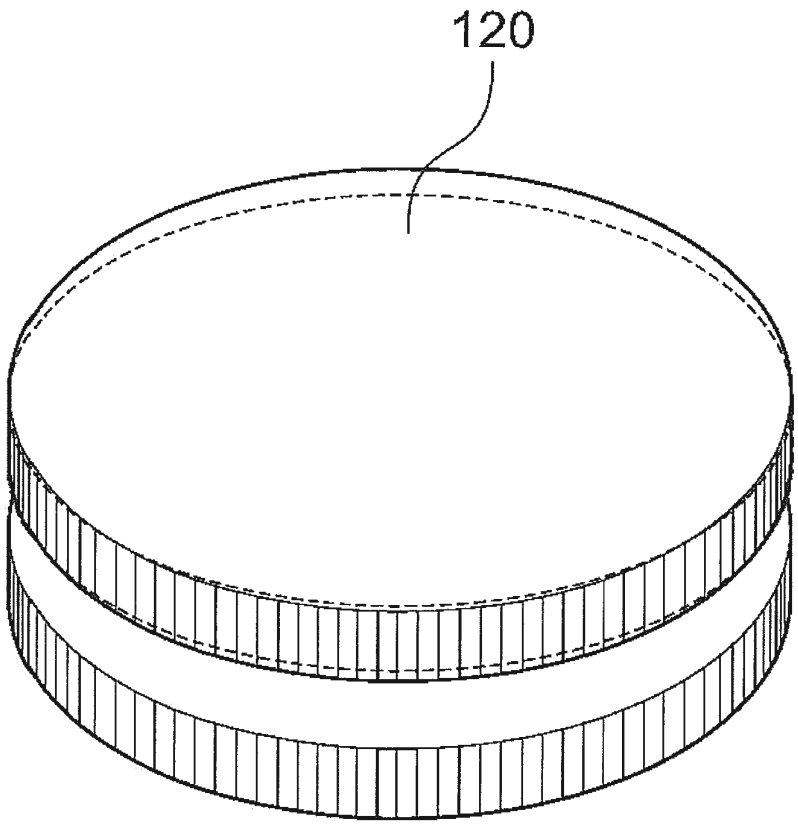

Fig.3



Fig.4A

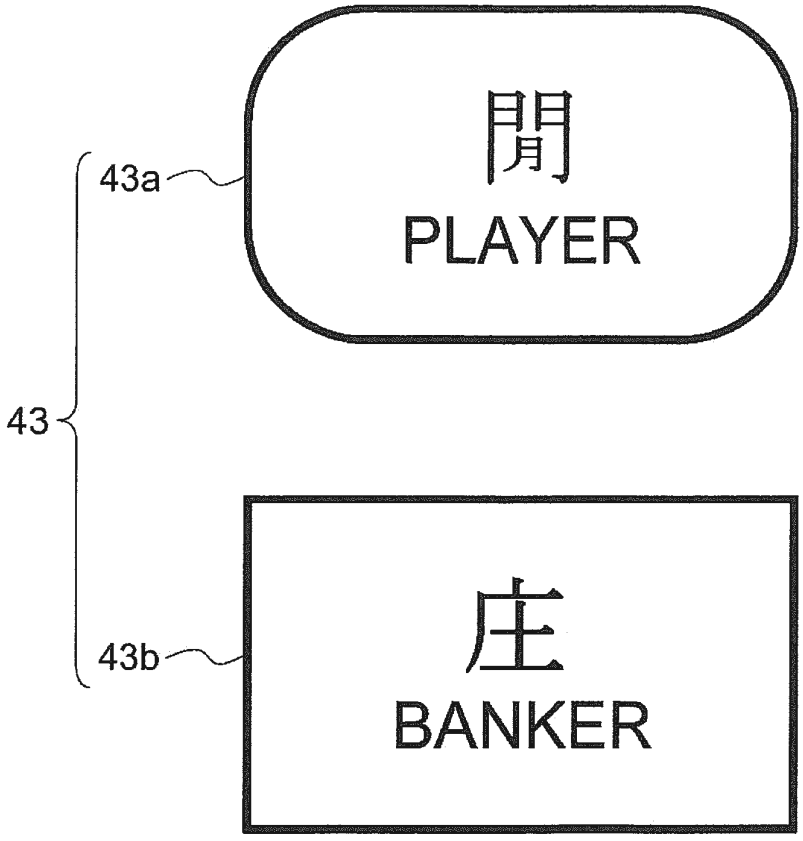

Fig.4B

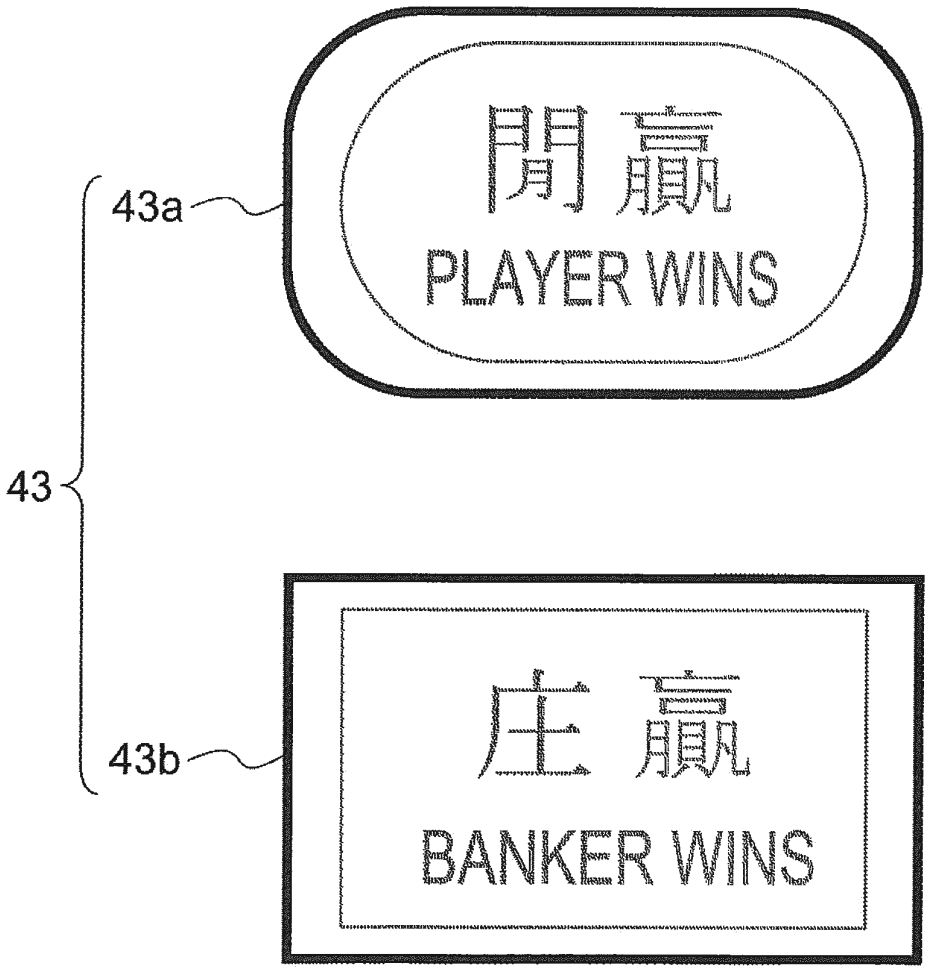

Fig.5

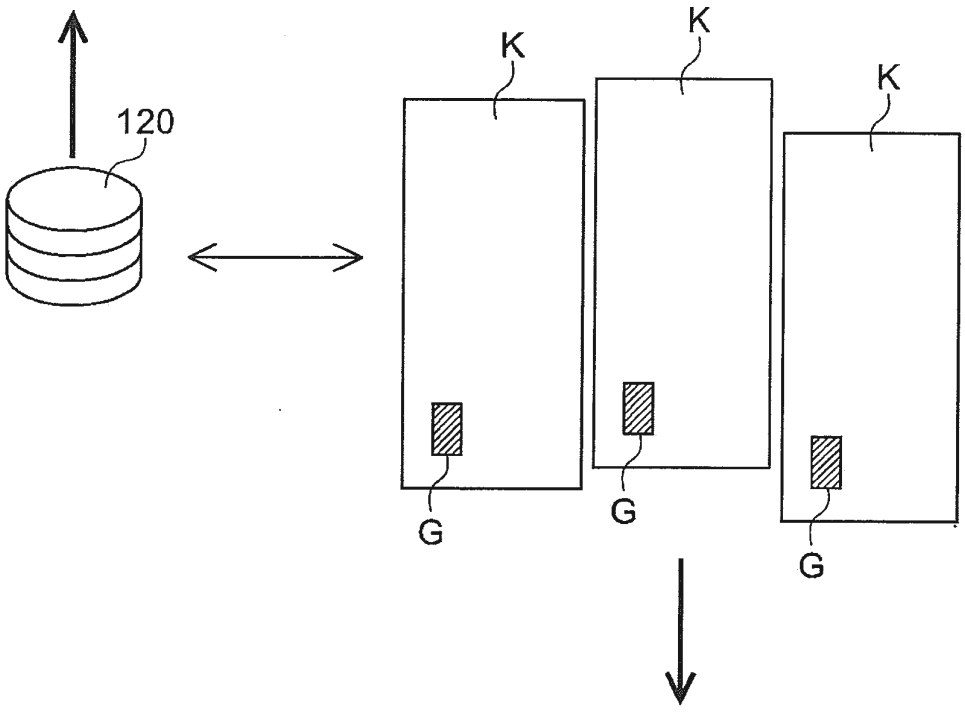

Fig.6

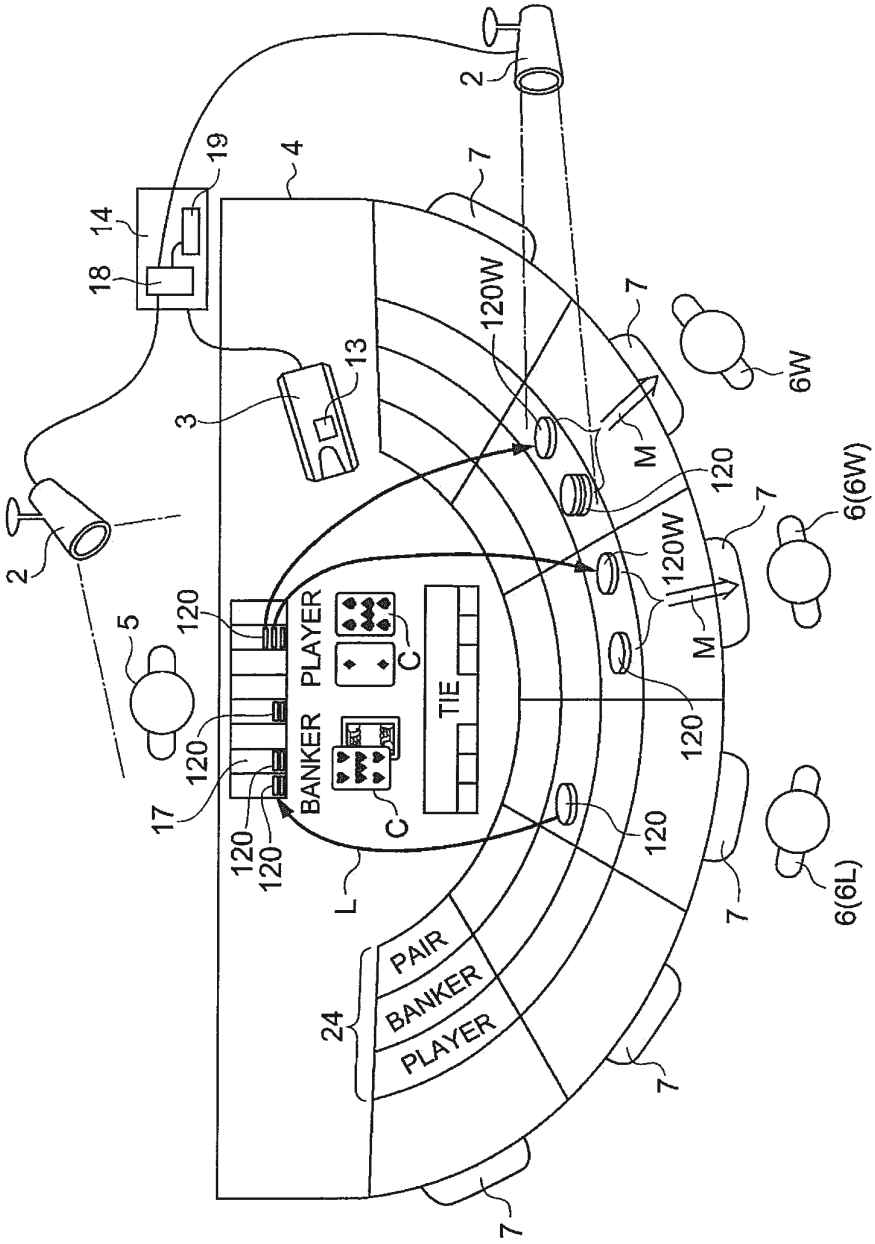
2
19
14
18
4
7
120W
13
3
6W
M
120
6(6W)
5
PLAYER
C
TIE
BANKER
17
L
6(6L)
PAIR
BANKER
PLAYER
24

Fig.7

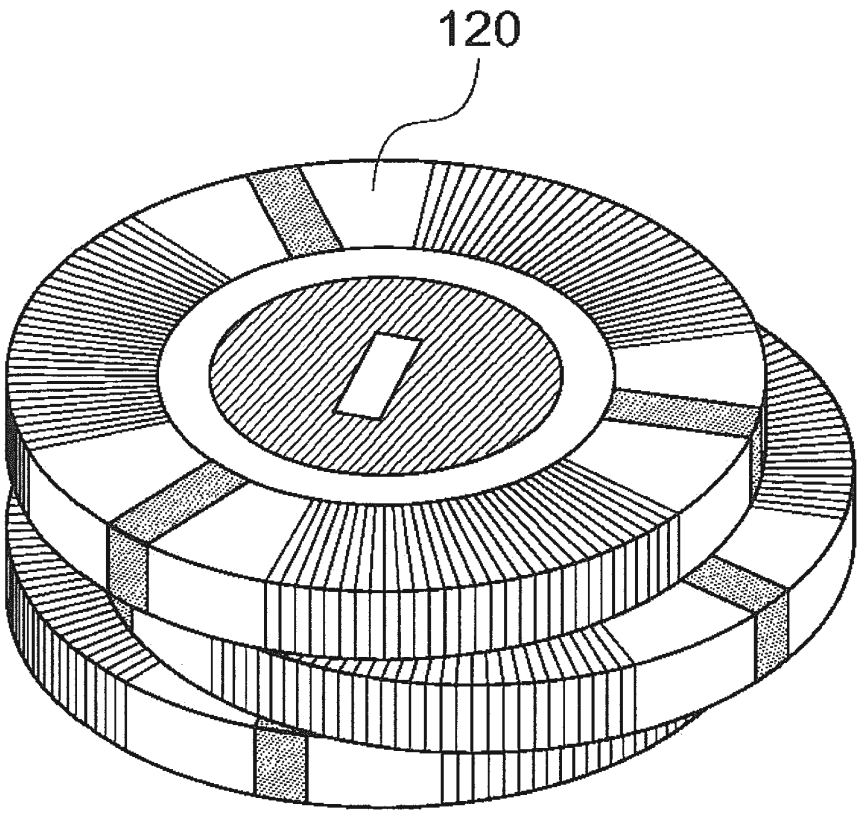

Fig.8

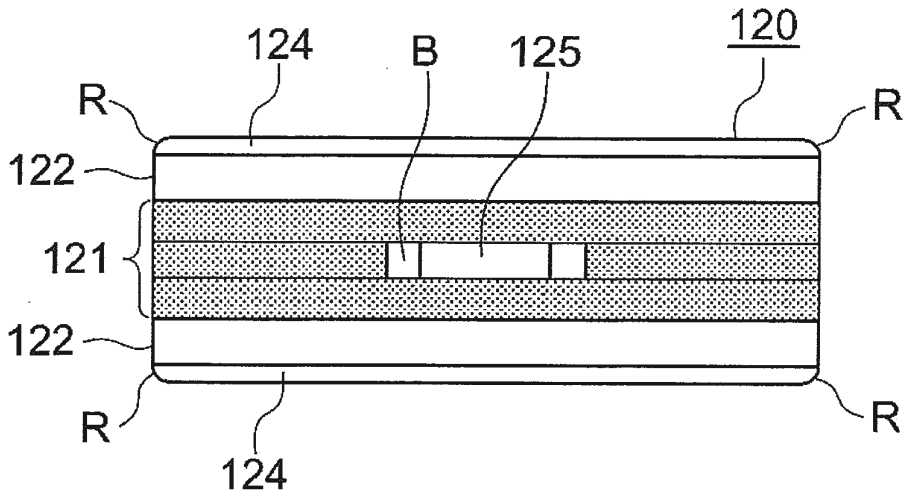

Fig.9A

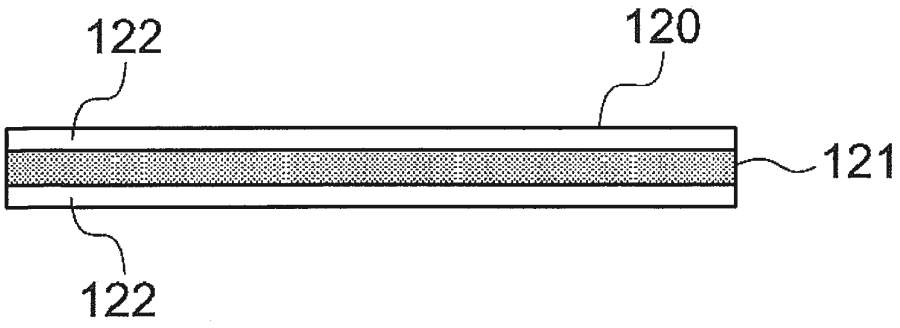

Fig.9B

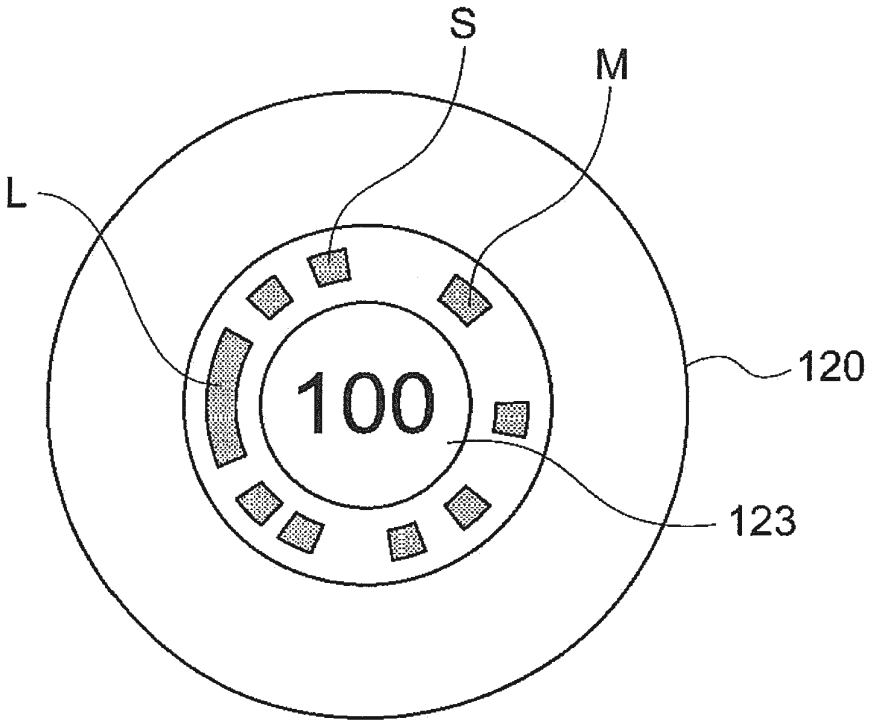

Fig.10A

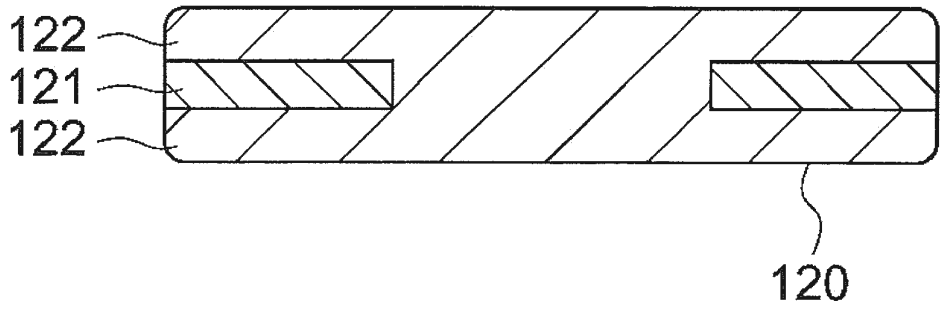

Fig.10B

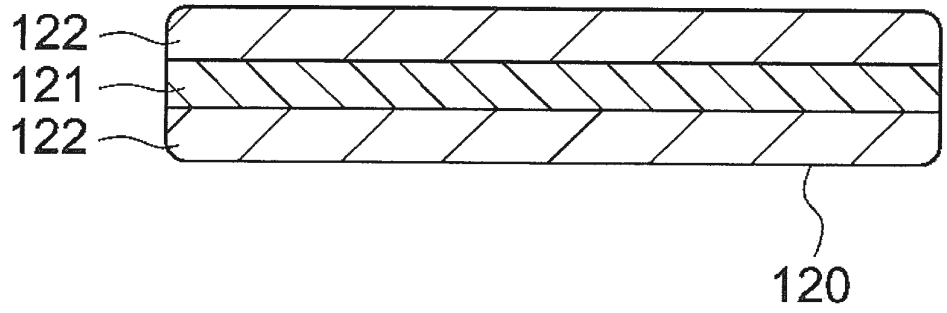

Fig.11

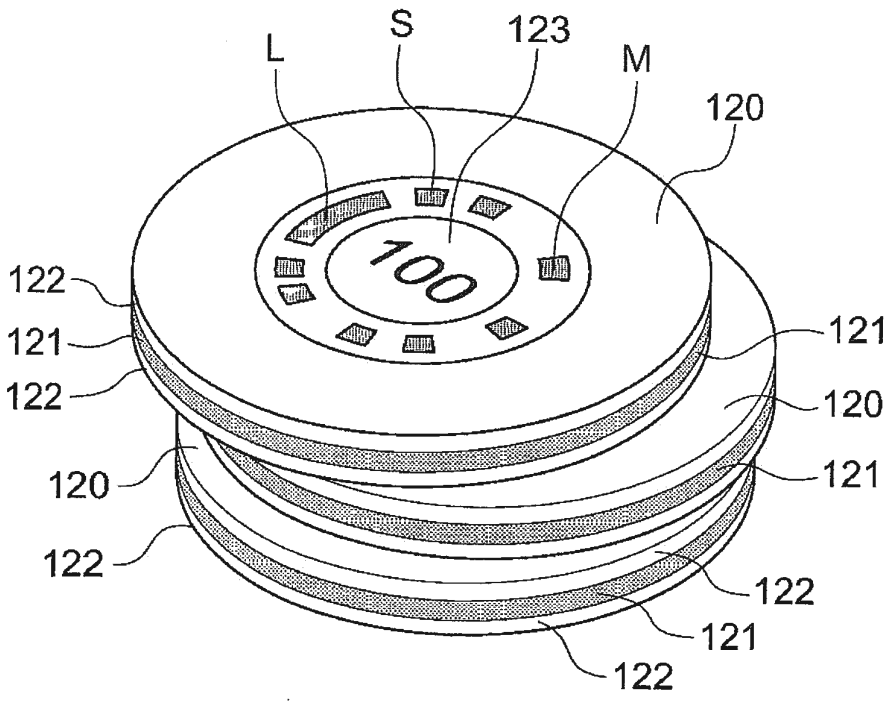

Fig.12

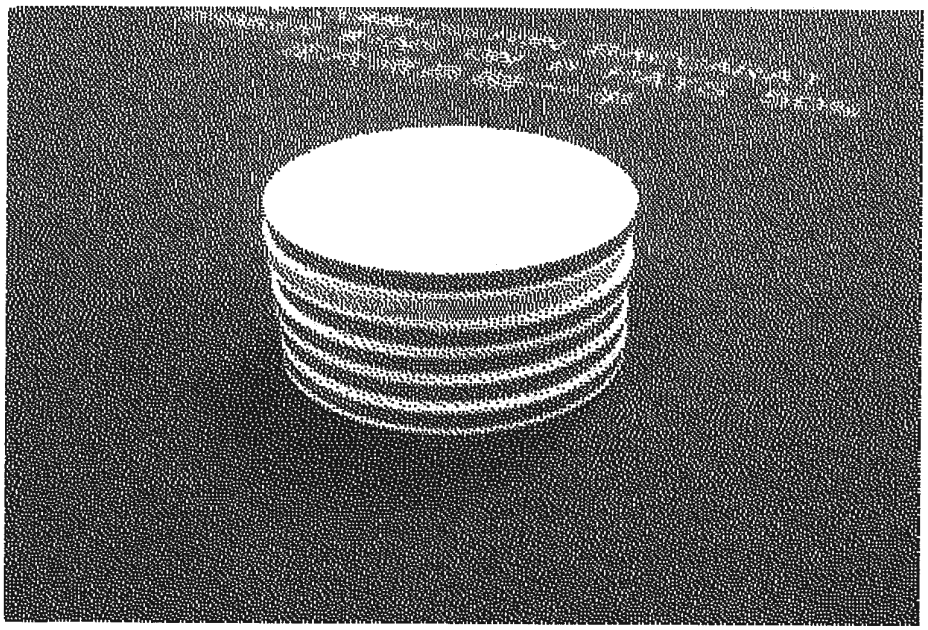

Fig.13A

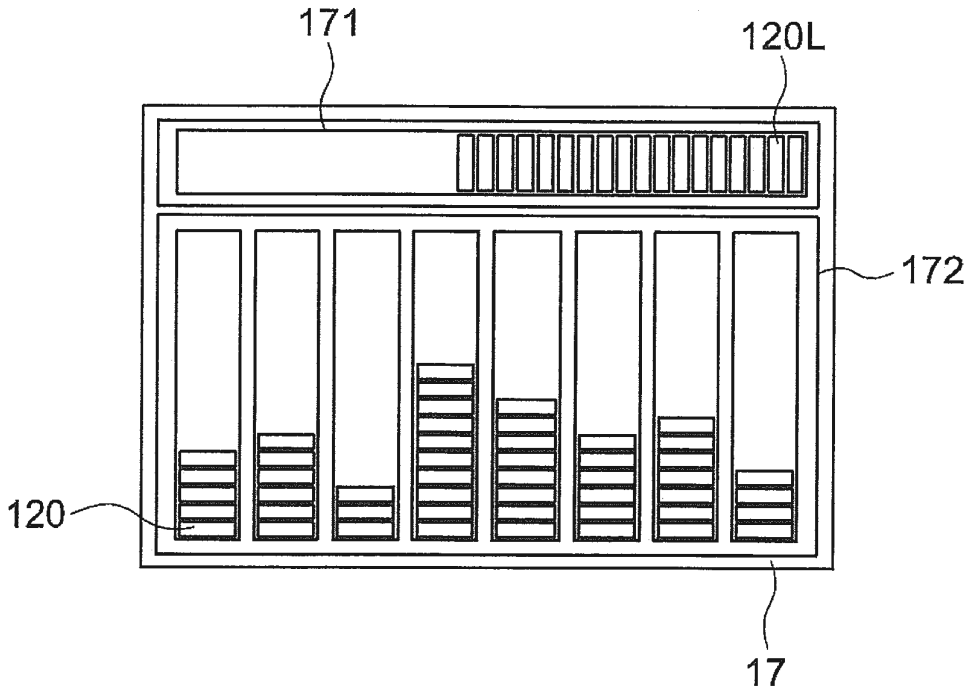

Fig.13B

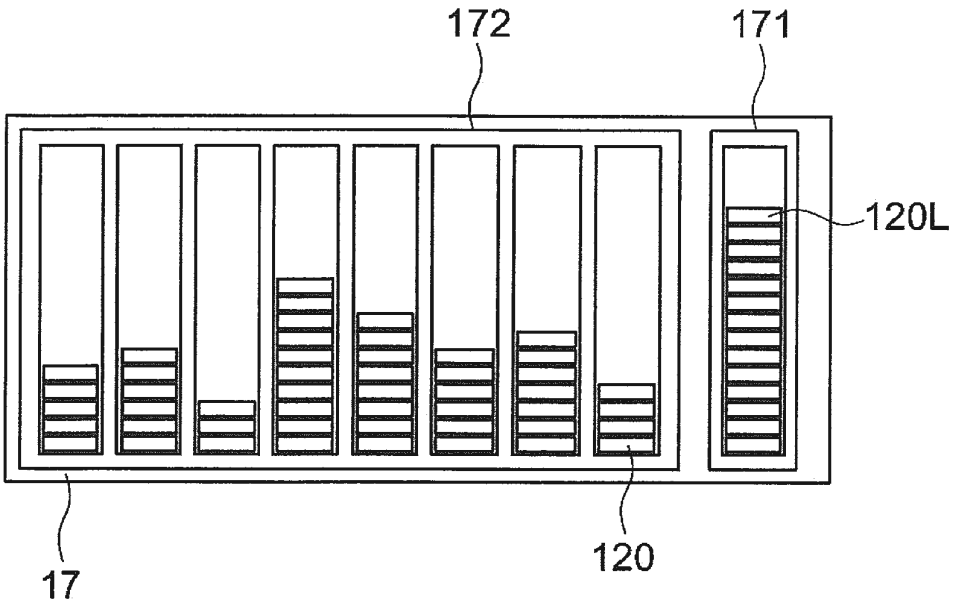

Fig.14A

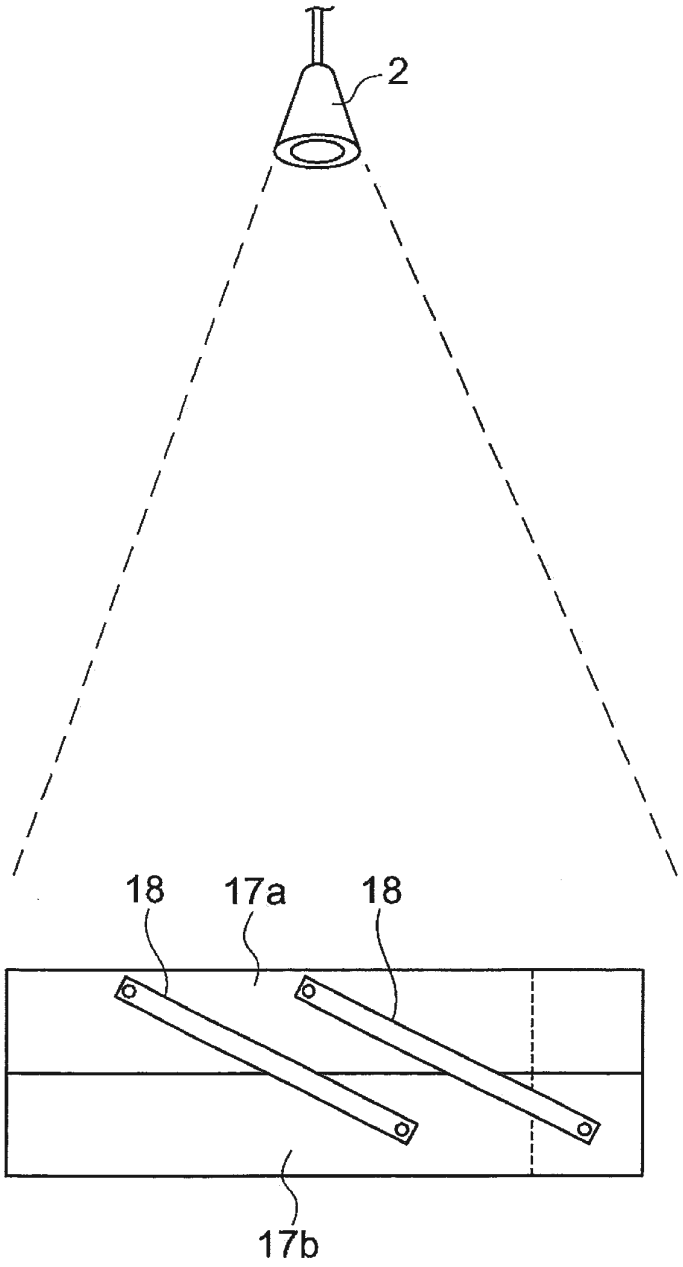

Fig.14B

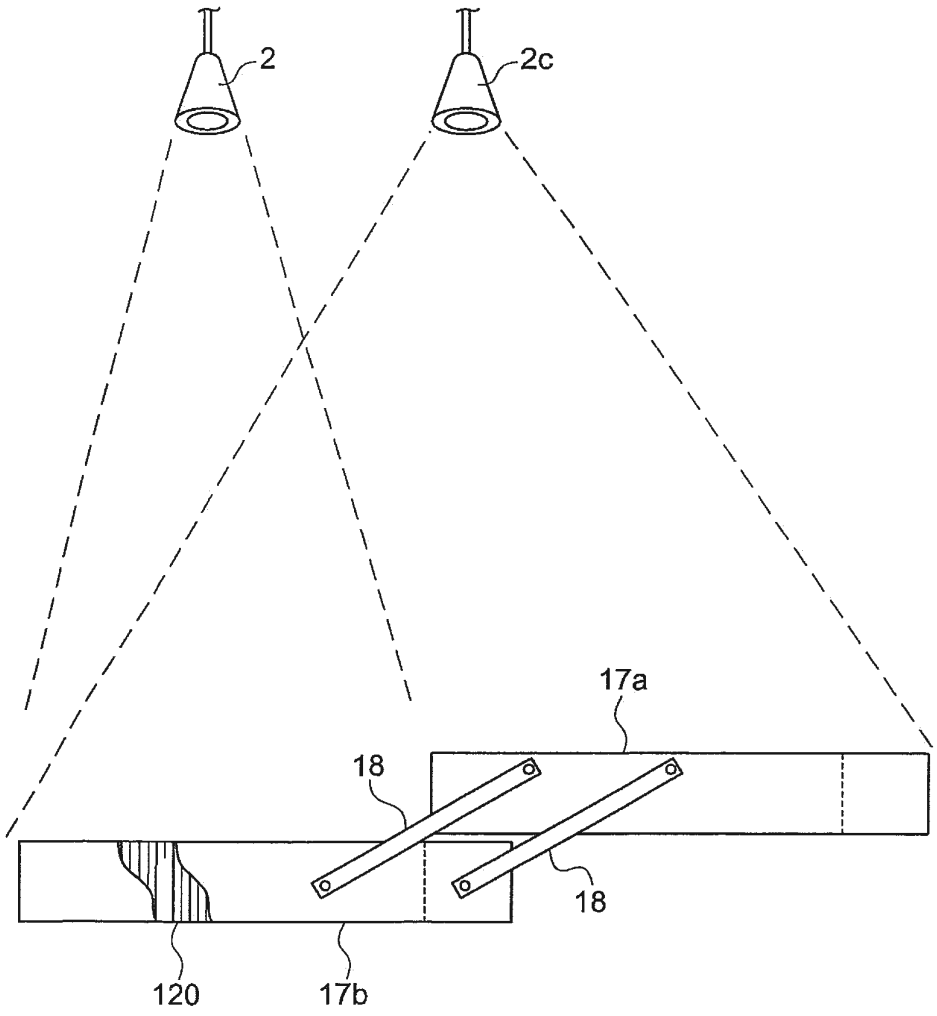

Fig.15

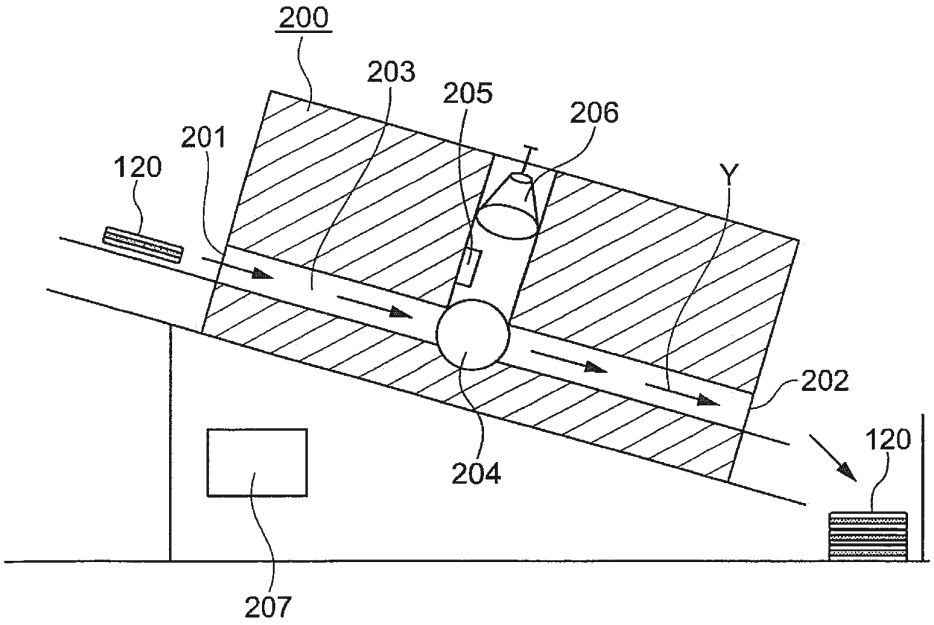

Fig.16

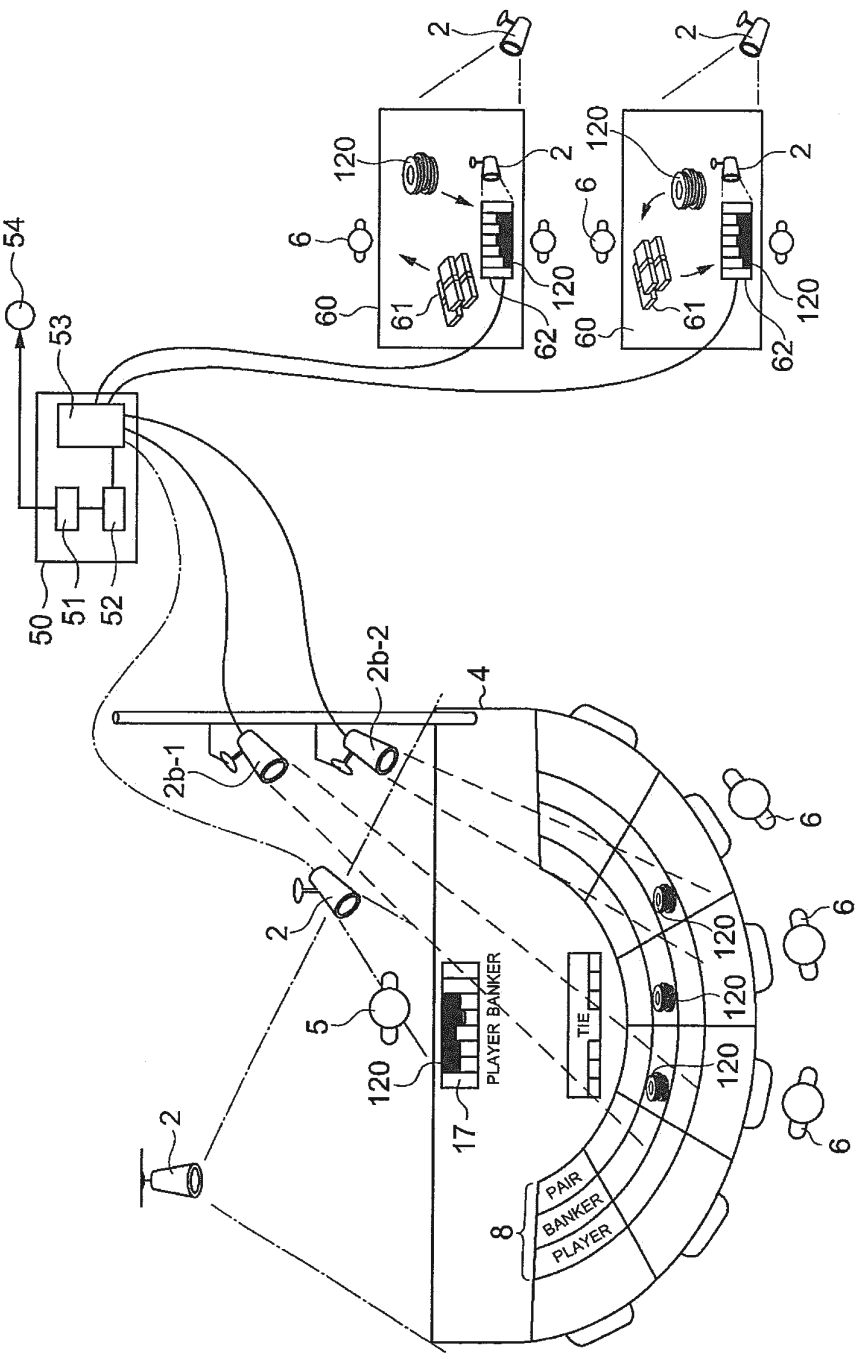
54
53
50
51
52
2
120
6
60
61
62
2b-1
2b-2
4
5
17
PLAYER
BANKER
TIE
8
PAIR
BANKER
PLAYER

Fig.17

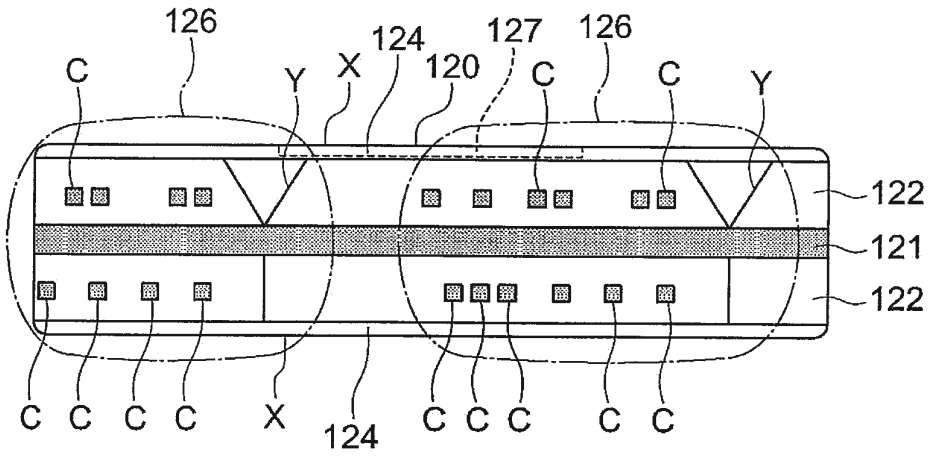

Fig.18

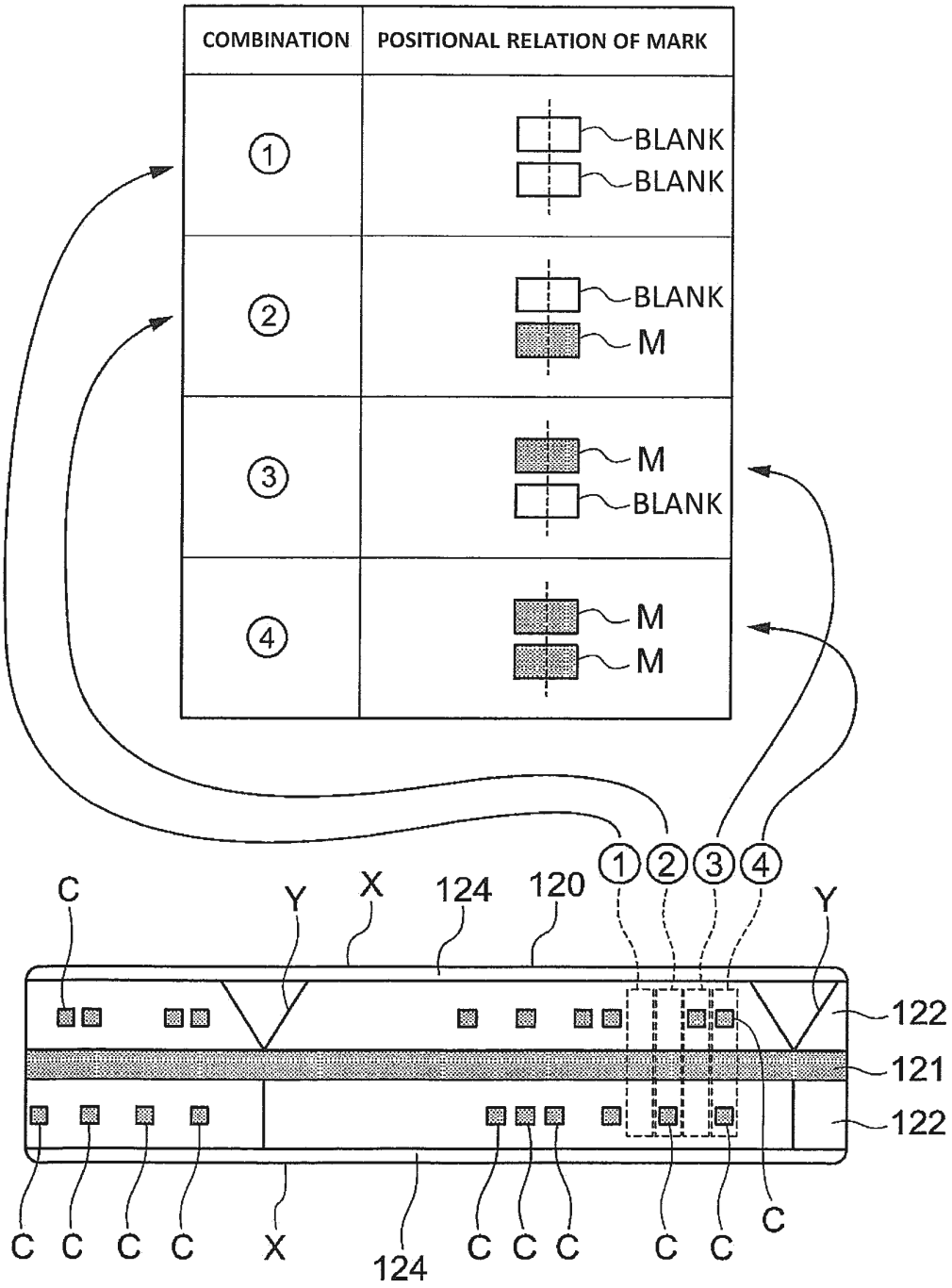
COMBINATION
POSITIONAL RELATION OF MARK
①
②
③
④
BLANK
BLANK
BLANK
M
M
BLANK
M
M
1 2 3 4
C
Y
X
124
120
Y
122
121
122
C C C C X 124 C C C C C C

Fig.19

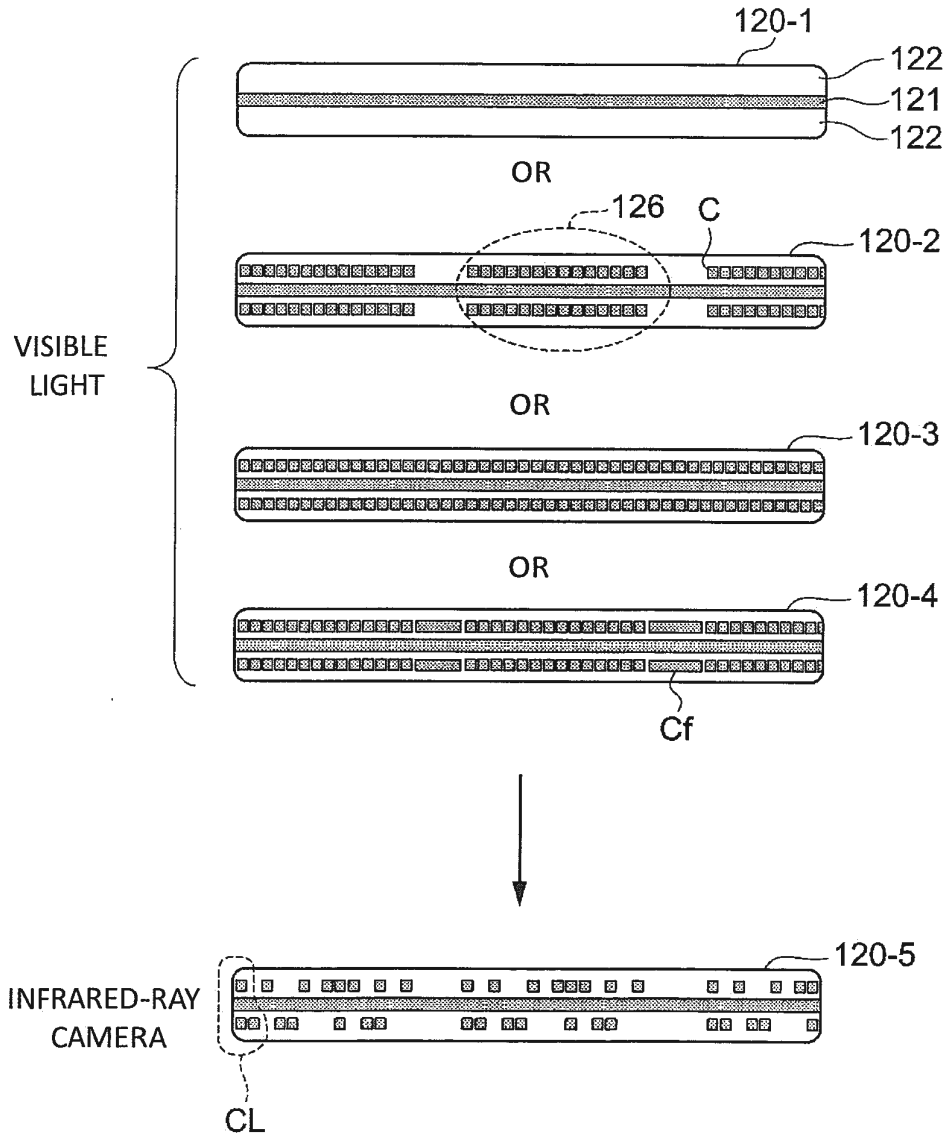
120-1
122
121
122
OR
126
C
120-2
VISIBLE LIGHT
OR
120-3
OR
120-4
Cf
120-5
INFRARED-RAY CAMERA
CL

Fig.20A

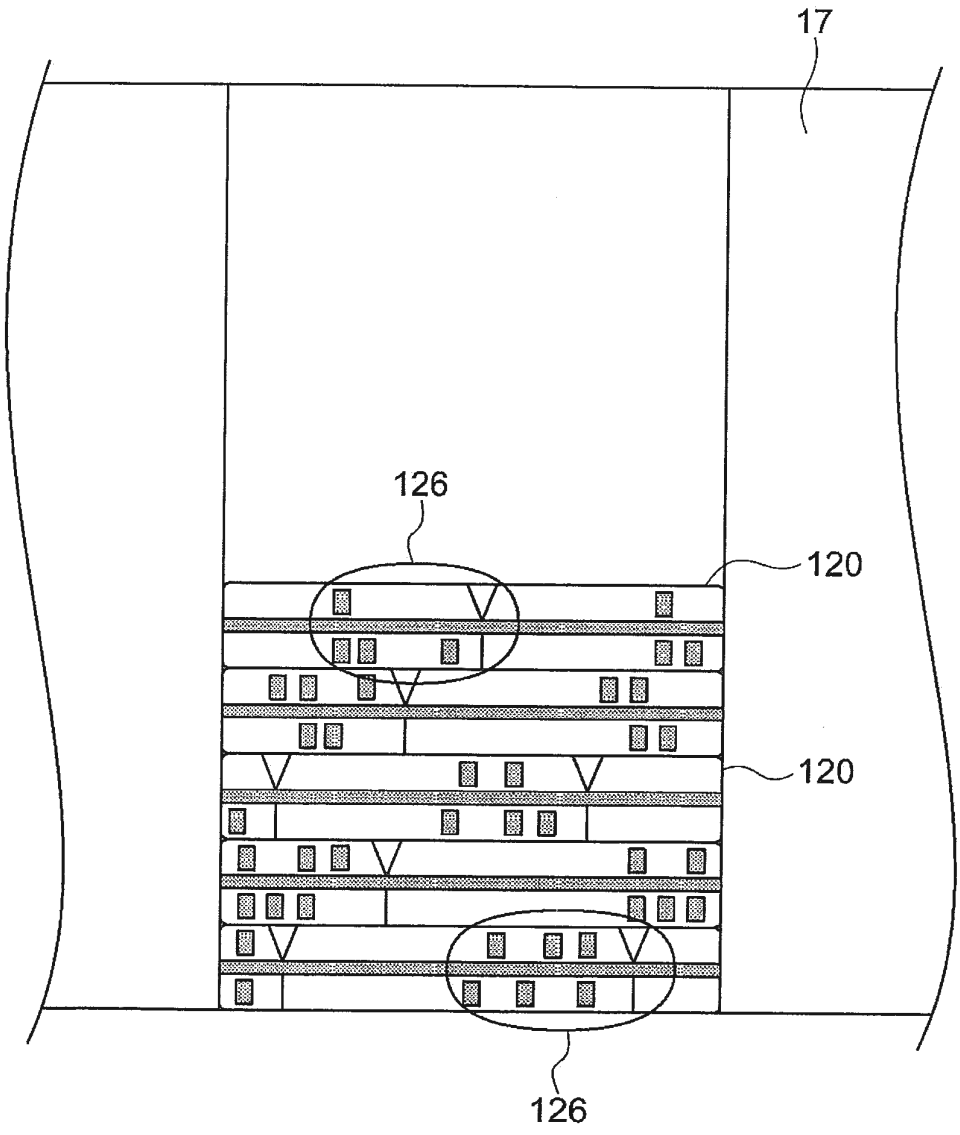

Fig.20B

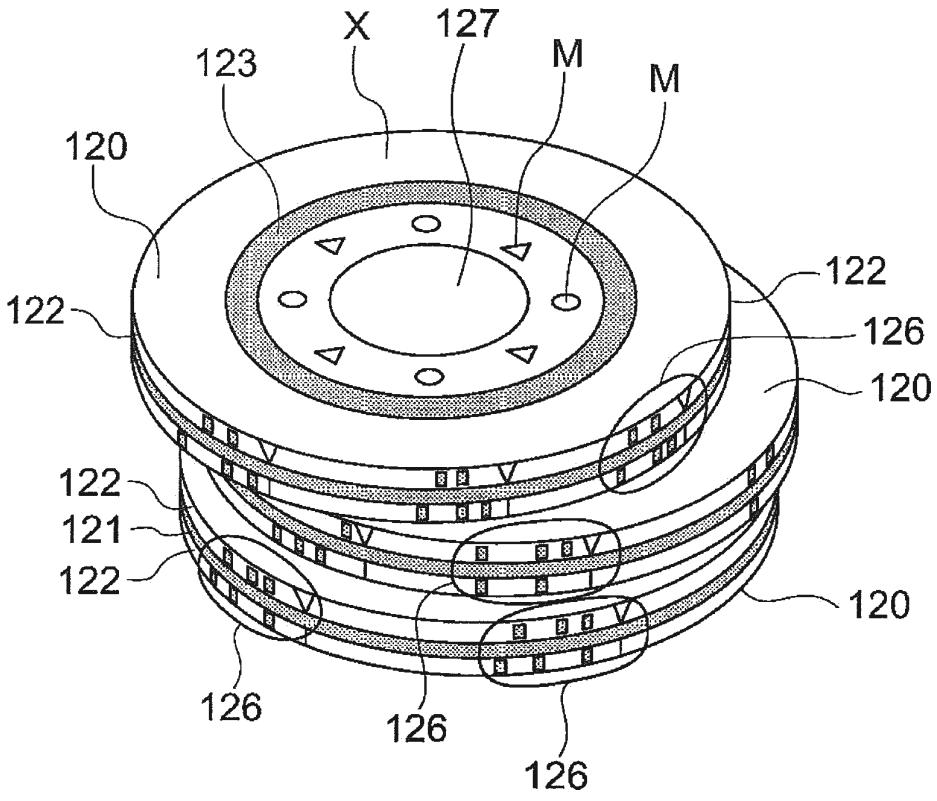

Fig.21

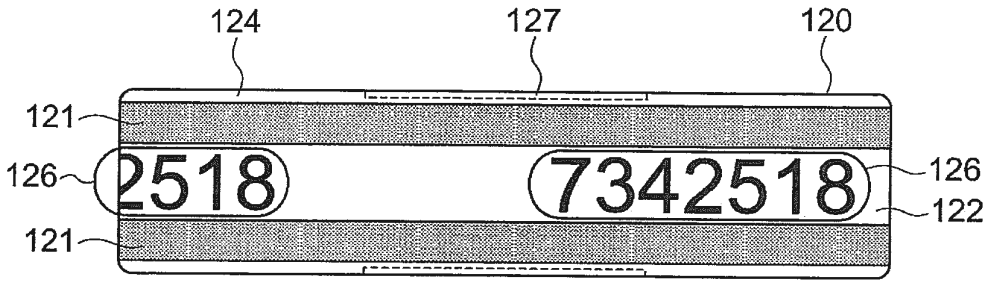

Fig.22

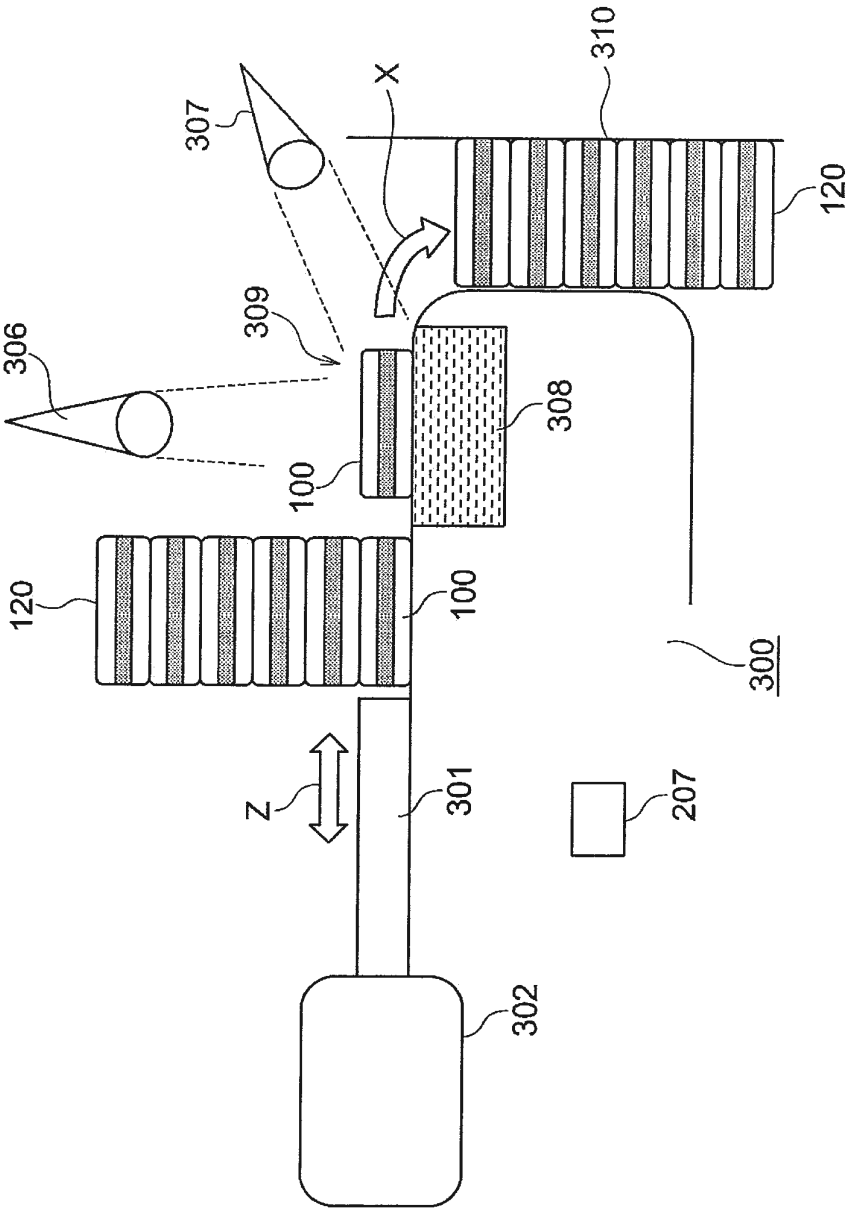

Fig.23

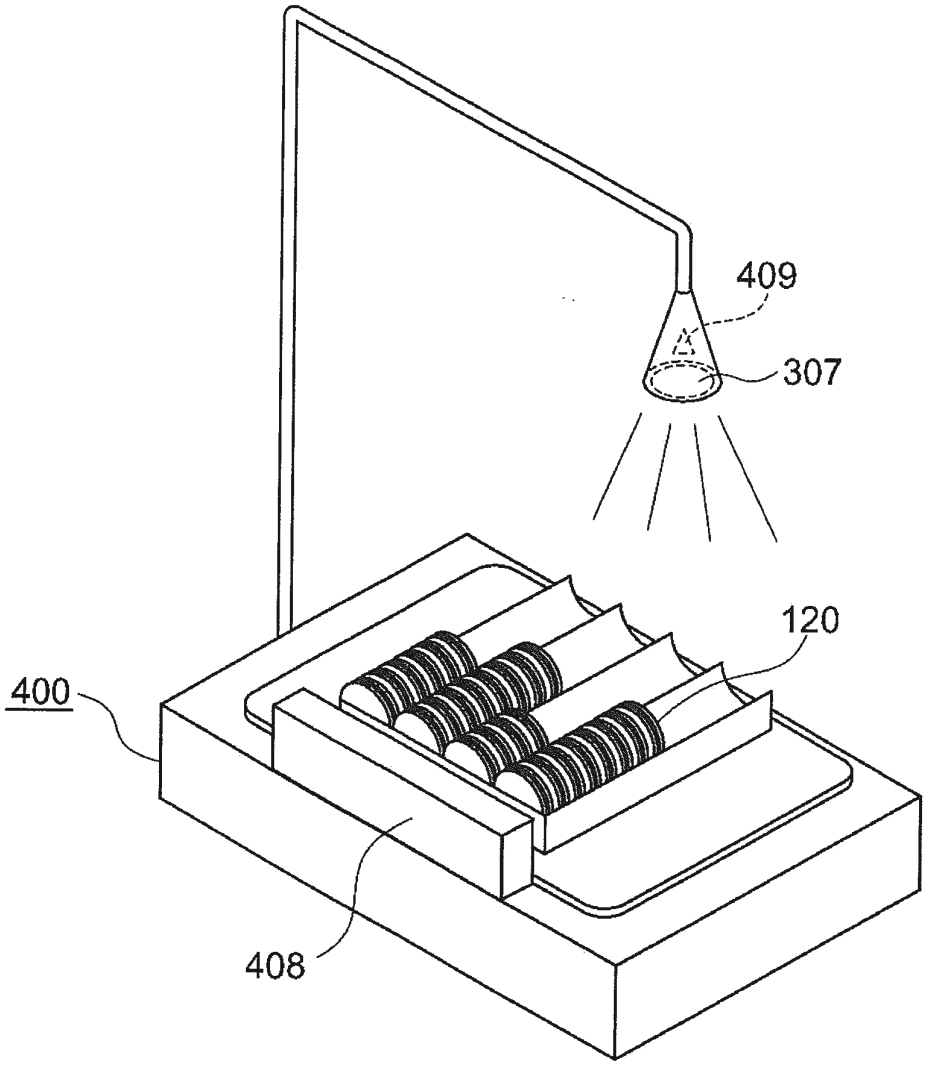

Fig.24

