DRAWING

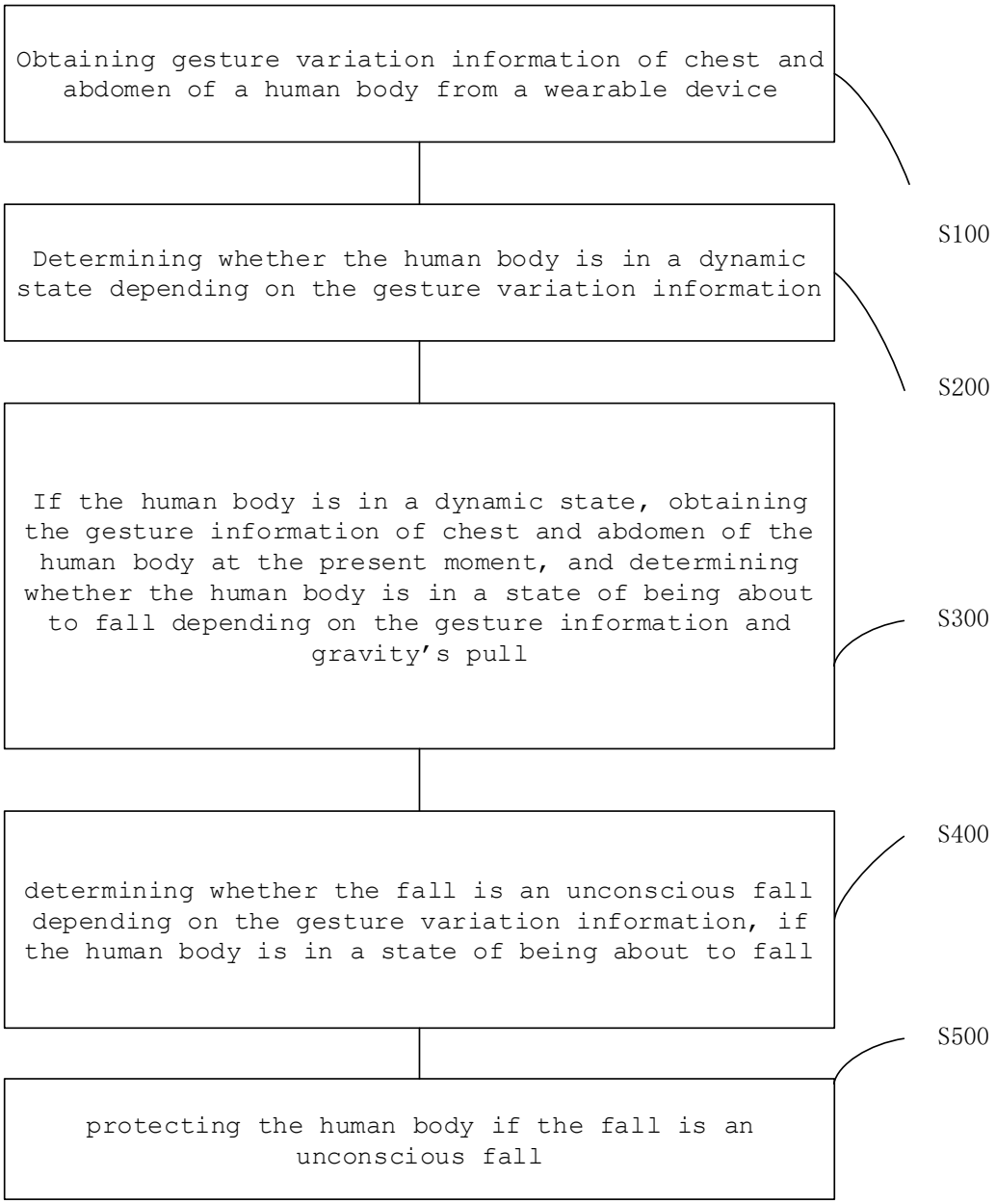

FIG 1

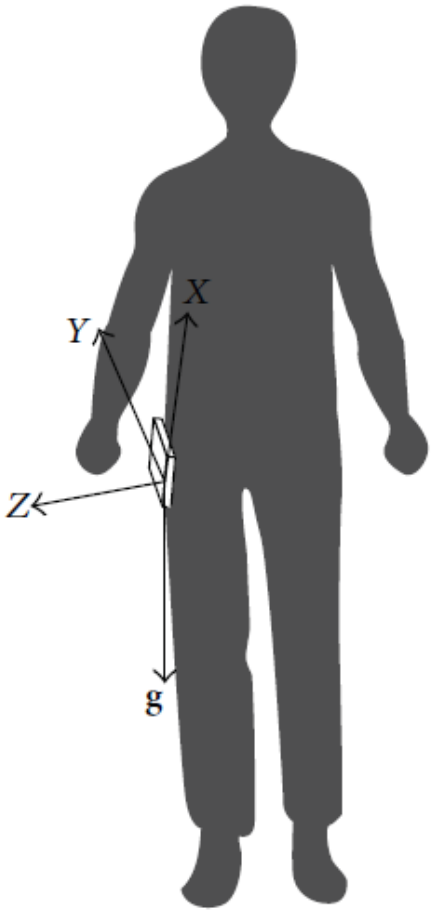

FIG 2

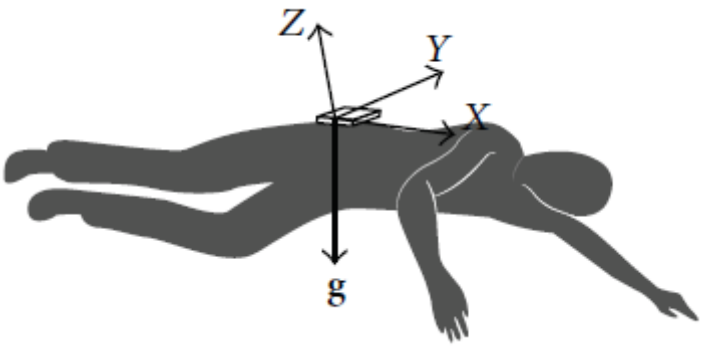

FIG 3

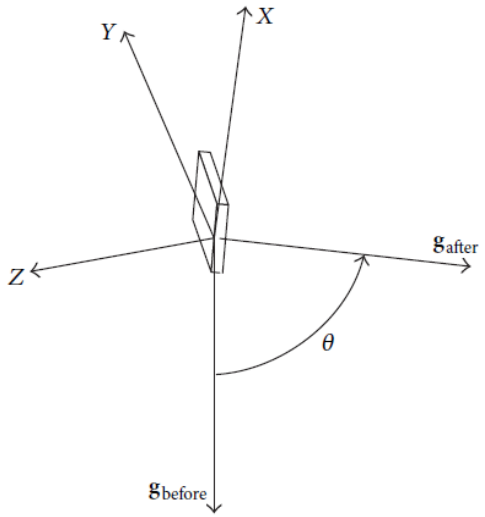
Y
X
Z
g_{after}
θ
g_{before}

FIG 4

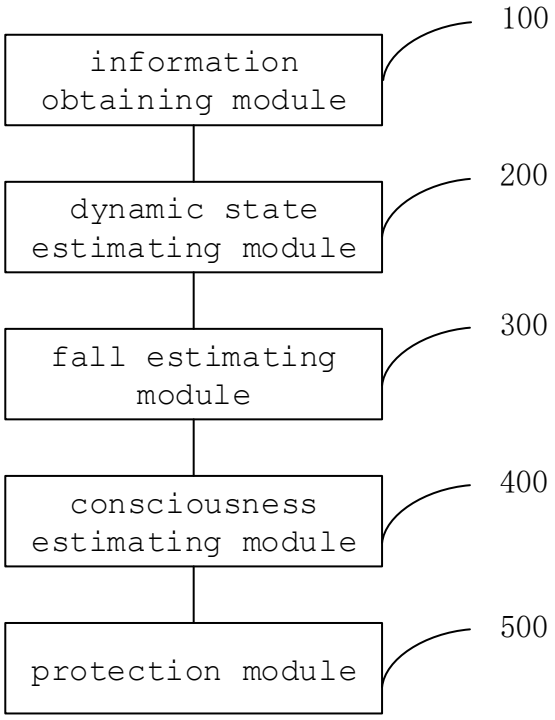
information obtaining module
100
dynamic state estimating module
200
fall estimating module
300
consciousness estimating module
400
protection module
500

FIG 5

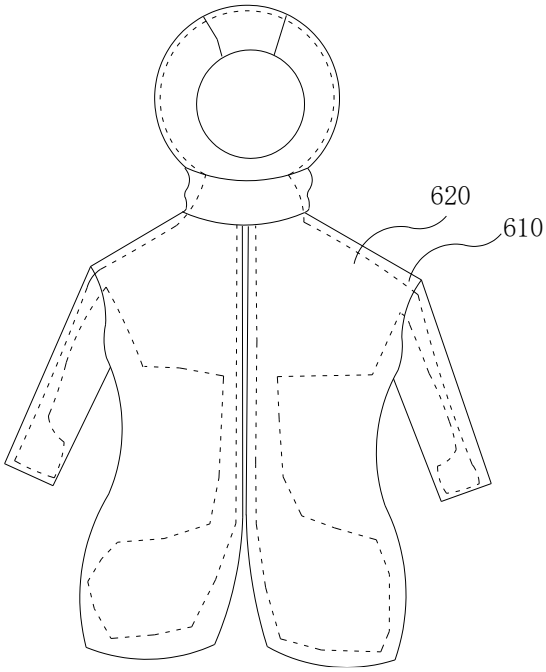

FIG 6

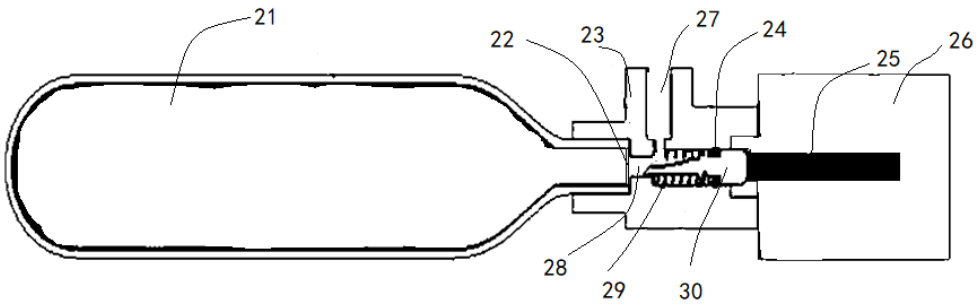

FIG 7

FIG 8A

FIG 8B

FIG 8C

FIG 8D

FIG 8E

FIG 8F

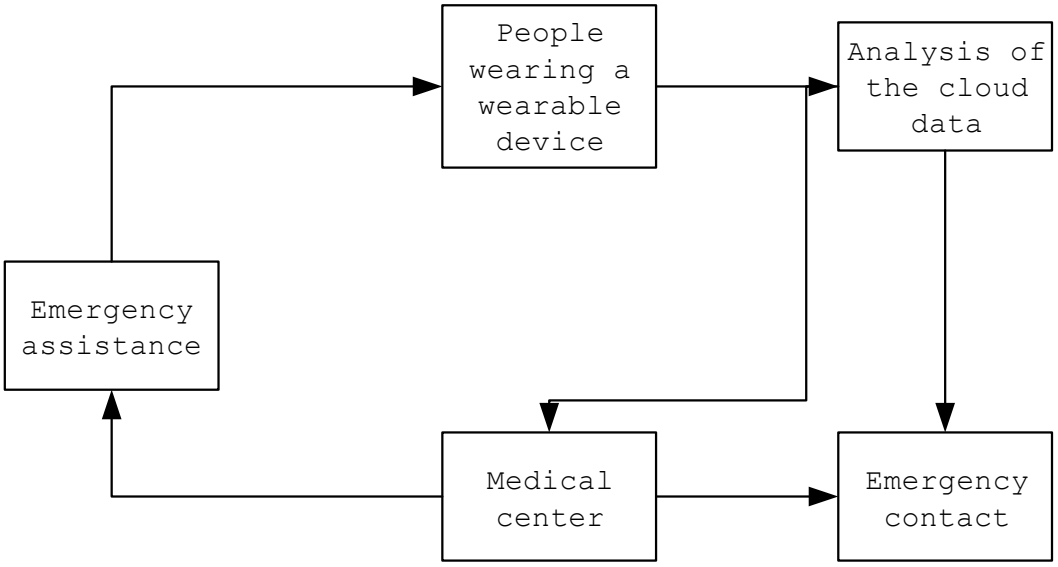
People wearing a wearable device
Analysis of the cloud data
Emergency assistance
Medical center
Emergency contact

FIG 9

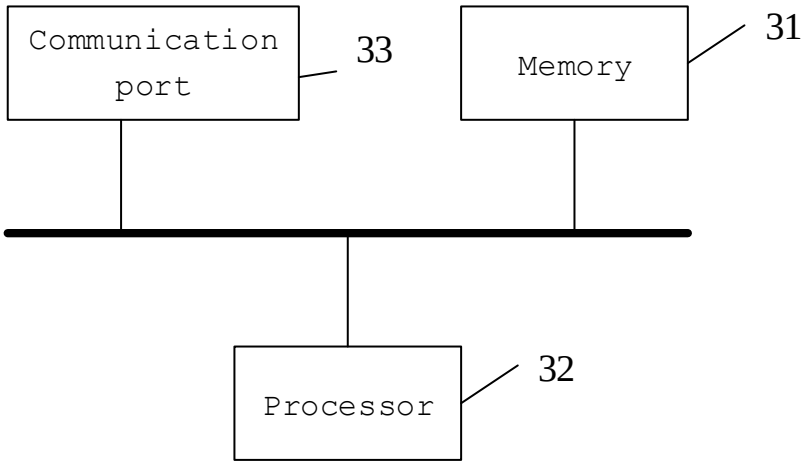
Communication port
33
Memory
31
Processor
32

FIG 10