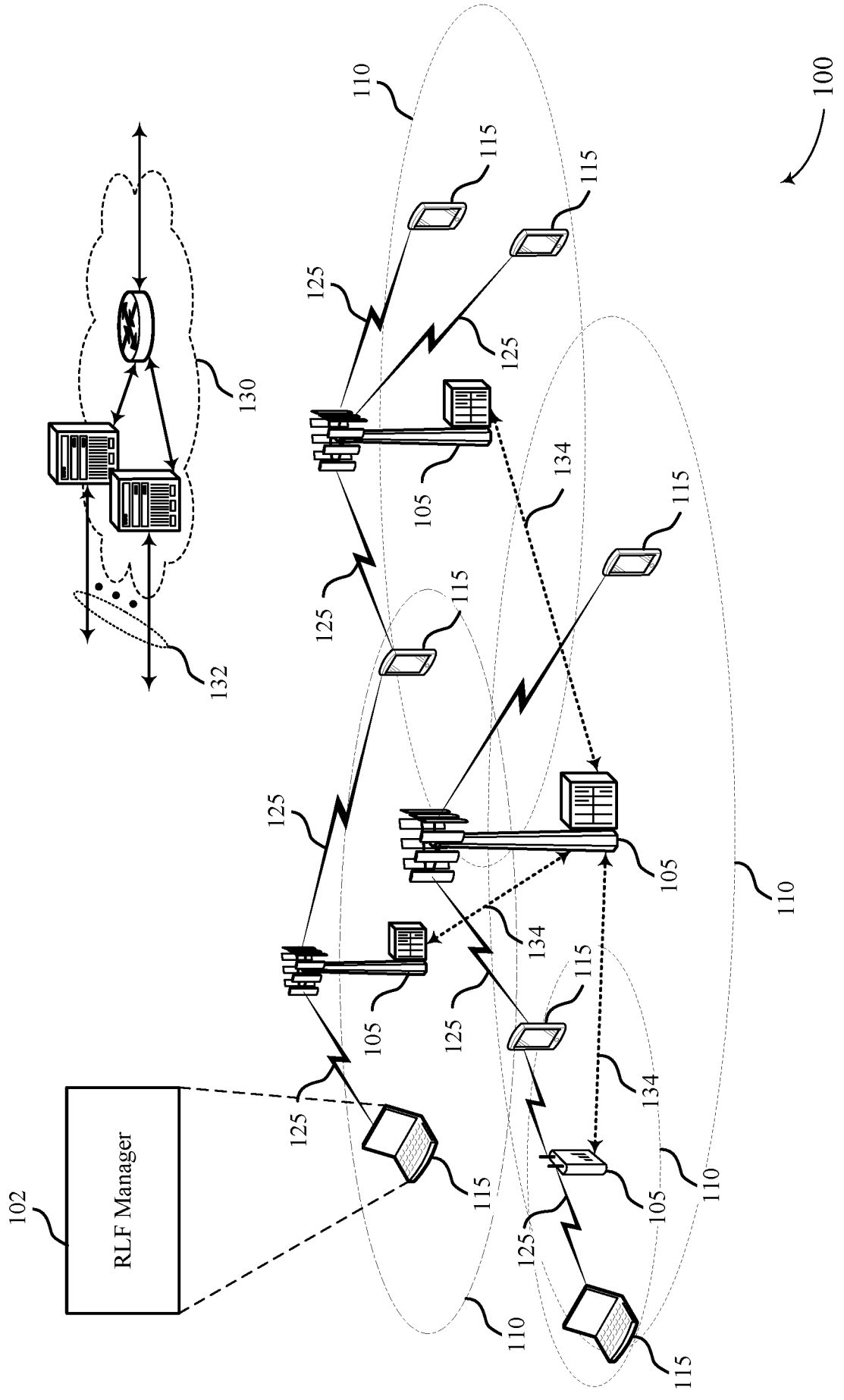


FIG. 1

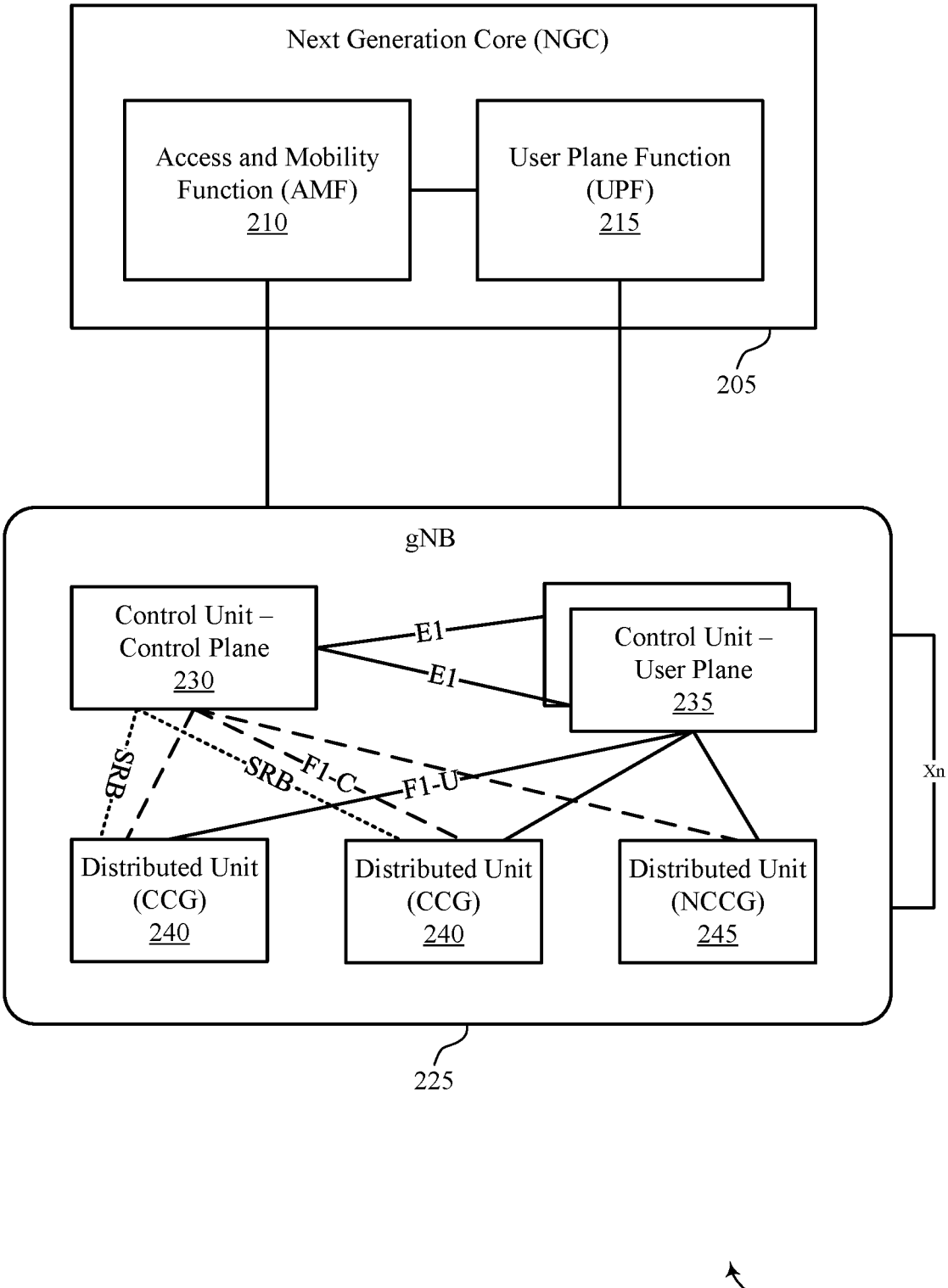
Next Generation Core (NGC)
Access and Mobility Function (AMF) 210
User Plane Function (UPF) 215
205
gNB
Control Unit – Control Plane 230
E1
E1
Control Unit – User Plane 235
SRB
SRB
F1-C
F1-U
Xn
Distributed Unit (CCG) 240
Distributed Unit (CCG) 240
Distributed Unit (NCCG) 245
225
200

FIG. 2

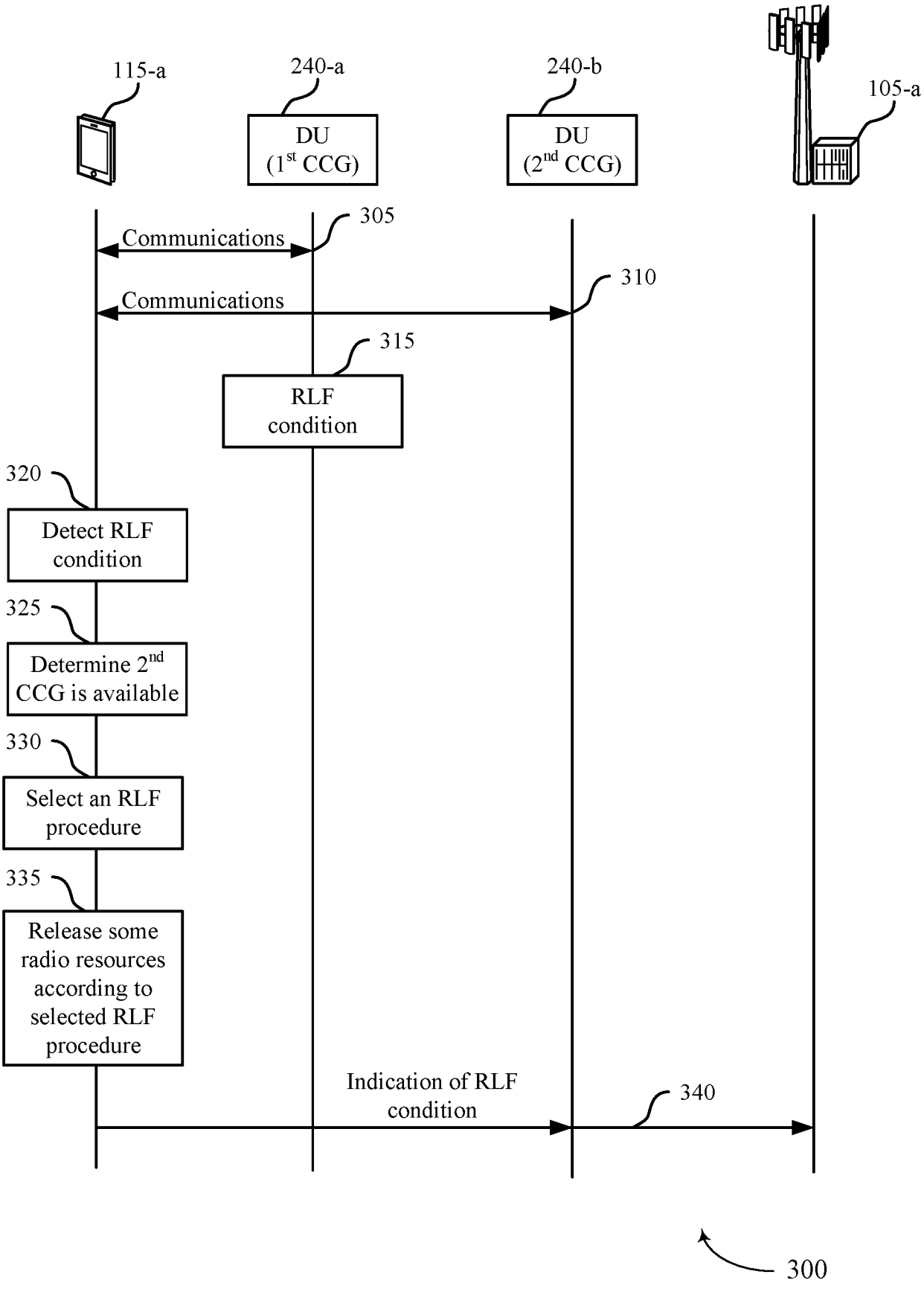
115-a
240-a
DU
(1st CCG)
240-b
DU
(2nd CCG)
105-a
305
Communications
310
Communications
315
RLF
condition
320
Detect RLF
condition
325
Determine 2nd
CCG is available
330
Select an RLF
procedure
335
Release some
radio resources
according to
selected RLF
procedure
Indication of RLF
condition
340
300

FIG. 3

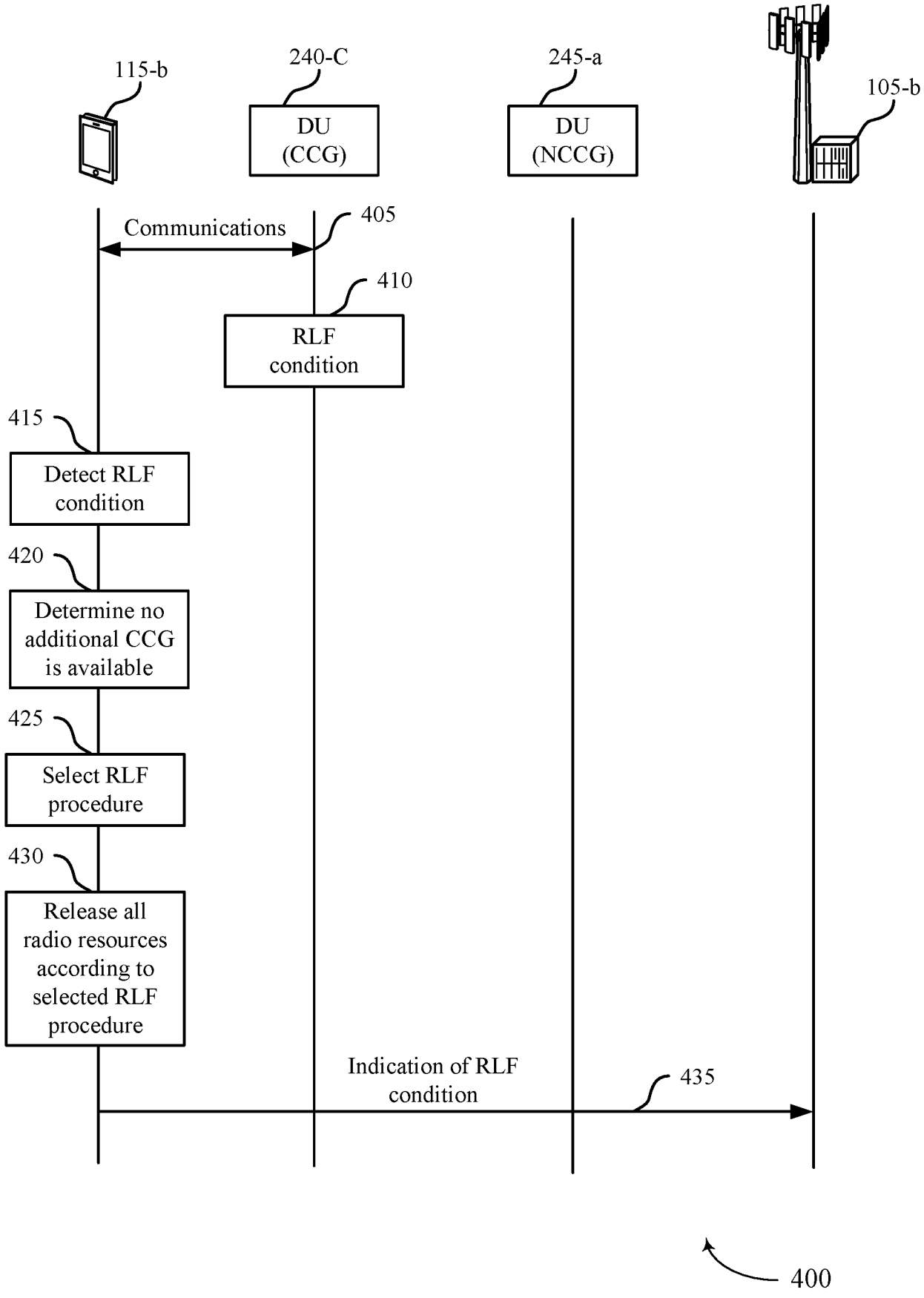
115-b
240-C
DU (CCG)
245-a
DU (NCCG)
105-b
Communications
405
410
RLF condition
415
Detect RLF condition
420
Determine no additional CCG is available
425
Select RLF procedure
430
Release all radio resources according to selected RLF procedure
Indication of RLF condition
435
400

FIG. 4

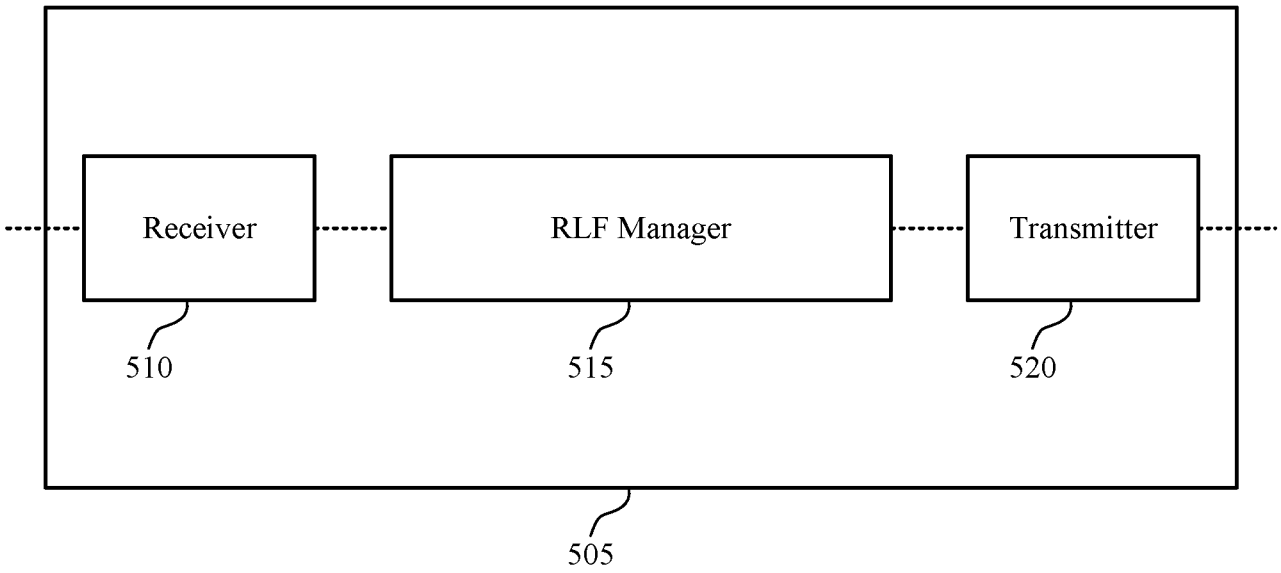


FIG. 5

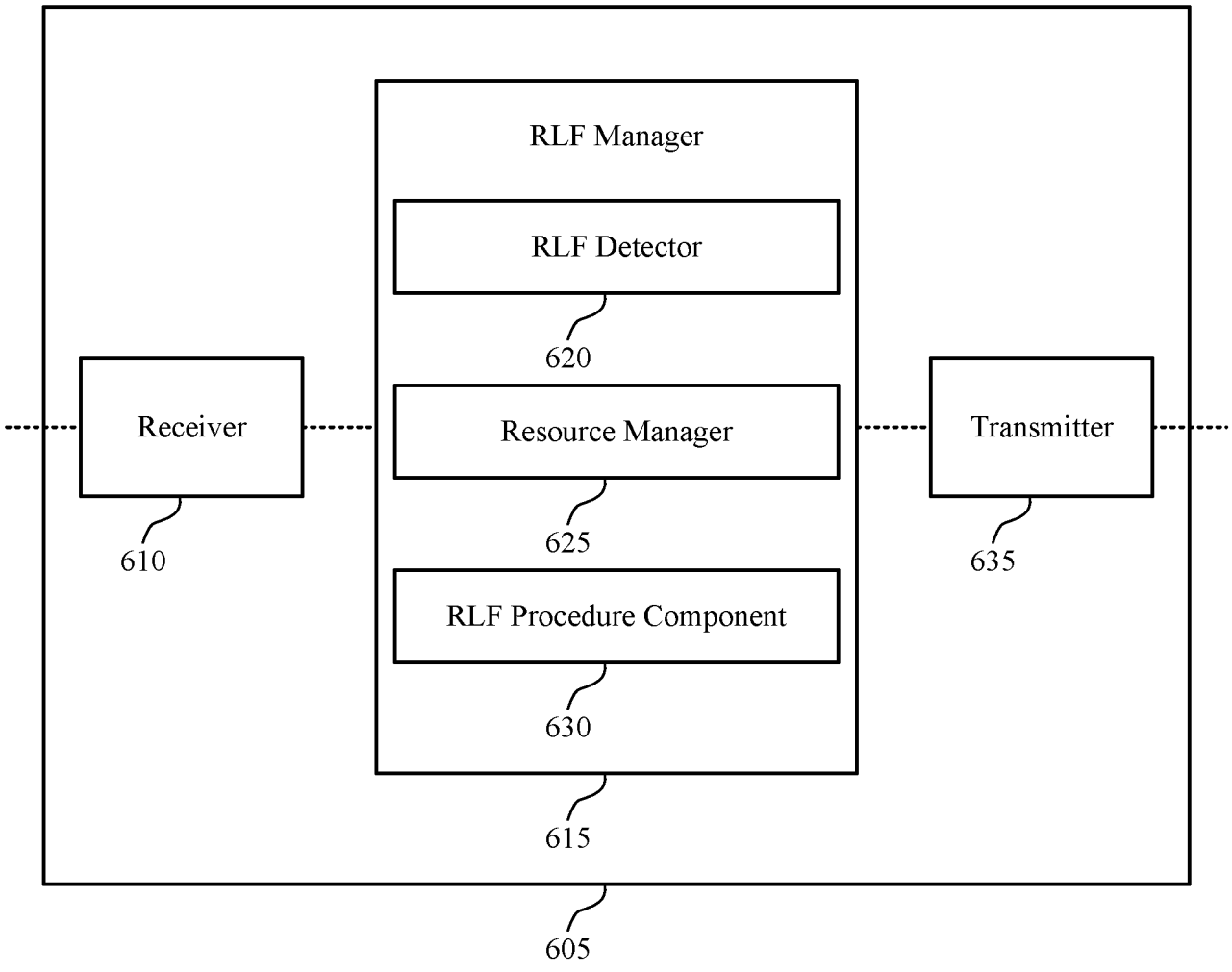
RLF Manager
RLF Detector
620
Receiver
Resource Manager
Transmitter
610
625
635
RLF Procedure Component
630
615
605
600

FIG. 6

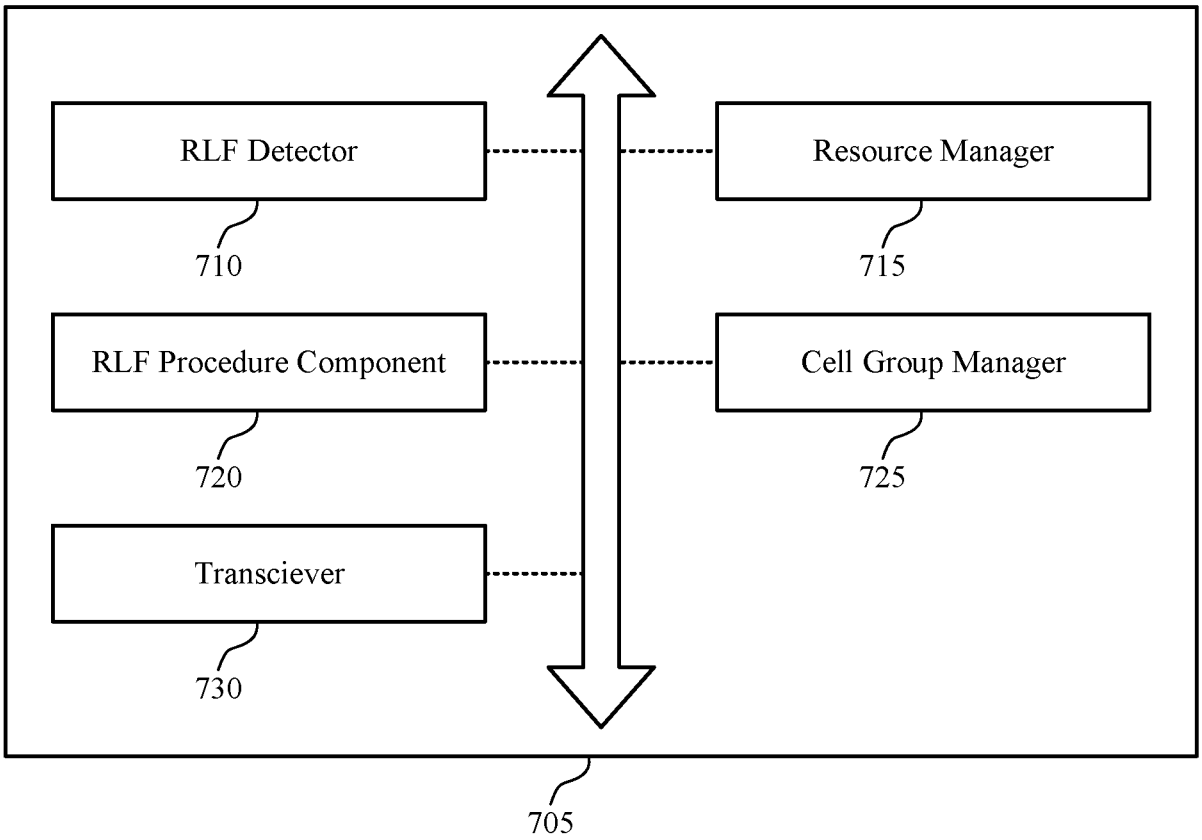
RLF Detector
710
Resource Manager
715
RLF Procedure Component
720
Cell Group Manager
725
Transciever
730
705
700

FIG. 7

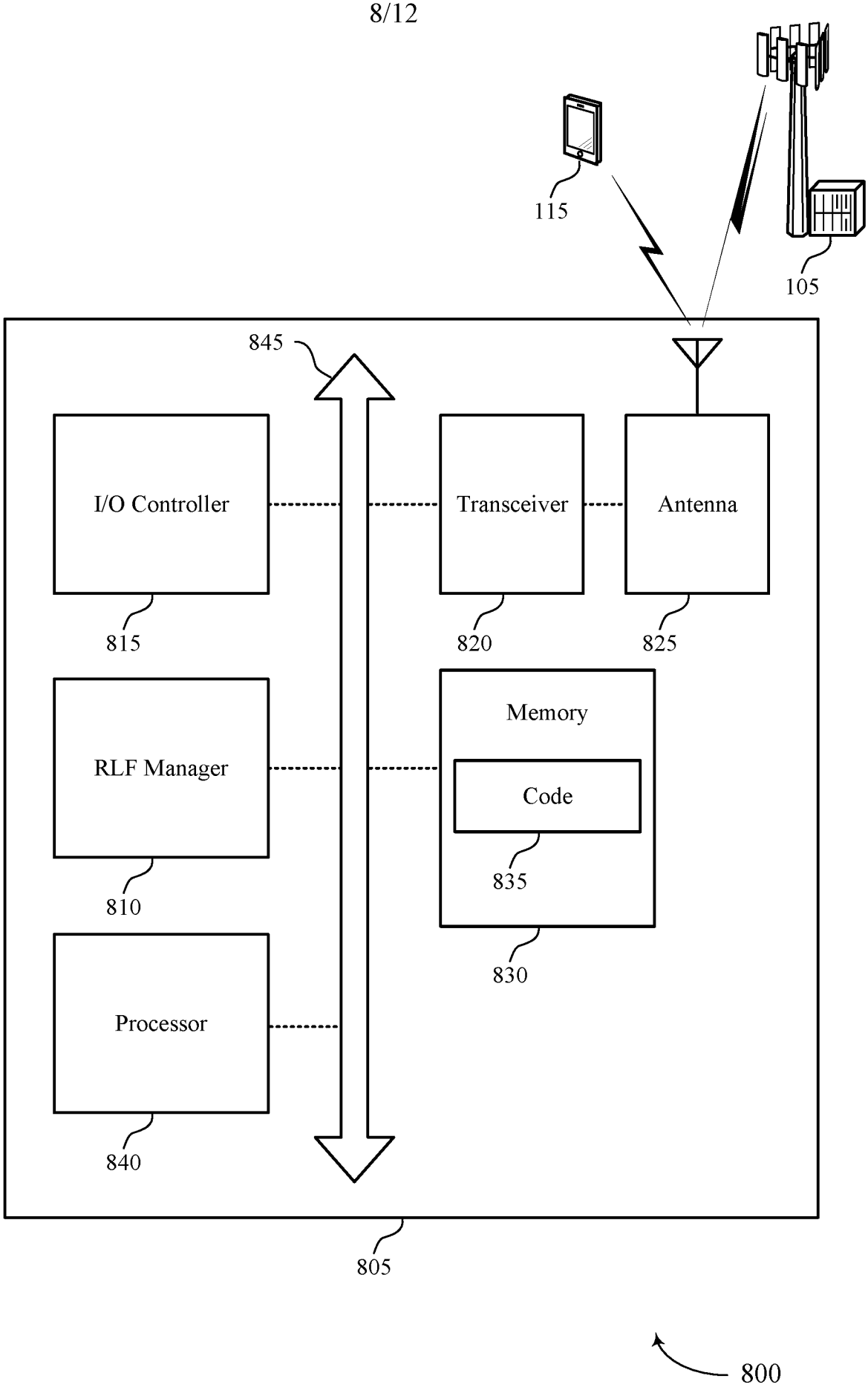
115
105
845
I/O Controller
Transceiver
Antenna
815
820
825
RLF Manager
Memory
Code
835
810
830
Processor
840
805
800

FIG. 8

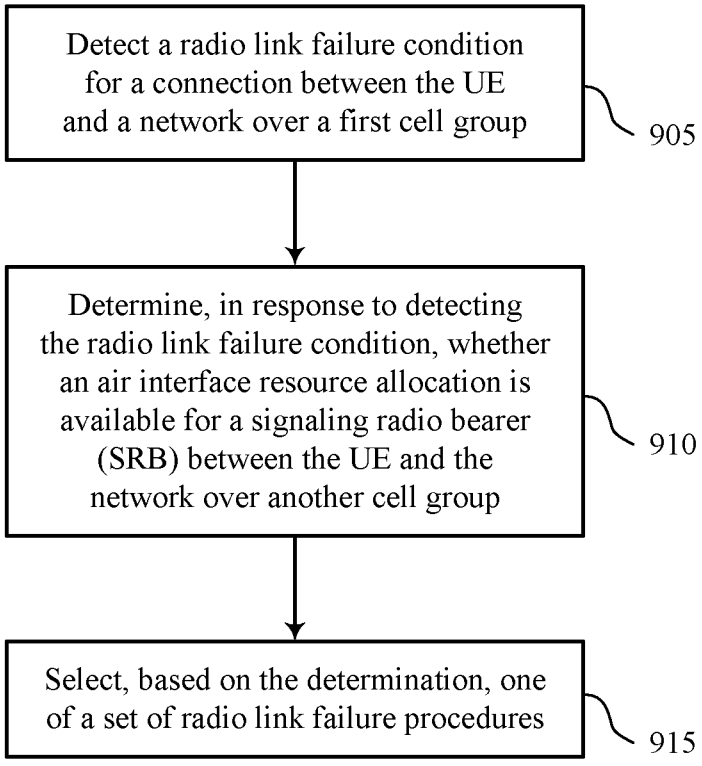
Detect a radio link failure condition for a connection between the UE and a network over a first cell group
905
Determine, in response to detecting the radio link failure condition, whether an air interface resource allocation is available for a signaling radio bearer (SRB) between the UE and the network over another cell group
910
Select, based on the determination, one of a set of radio link failure procedures
915
900

FIG. 9

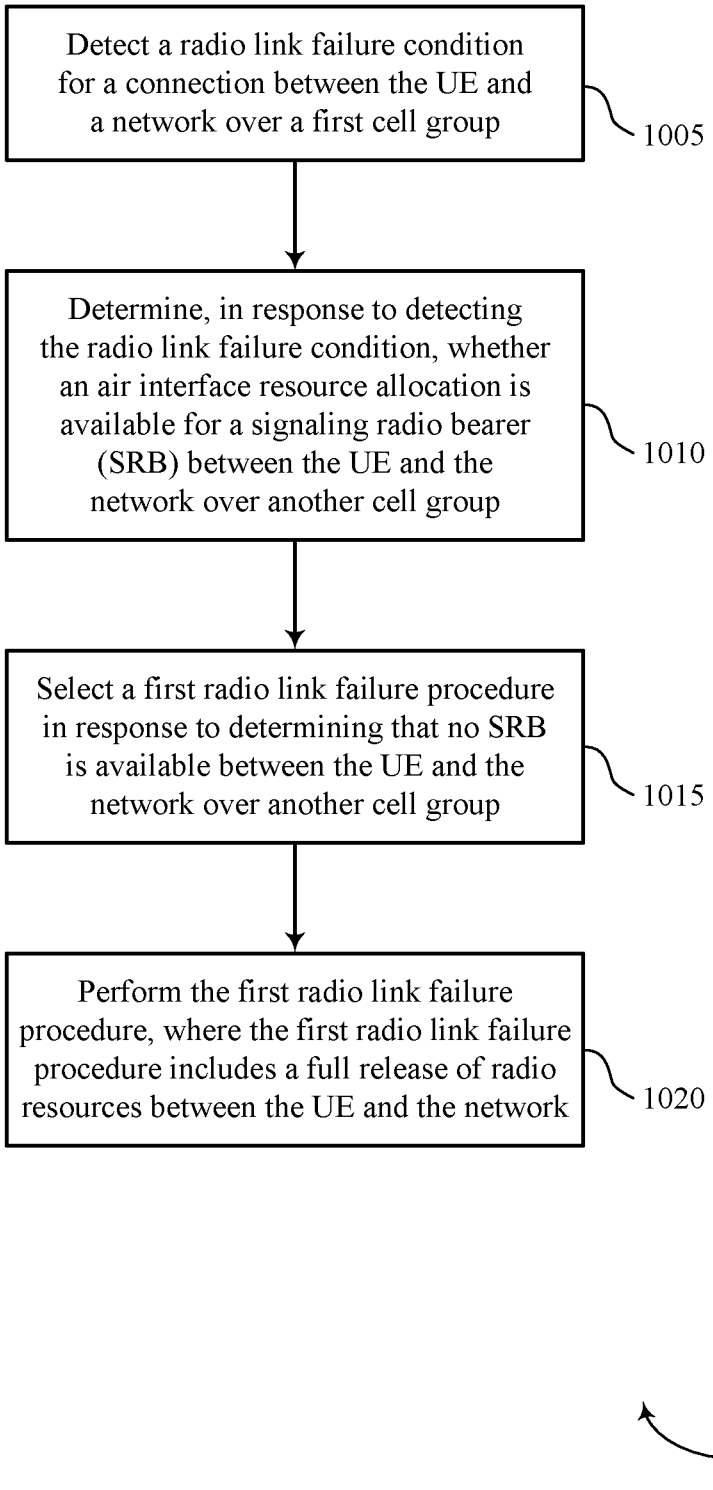
Detect a radio link failure condition for a connection between the UE and a network over a first cell group
1005
Determine, in response to detecting the radio link failure condition, whether an air interface resource allocation is available for a signaling radio bearer (SRB) between the UE and the network over another cell group
1010
Select a first radio link failure procedure in response to determining that no SRB is available between the UE and the network over another cell group
1015
Perform the first radio link failure procedure, where the first radio link failure procedure includes a full release of radio resources between the UE and the network
1020
1000

FIG. 10

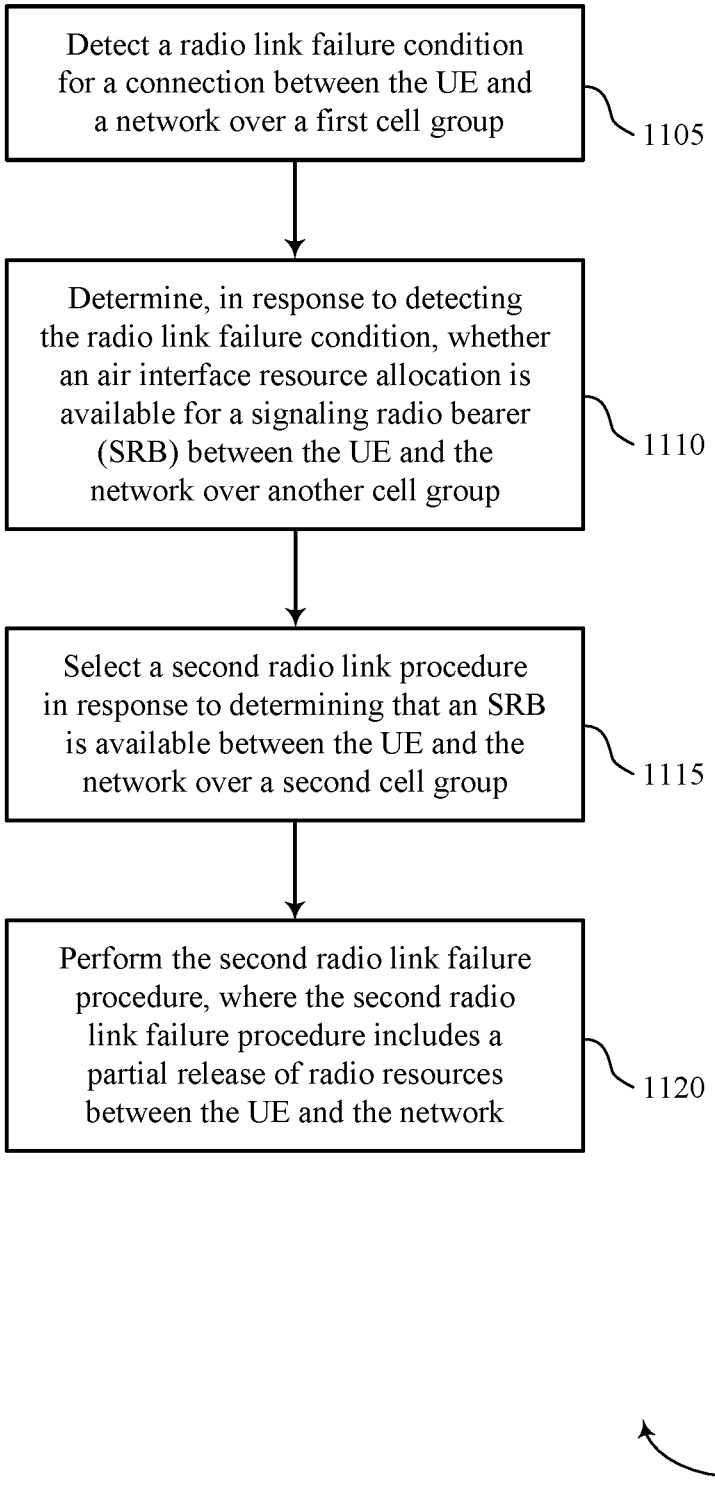
Detect a radio link failure condition for a connection between the UE and a network over a first cell group
1105
Determine, in response to detecting the radio link failure condition, whether an air interface resource allocation is available for a signaling radio bearer (SRB) between the UE and the network over another cell group
1110
Select a second radio link procedure in response to determining that an SRB is available between the UE and the network over a second cell group
1115
Perform the second radio link failure procedure, where the second radio link failure procedure includes a partial release of radio resources between the UE and the network
1120
1100

FIG. 11

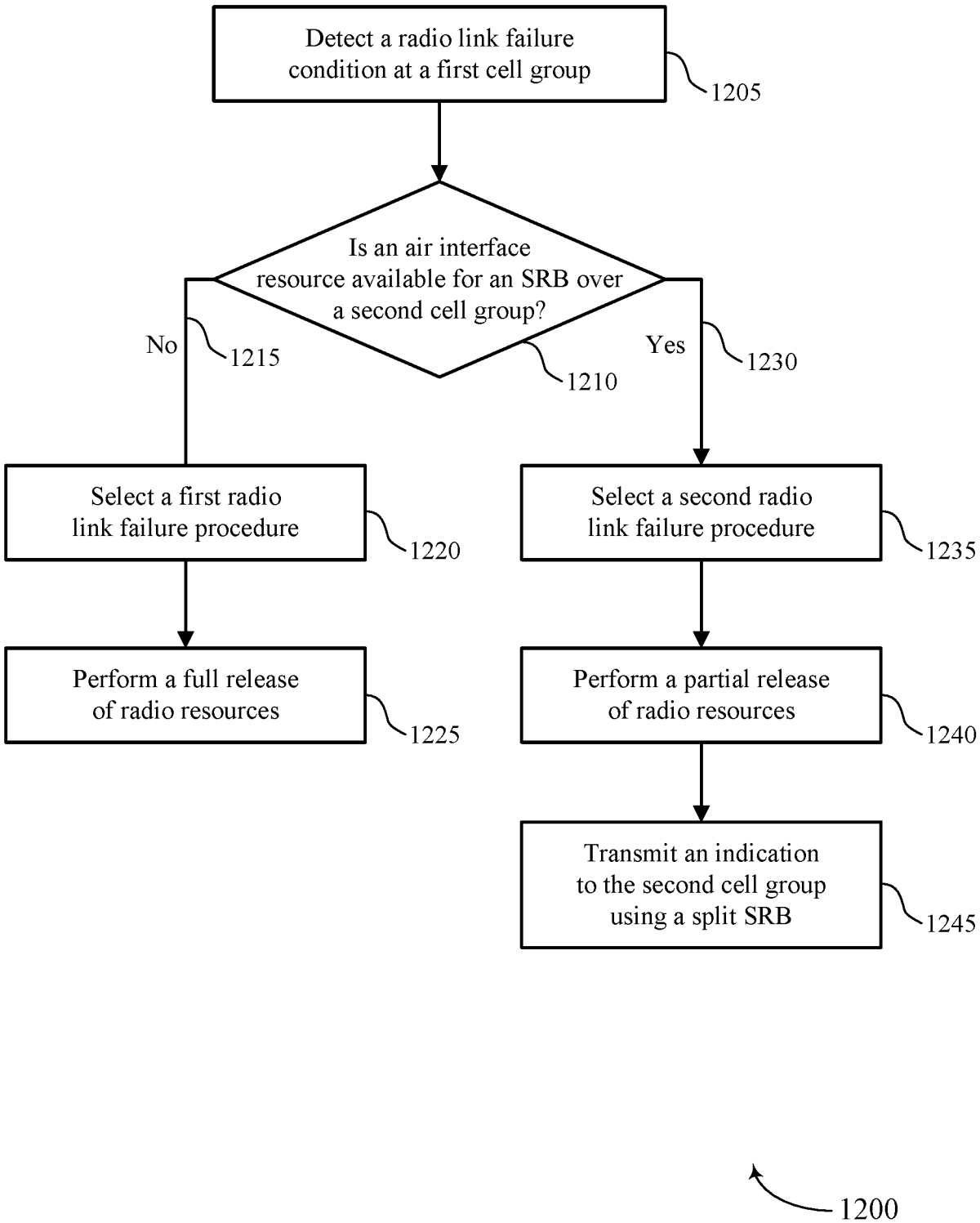
Detect a radio link failure condition at a first cell group
1205
Is an air interface resource available for an SRB over a second cell group?
1210
No
1215
Yes
1230
Select a first radio link failure procedure
1220
Perform a full release of radio resources
1225
Select a second radio link failure procedure
1235
Perform a partial release of radio resources
1240
Transmit an indication to the second cell group using a split SRB
1245
1200

FIG. 12