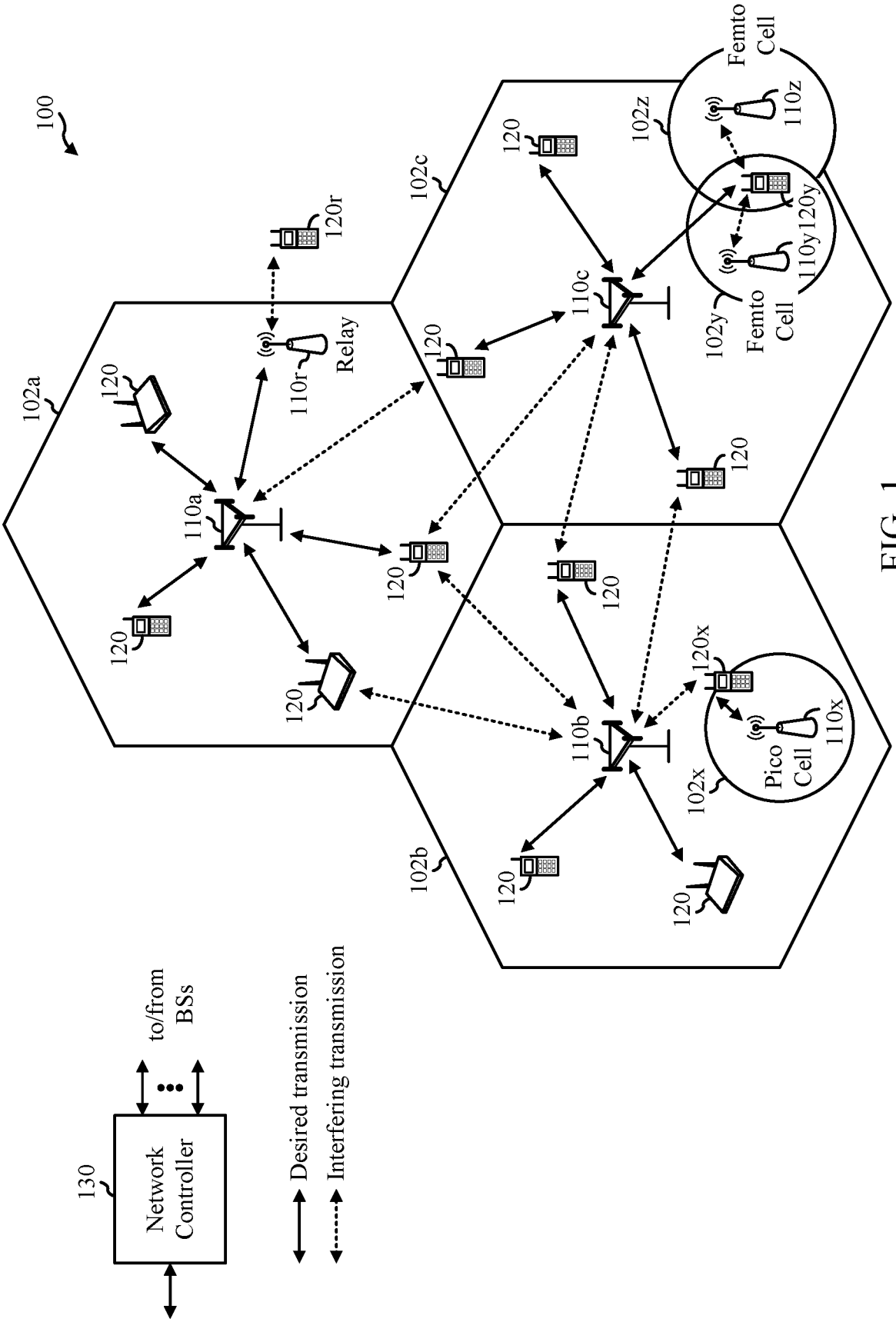
100
102a
102b
102c
102x
102y
102z
110a
110b
110c
110r
110x
110y
110z
120
120r
120x
120y
Relay
Pico Cell
Femto Cell
Femto Cell
130
Network Controller
to/from BSs
Desired transmission
Interfering transmission

FIG. 1

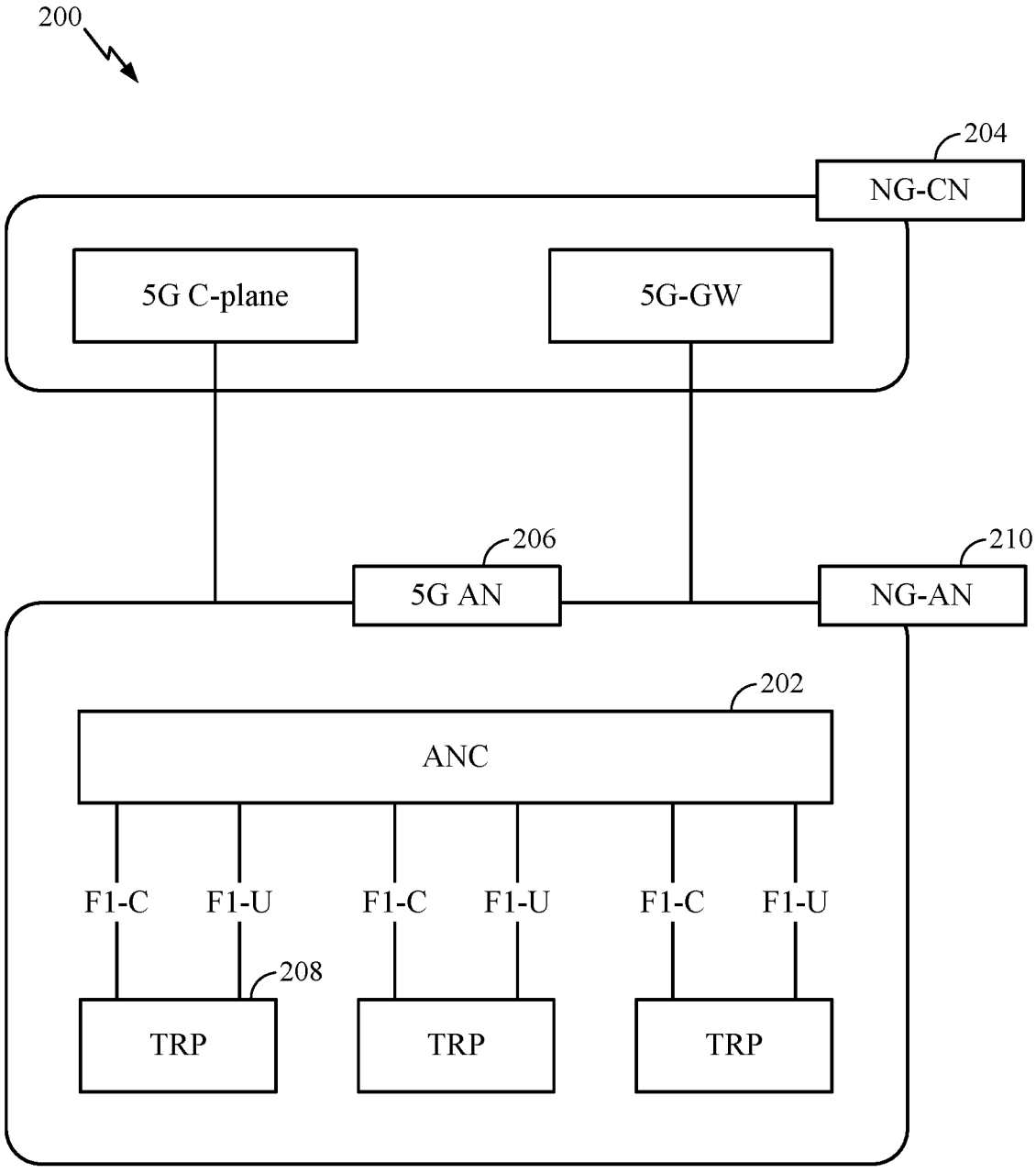
200
204
NG-CN
5G C-plane
5G-GW
206
5G AN
210
NG-AN
202
ANC
F1-C
F1-U
F1-C
F1-U
F1-C
F1-U
208
TRP
TRP
TRP

FIG. 2

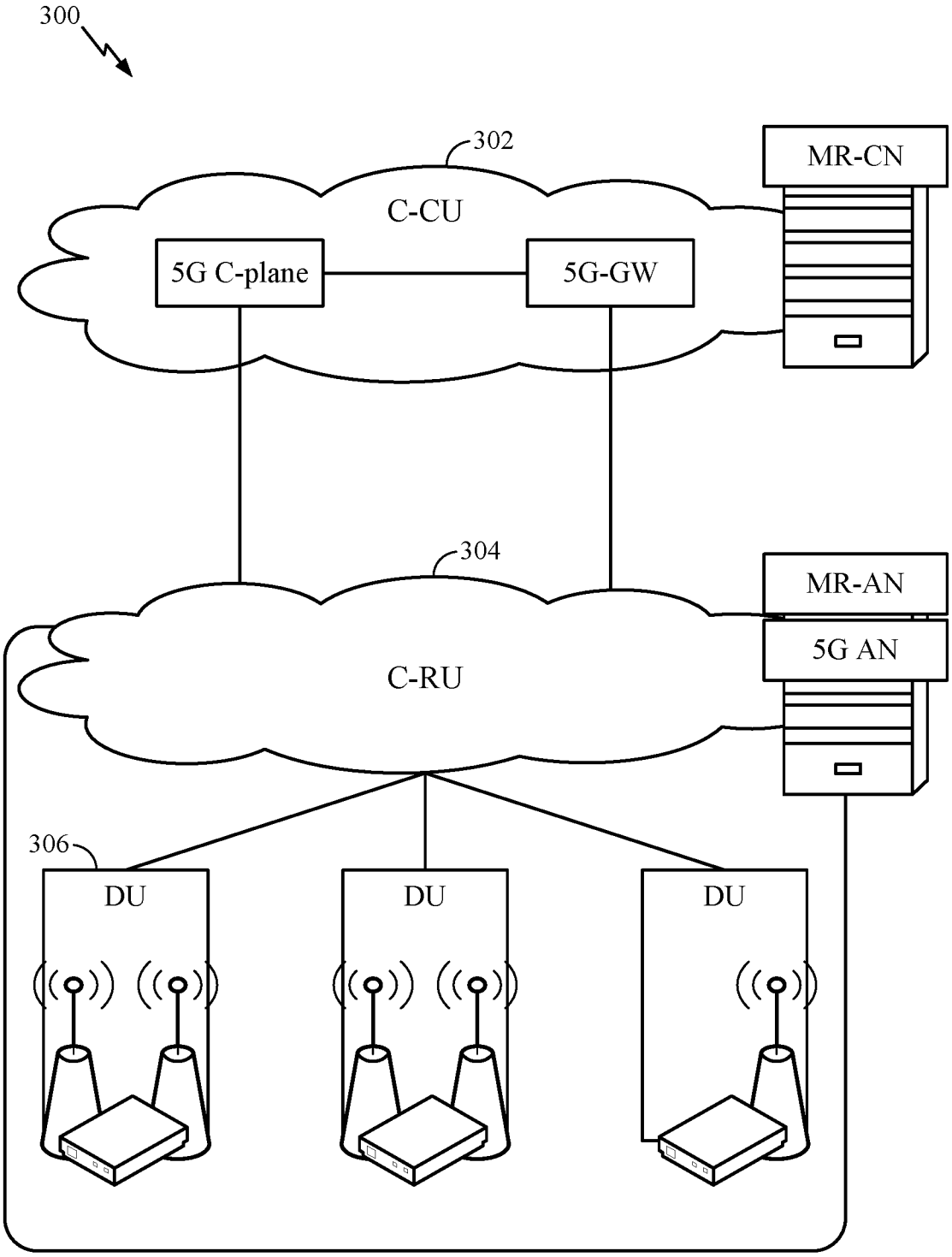

FIG. 3

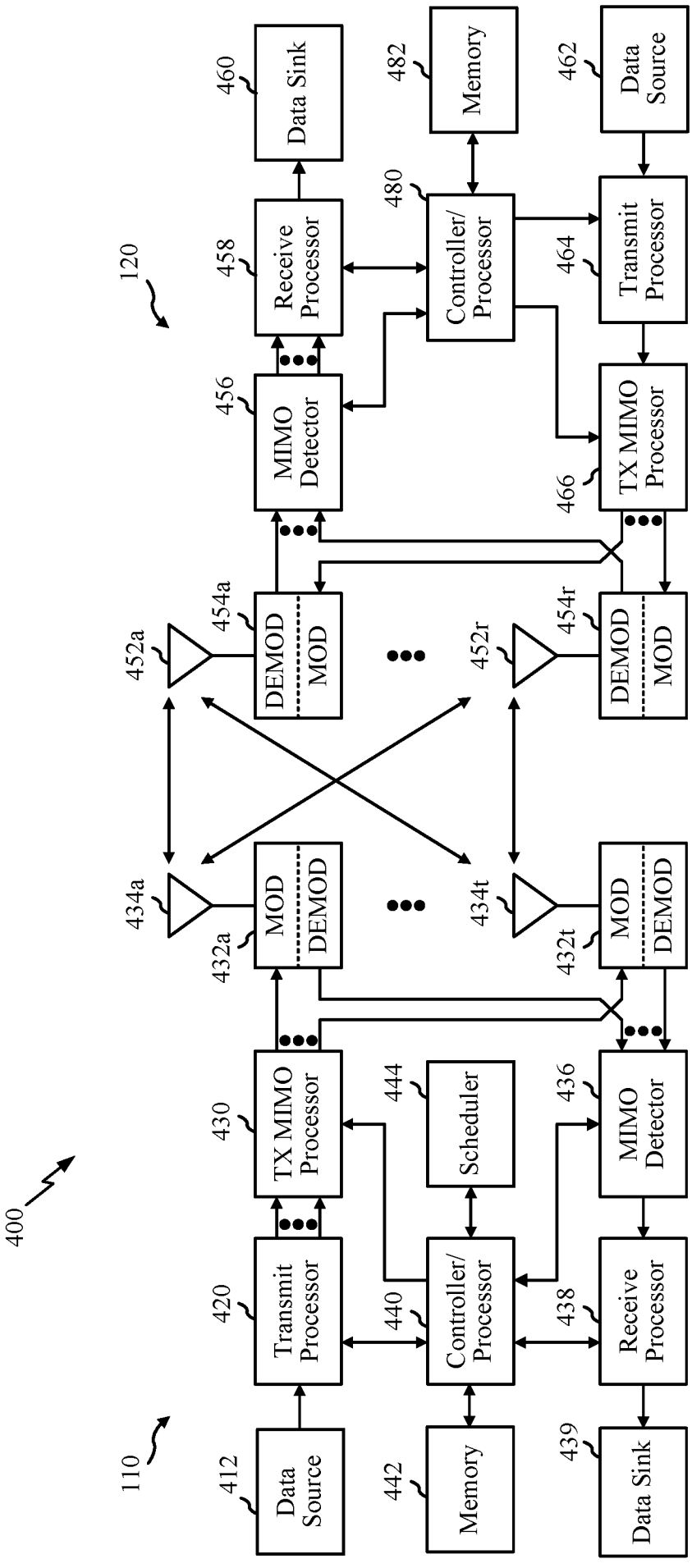
400
110
120
412
Data Source
420
Transmit Processor
430
TX MIMO Processor
432a
MOD
DEMOD
434a
452a
454a
DEMOD
MOD
456
MIMO Detector
458
Receive Processor
460
Data Sink
440
Controller/ Processor
442
Memory
444
Scheduler
434t
432t
452r
454r
466
TX MIMO Processor
480
Controller/ Processor
482
Memory
464
Transmit Processor
462
Data Source
438
Receive Processor
436
MIMO Detector
439
Data Sink

FIG. 4

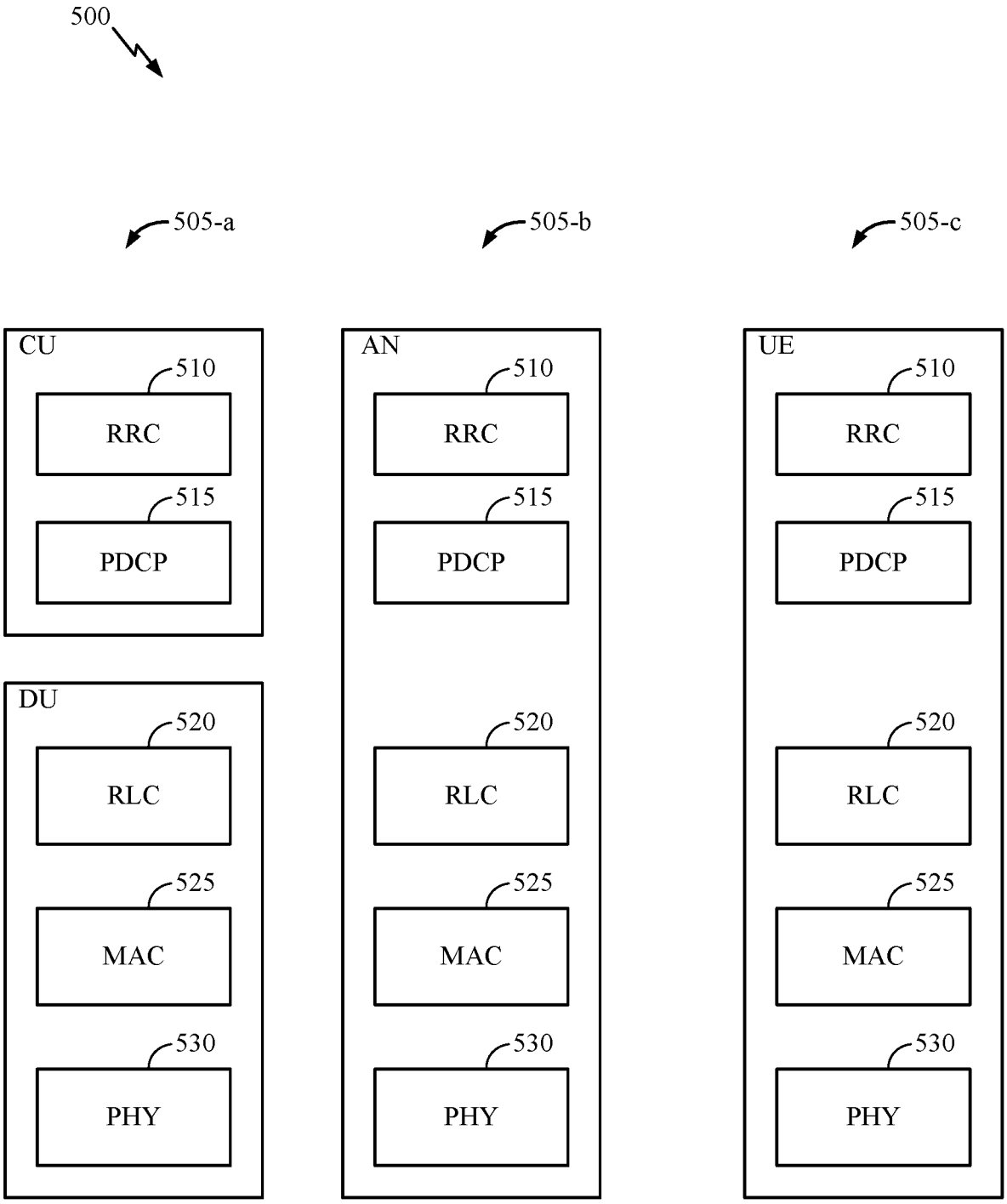
500
505-a
505-b
505-c
CU
510
RRC
515
PDCP
DU
520
RLC
525
MAC
530
PHY
AN
510
RRC
515
PDCP
520
RLC
525
MAC
530
PHY
UE
510
RRC
515
PDCP
520
RLC
525
MAC
530
PHY

FIG. 5

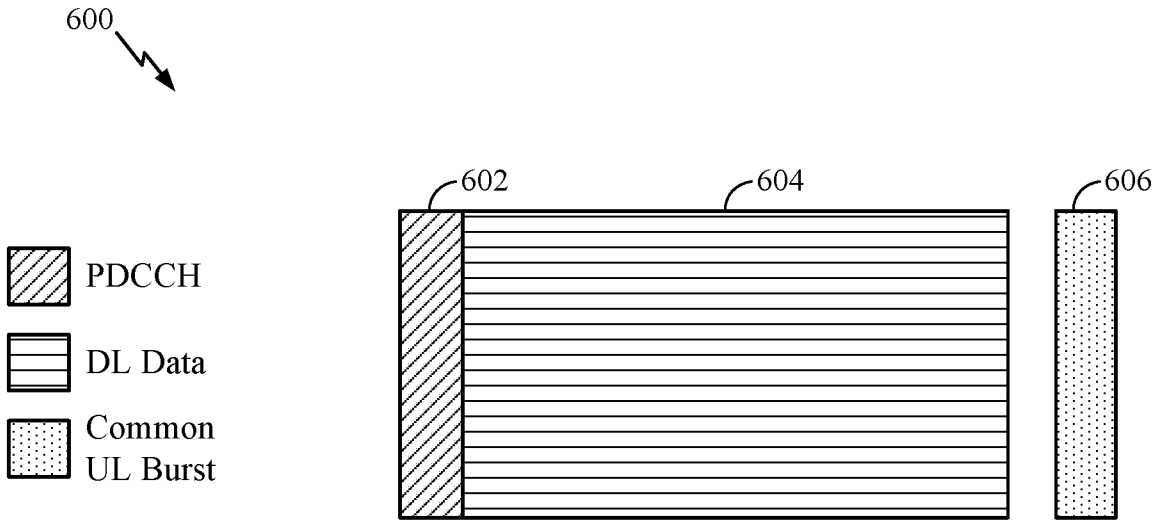
600
602
604
606
PDCCH
DL Data
Common
UL Burst

FIG. 6

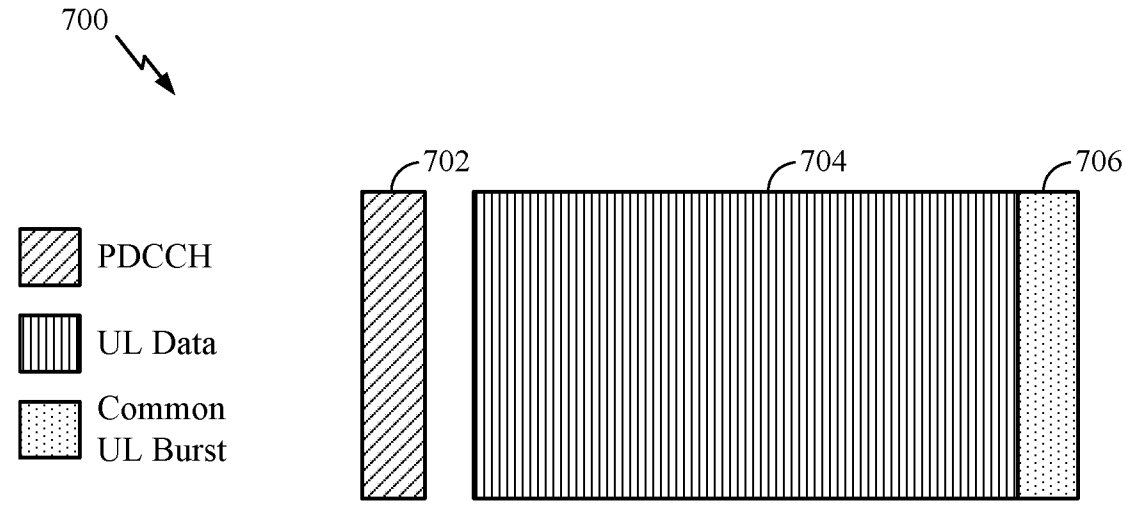
700
702
704
706
PDCCH
UL Data
Common
UL Burst

FIG. 7

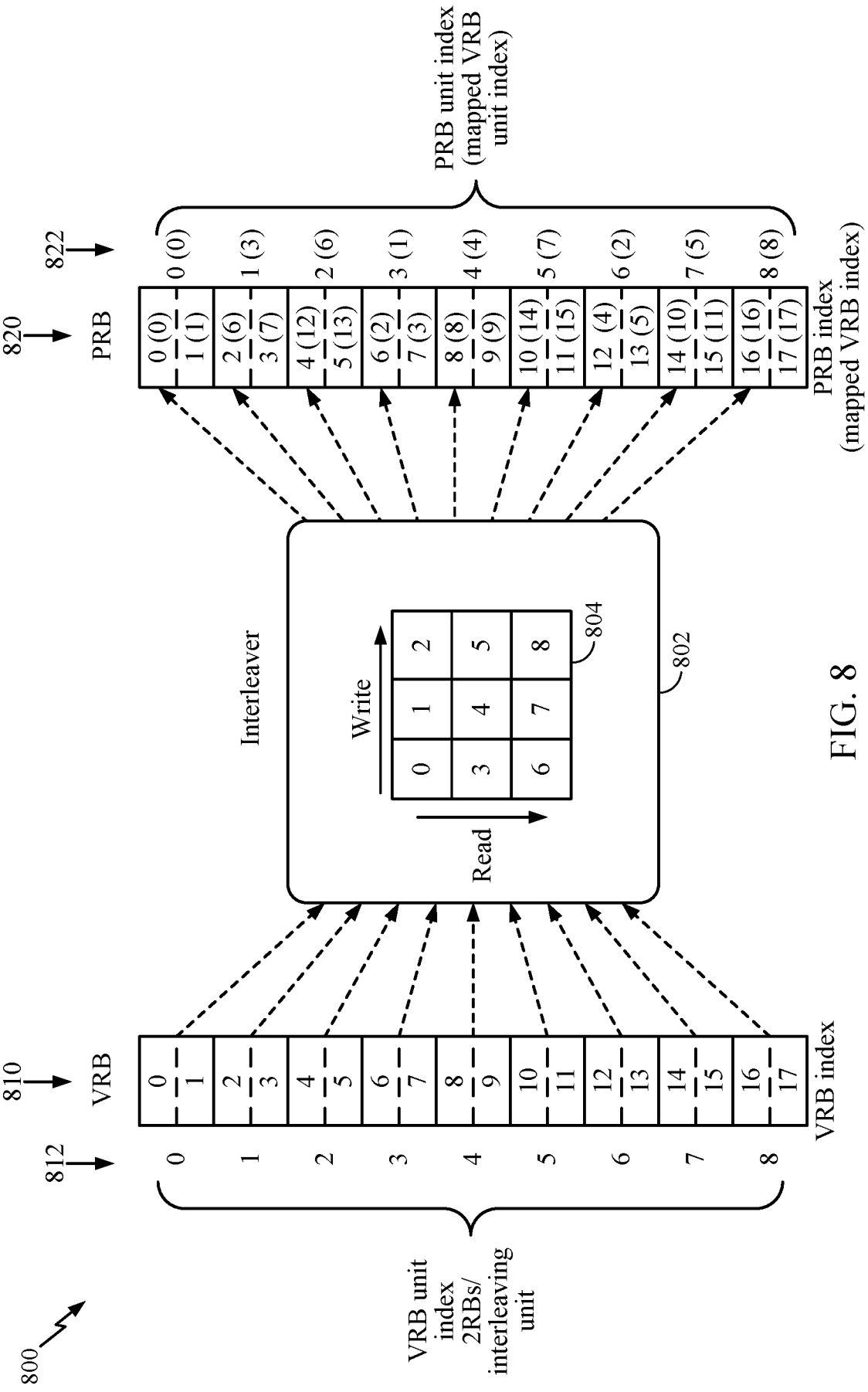
800
VRB unit index 2RBs/ interleaving unit
812
VRB
810
0 1 2 3 4 5 6 7 8
VRB index
Interleaver
Write
Read
804
802
PRB
820
822
0 (0) 1 (1) 2 (6) 3 (7) 4 (12) 5 (13) 6 (2) 7 (3) 8 (8) 9 (9) 10 (14) 11 (15) 12 (4) 13 (5) 14 (10) 15 (11) 16 (16) 17 (17)
PRB index (mapped VRB index)
PRB unit index (mapped VRB unit index)
0 (0) 1 (3) 2 (6) 3 (1) 4 (4) 5 (7) 6 (2) 7 (5) 8 (8)

FIG. 8

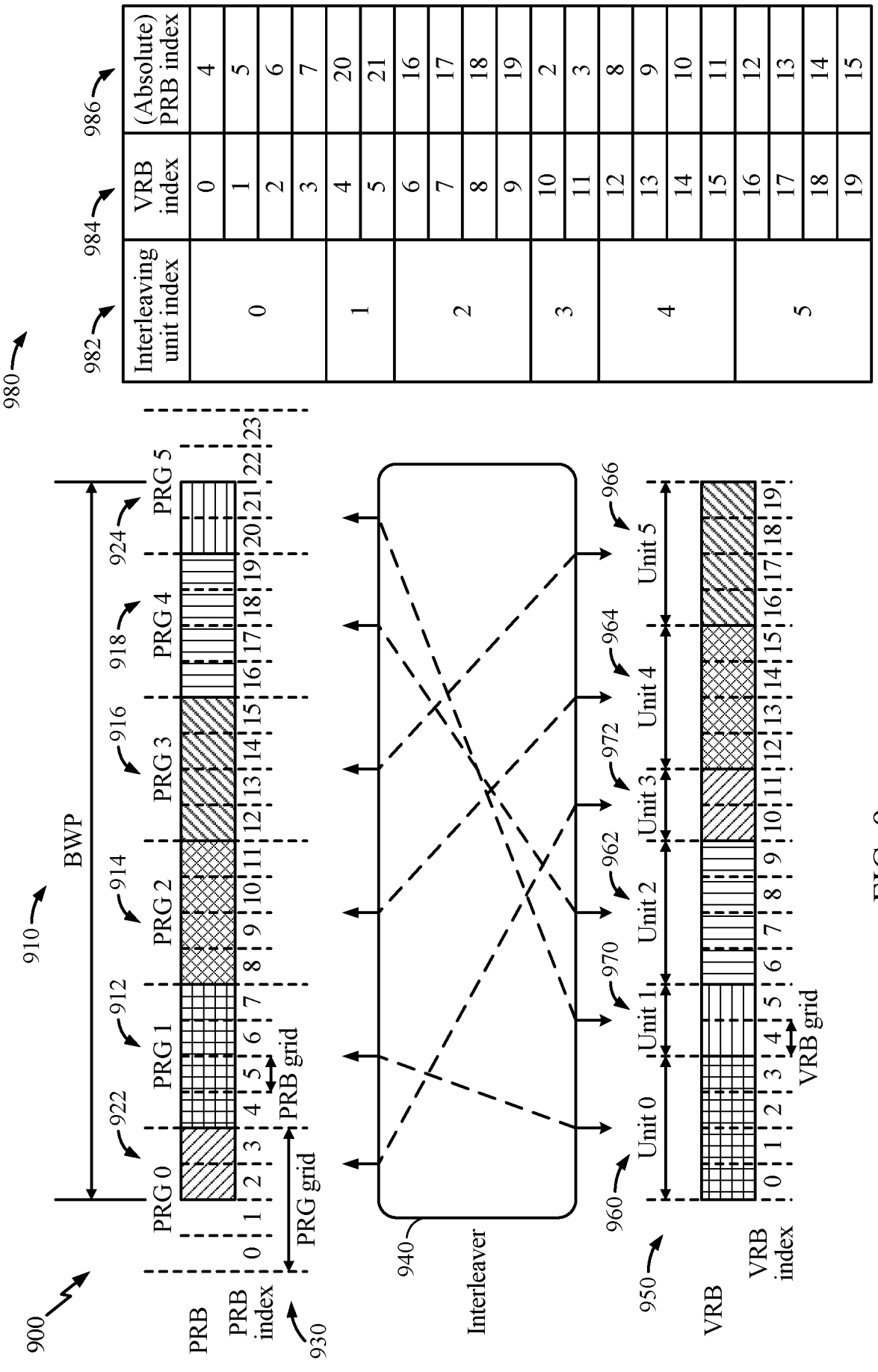

Interleaving unit index	VRB index	(Absolute) PRB index
0	0	4
	1	5
	2	6
	3	7
1	4	20
	5	21
2	6	16
	7	17
	8	18
	9	19
3	10	2
	11	3
4	12	8
	13	9
	14	10
	15	11
5	16	12
	17	13
	18	14
	19	15

FIG. 9

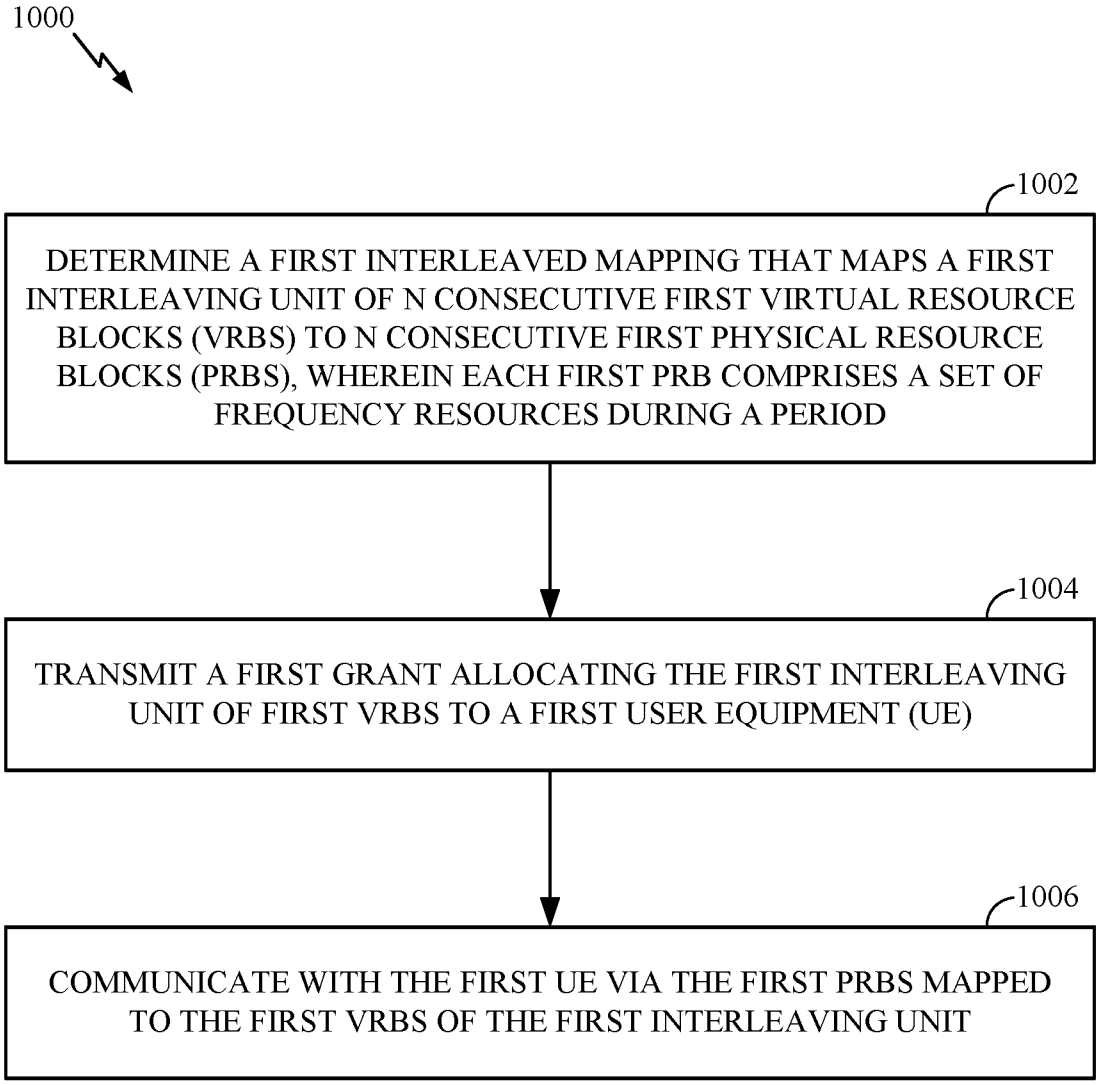
1000
1002
DETERMINE A FIRST INTERLEAVED MAPPING THAT MAPS A FIRST INTERLEAVING UNIT OF N CONSECUTIVE FIRST VIRTUAL RESOURCE BLOCKS (VRBS) TO N CONSECUTIVE FIRST PHYSICAL RESOURCE BLOCKS (PRBS), WHEREIN EACH FIRST PRB COMPRISES A SET OF FREQUENCY RESOURCES DURING A PERIOD
1004
TRANSMIT A FIRST GRANT ALLOCATING THE FIRST INTERLEAVING UNIT OF FIRST VRBS TO A FIRST USER EQUIPMENT (UE)
1006
COMMUNICATE WITH THE FIRST UE VIA THE FIRST PRBS MAPPED TO THE FIRST VRBS OF THE FIRST INTERLEAVING UNIT

FIG. 10

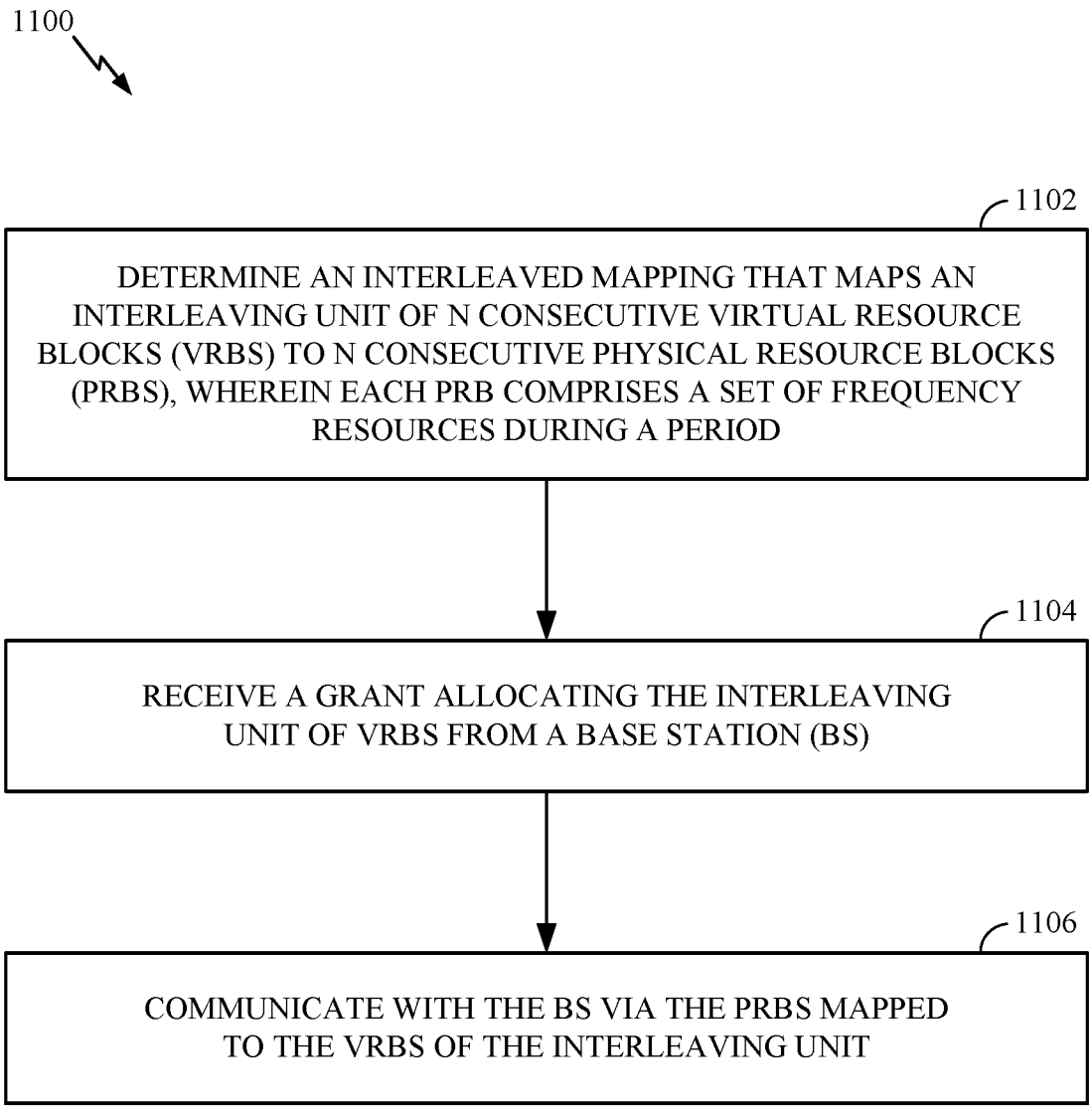
1100
1102
DETERMINE AN INTERLEAVED MAPPING THAT MAPS AN INTERLEAVING UNIT OF N CONSECUTIVE VIRTUAL RESOURCE BLOCKS (VRBS) TO N CONSECUTIVE PHYSICAL RESOURCE BLOCKS (PRBS), WHEREIN EACH PRB COMPRISES A SET OF FREQUENCY RESOURCES DURING A PERIOD
1104
RECEIVE A GRANT ALLOCATING THE INTERLEAVING UNIT OF VRBS FROM A BASE STATION (BS)
1106
COMMUNICATE WITH THE BS VIA THE PRBS MAPPED TO THE VRBS OF THE INTERLEAVING UNIT

FIG. 11

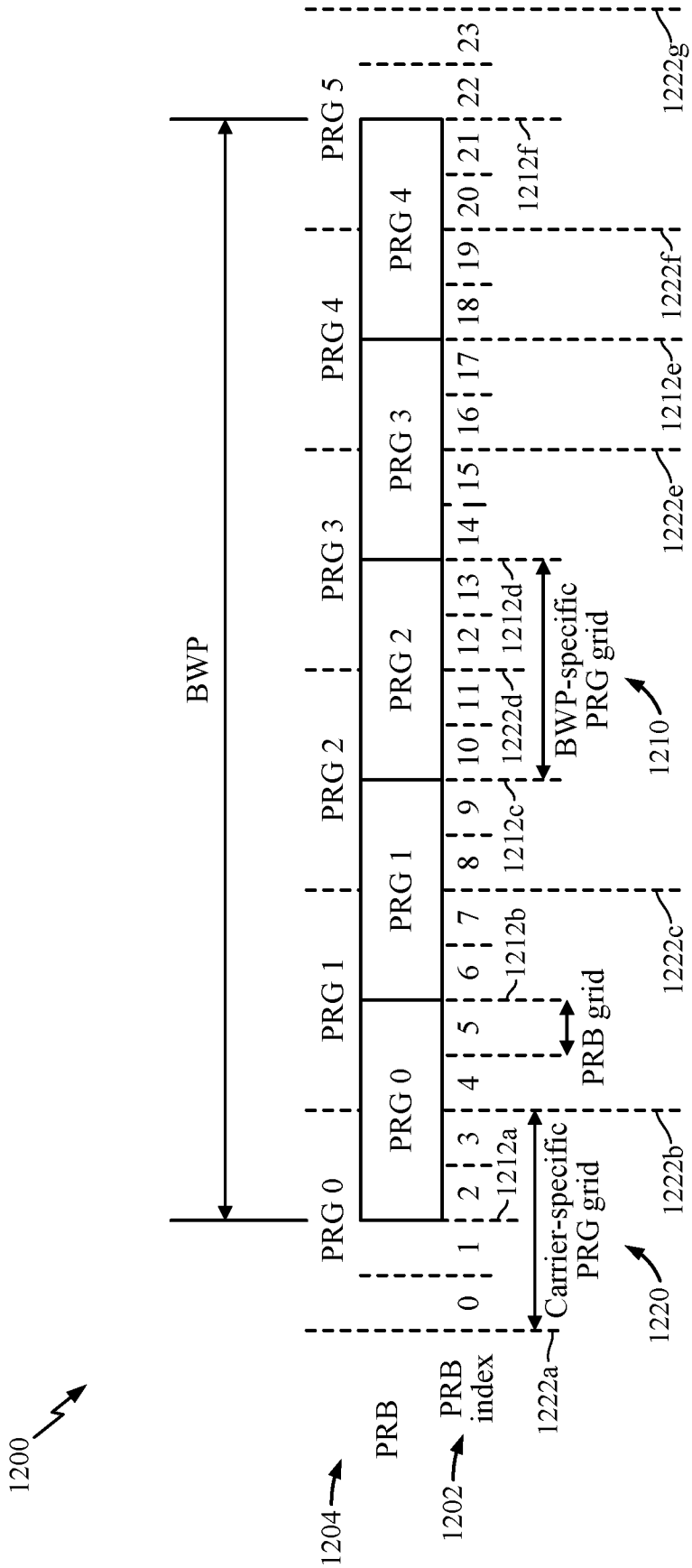
1200
1204
PRB
1202
PRB index
0
1
2
3
4
5
6
7
8
9
10
11
12
13
14
15
16
17
18
19
20
21
22
23
PRG 0
PRG 1
PRG 2
PRG 3
PRG 4
PRG 5
BWP
1222a
1222b
1222c
1222d
1222e
1222f
1222g
1212a
1212b
1212c
1212d
1212e
1212f
1220
1210
Carrier-specific PRG grid
PRB grid
BWP-specific PRG grid

FIG. 12

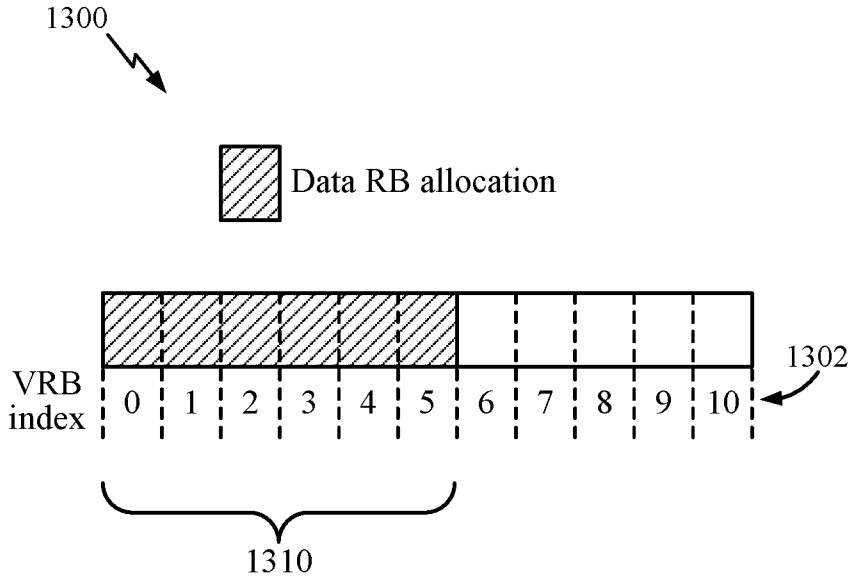

FIG. 13A

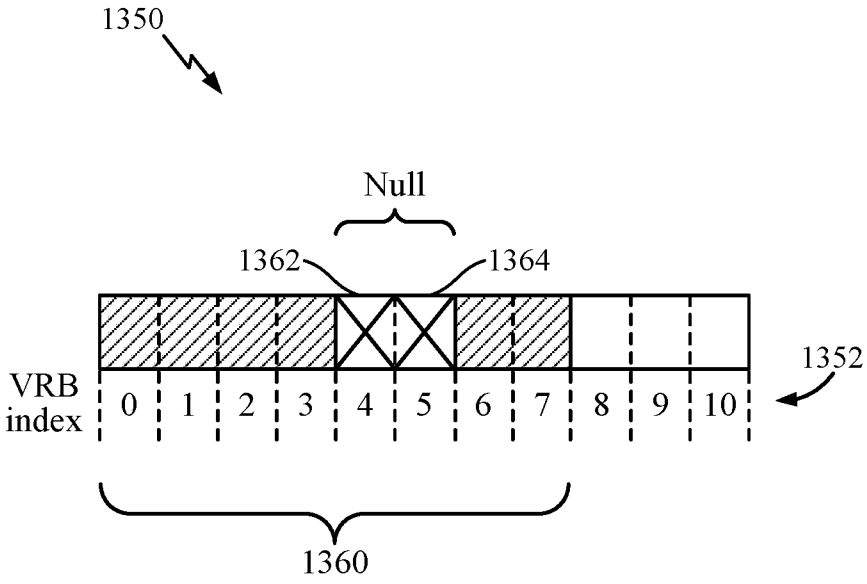

FIG. 13B

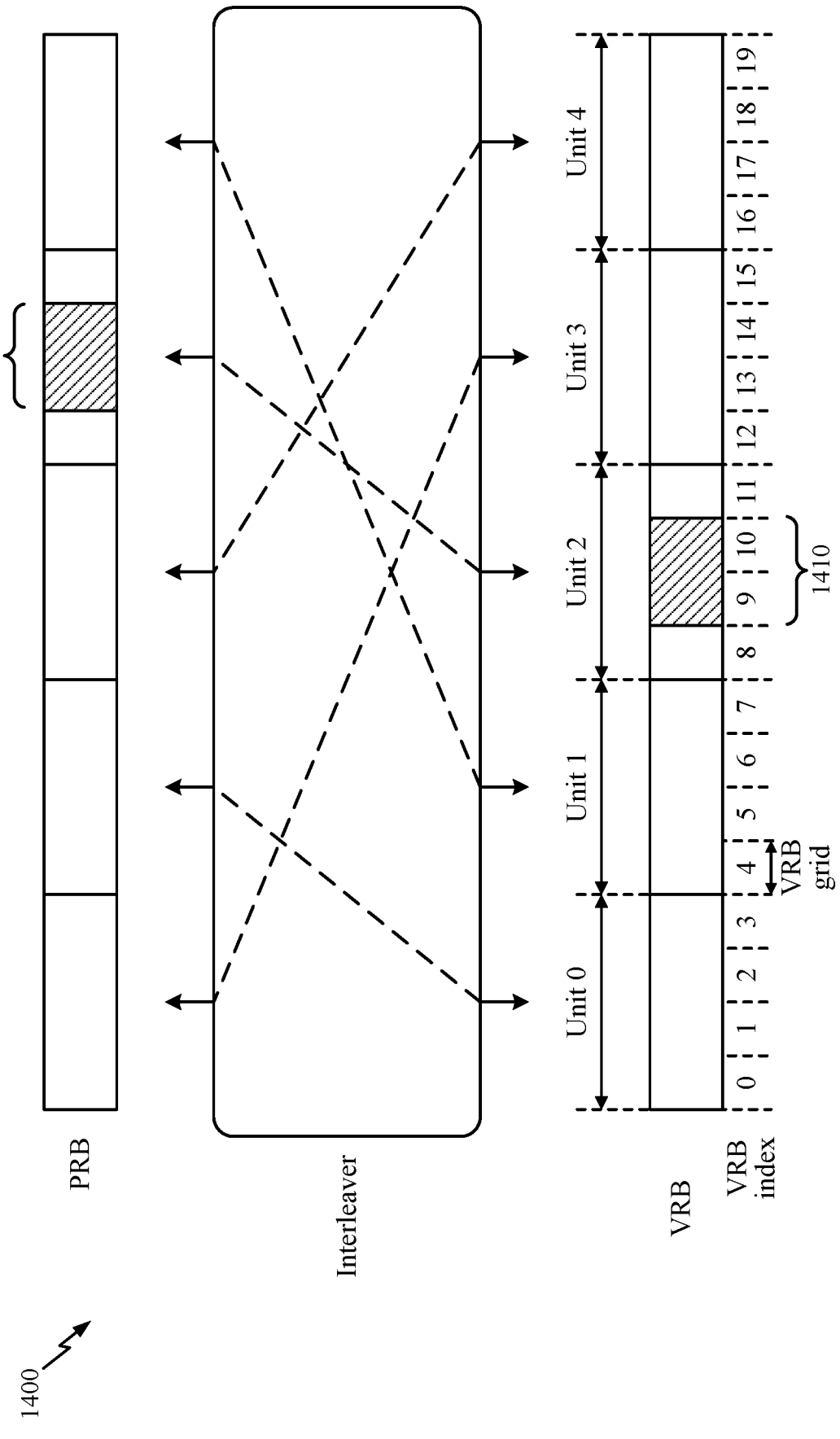
1400
PRB
1420
Interleaver
VRB
VRB index
Unit 0
Unit 1
Unit 2
Unit 3
Unit 4
0
1
2
3
4
5
6
7
8
9
10
11
12
13
14
15
16
17
18
19
VRB grid
1410

FIG. 14A

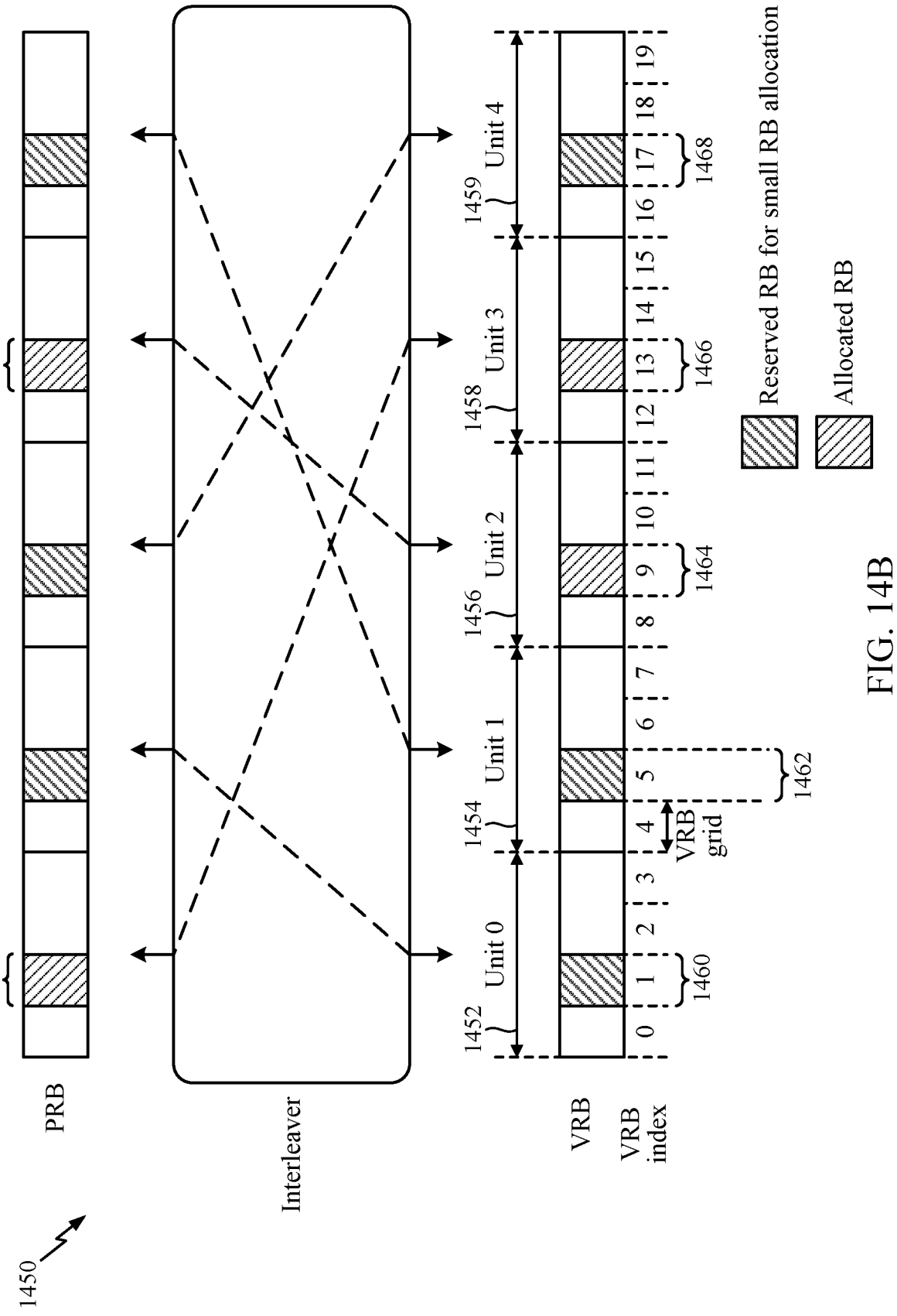
1450
PRB
1470
1472
Interleaver
VRB
VRB index
0
1
2
3
4
5
6
7
8
9
10
11
12
13
14
15
16
17
18
19
Unit 0
Unit 1
Unit 2
Unit 3
Unit 4
1452
1454
1456
1458
1459
1460
1462
1464
1466
1468
VRB grid
Reserved RB for small RB allocation
Allocated RB

FIG. 14B

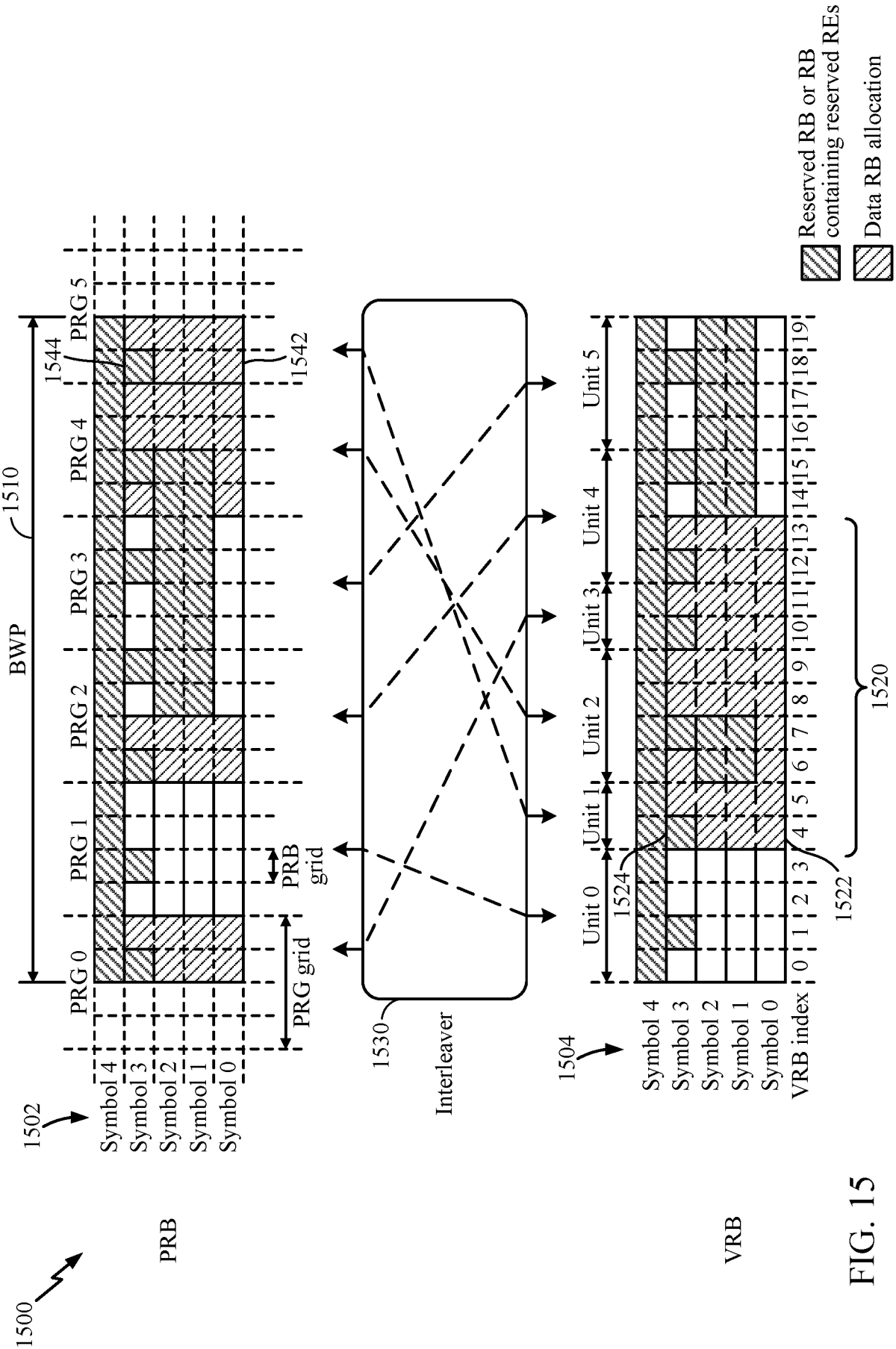
1500
PRB
1502
Symbol 4
Symbol 3
Symbol 2
Symbol 1
Symbol 0
PRG 0
PRG 1
PRG 2
PRG 3
PRG 4
PRG 5
BWP
1510
1544
1542
PRB grid
PRG grid
1530
Interleaver
1504
VRB
Symbol 4
Symbol 3
Symbol 2
Symbol 1
Symbol 0
VRB index
0 1 2 3 4 5 6 7 8 9 10 11 12 13 14 15 16 17 18 19
Unit 0
Unit 1
Unit 2
Unit 3
Unit 4
Unit 5
1524
1522
1520
Reserved RB or RB containing reserved REs
Data RB allocation

FIG. 15