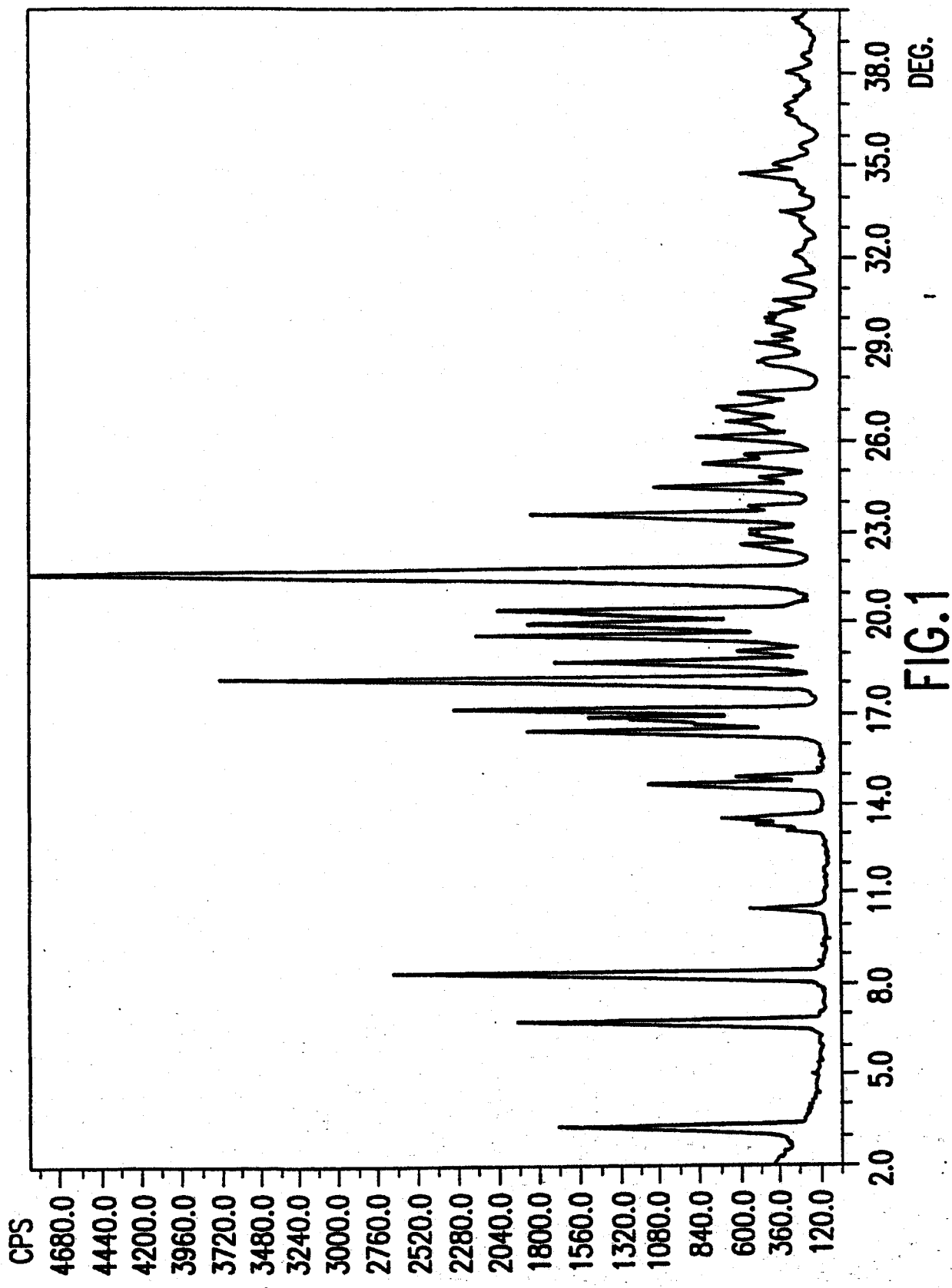
CPS
4680.0
4440.0
4200.0
3960.0
3720.0
3480.0
3240.0
3000.0
2760.0
2520.0
2280.0
2040.0
1800.0
1560.0
1320.0
1080.0
840.0
600.0
360.0
120.0
2.0
5.0
8.0
11.0
14.0
17.0
20.0
23.0
26.0
29.0
32.0
35.0
38.0
DEG.

FIG. 1

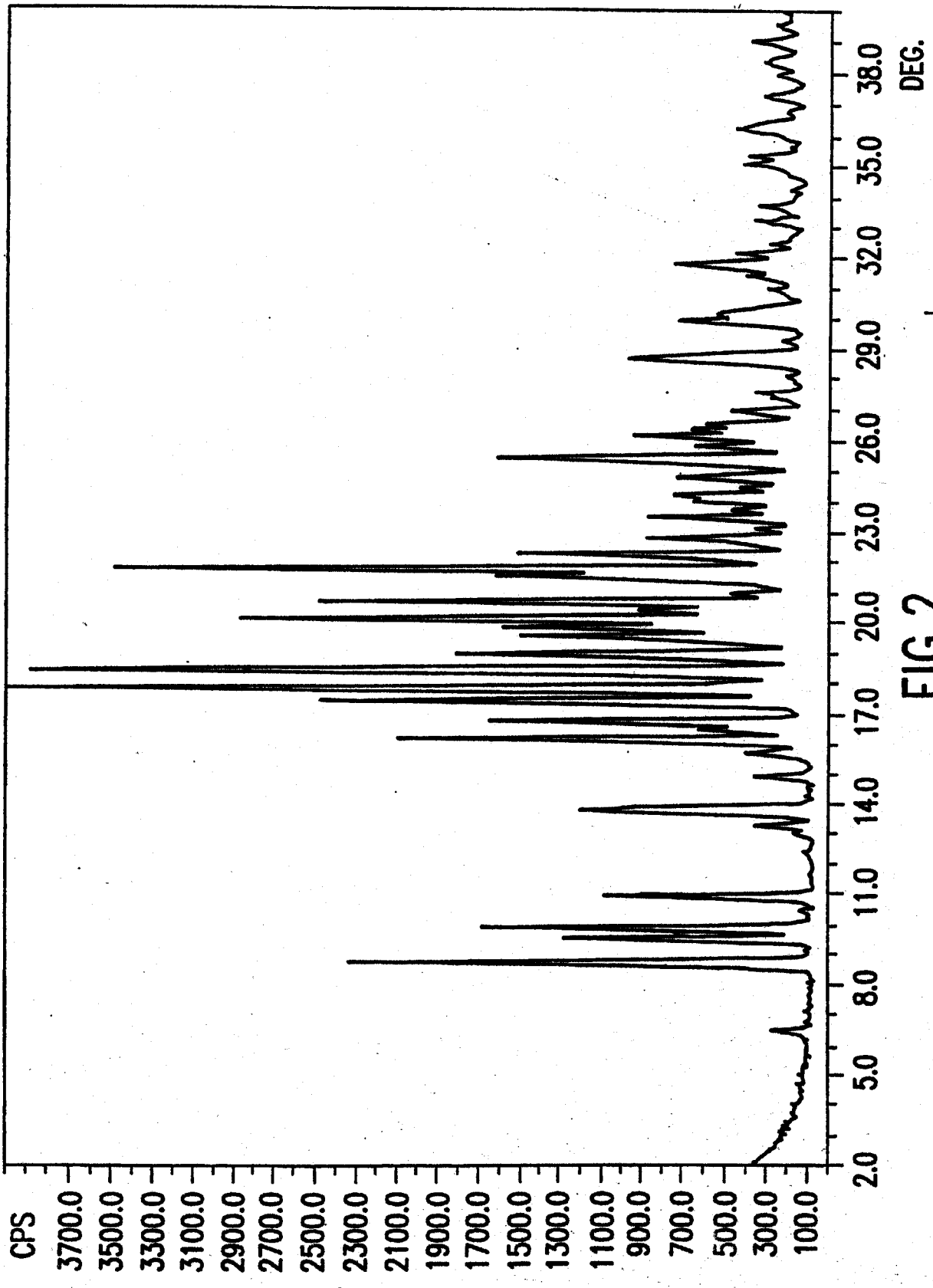
CPS
3700.0
3500.0
3300.0
3100.0
2900.0
2700.0
2500.0
2300.0
2100.0
1900.0
1700.0
1500.0
1300.0
1100.0
900.0
700.0
500.0
300.0
100.0
2.0
5.0
8.0
11.0
14.0
17.0
20.0
23.0
26.0
29.0
32.0
35.0
38.0
DEG.

FIG.2

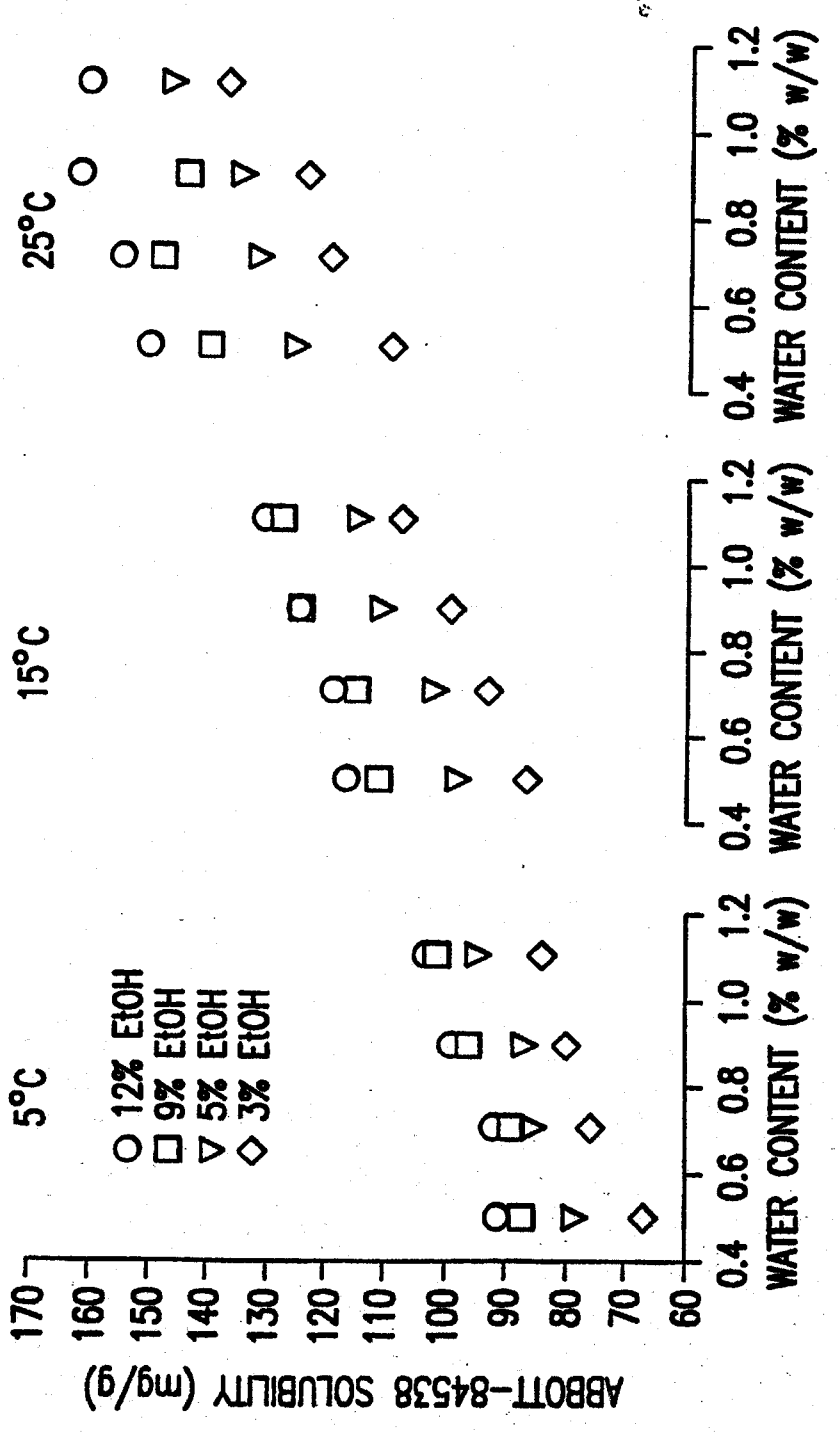

FIG. 3A FIG. 3B FIG. 3C

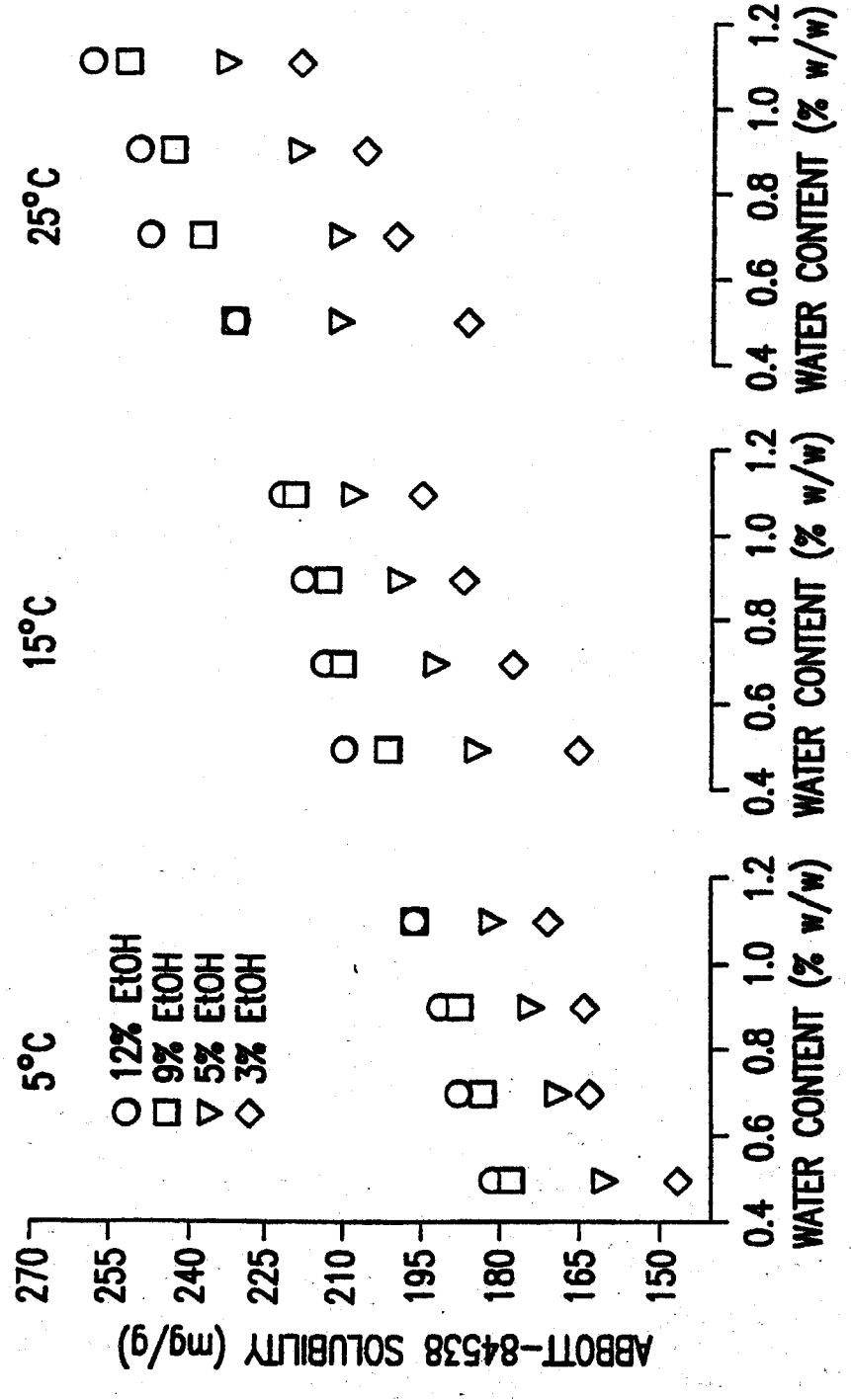

FIG. 4A FIG. 4B FIG. 4C

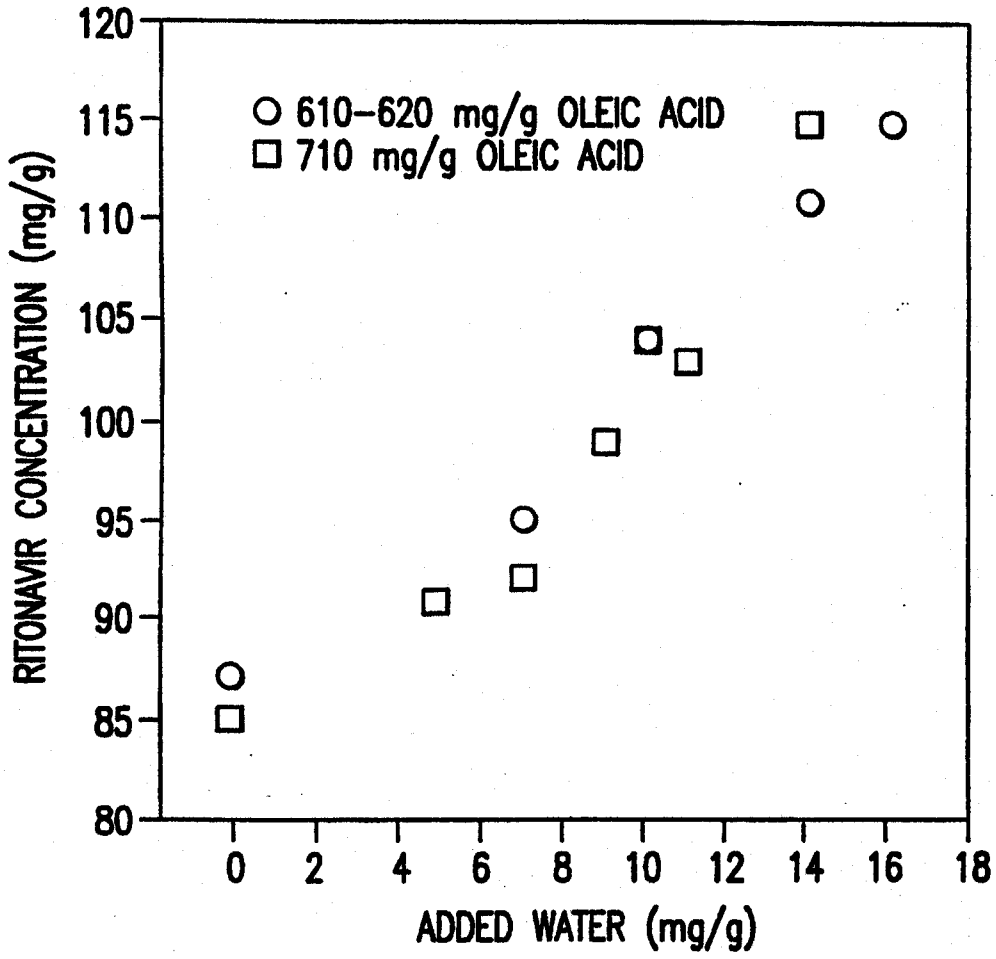
120
115
110
105
100
95
90
85
80
RITONAVIR CONCENTRATION (mg/g)
610–620 mg/g OLEIC ACID
710 mg/g OLEIC ACID
0
2
4
6
8
10
12
14
16
18
ADDED WATER (mg/g)

FIG.5

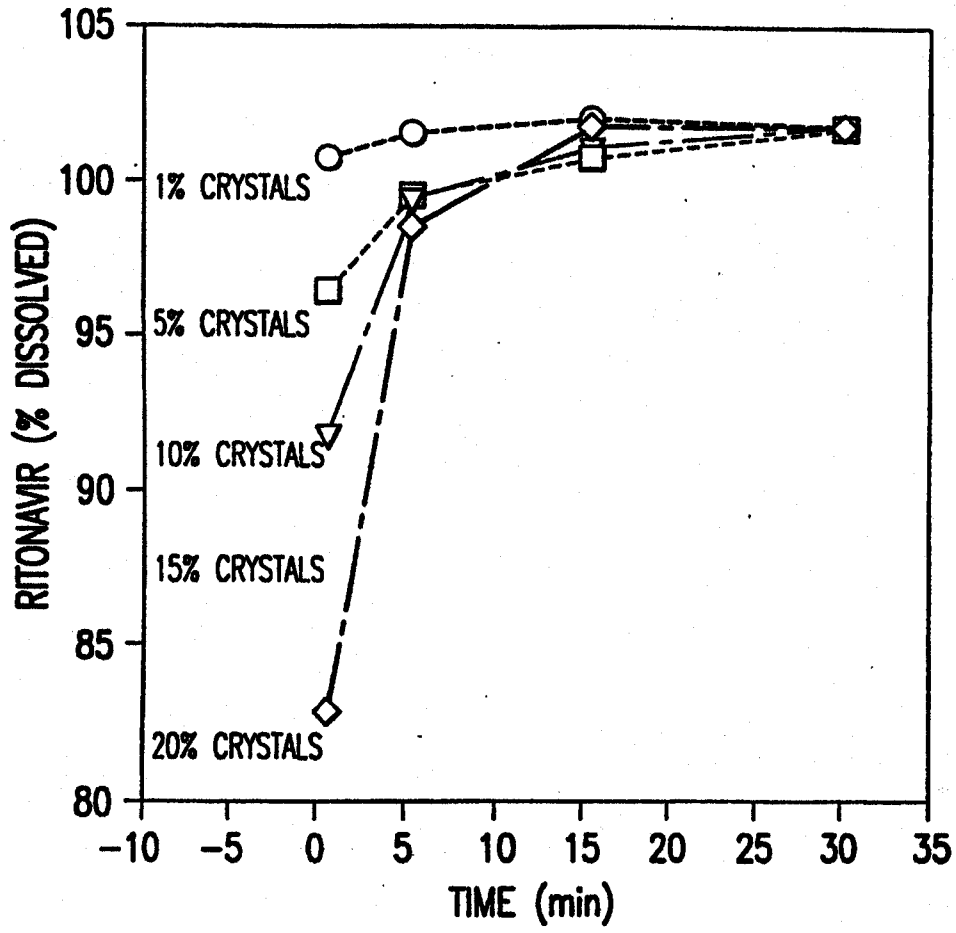
105
100
95
90
85
80
RITONAVIR (% DISSOLVED)
1% CRYSTALS
5% CRYSTALS
10% CRYSTALS
15% CRYSTALS
20% CRYSTALS
−10
−5
0
5
10
15
20
25
30
35
TIME (min)

FIG.6

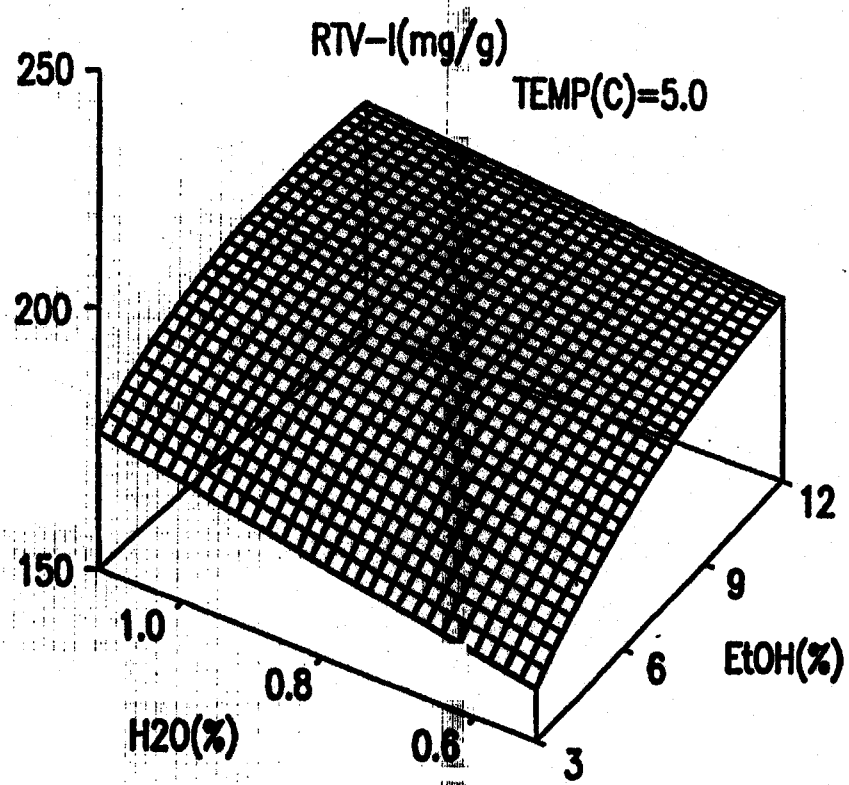
RTV-I(mg/g)
TEMP(C)=5.0
250
200
150
1.0
0.8
0.6
H2O(%)
3
6
9
12
EtOH(%)

FIG. 7A

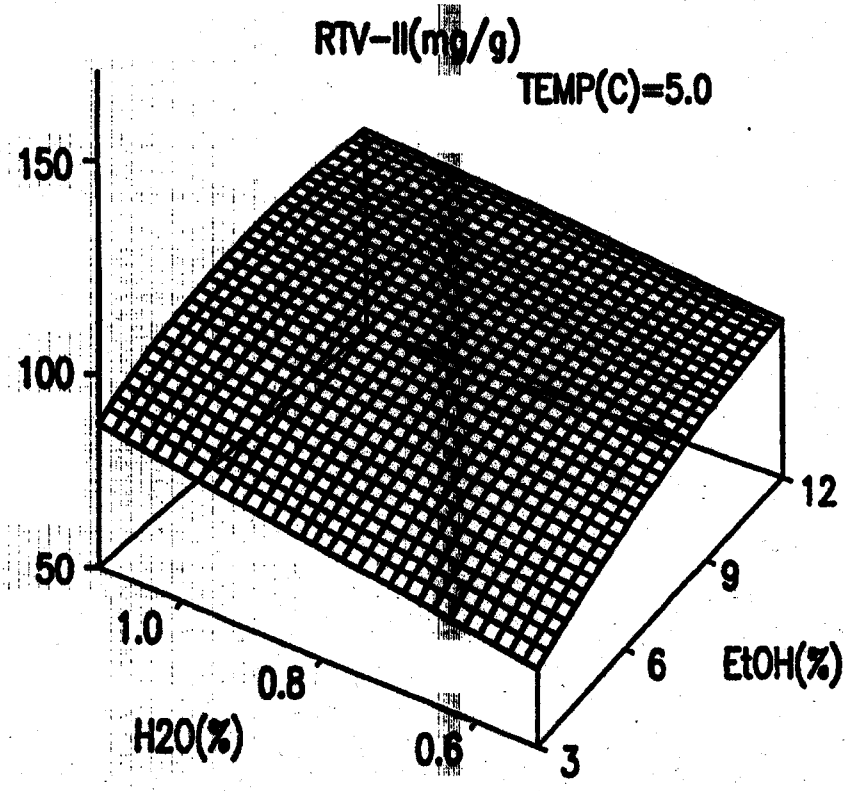
RTV-II(mg/g)
TEMP(C)=5.0
150
100
50
1.0
0.8
0.6
H2O(%)
3
6
9
12
EtOH(%)

FIG. 7B

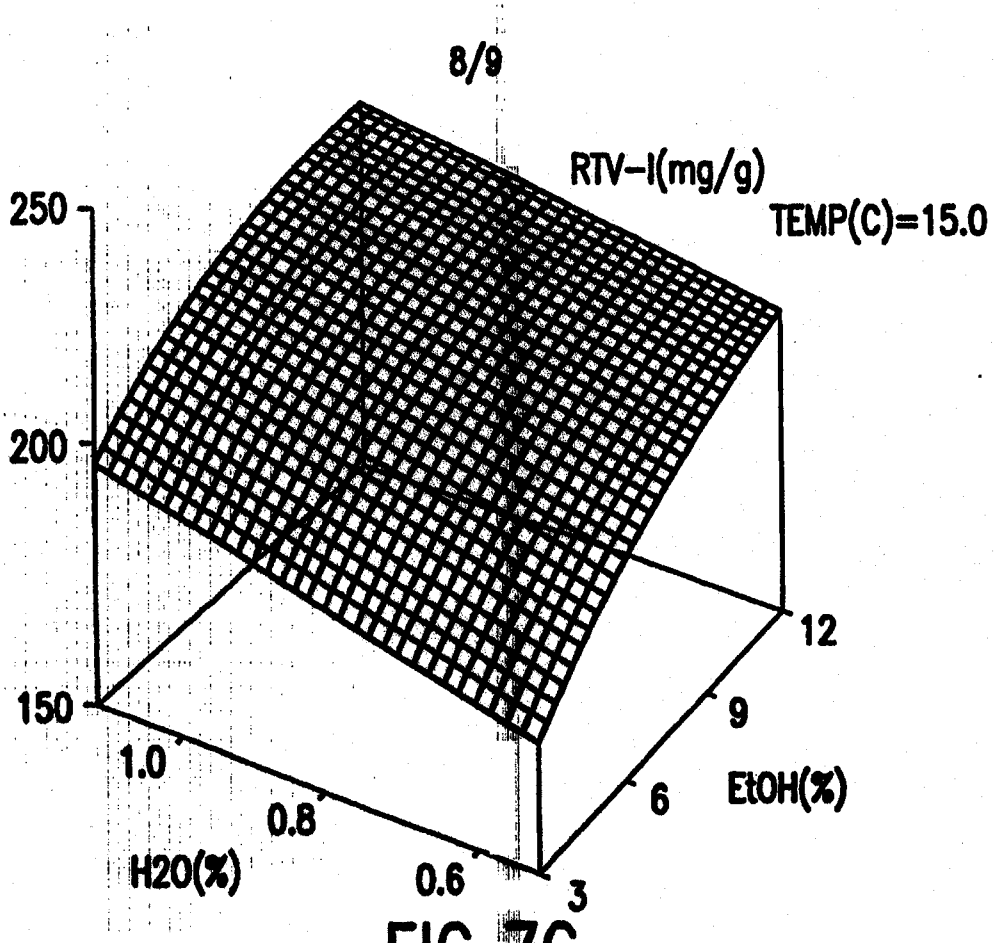
8/9
RTV-I(mg/g)
TEMP(C)=15.0
250
200
150
1.0
0.8
0.6
H2O(%)
3
6
9
12
EtOH(%)

FIG. 7C

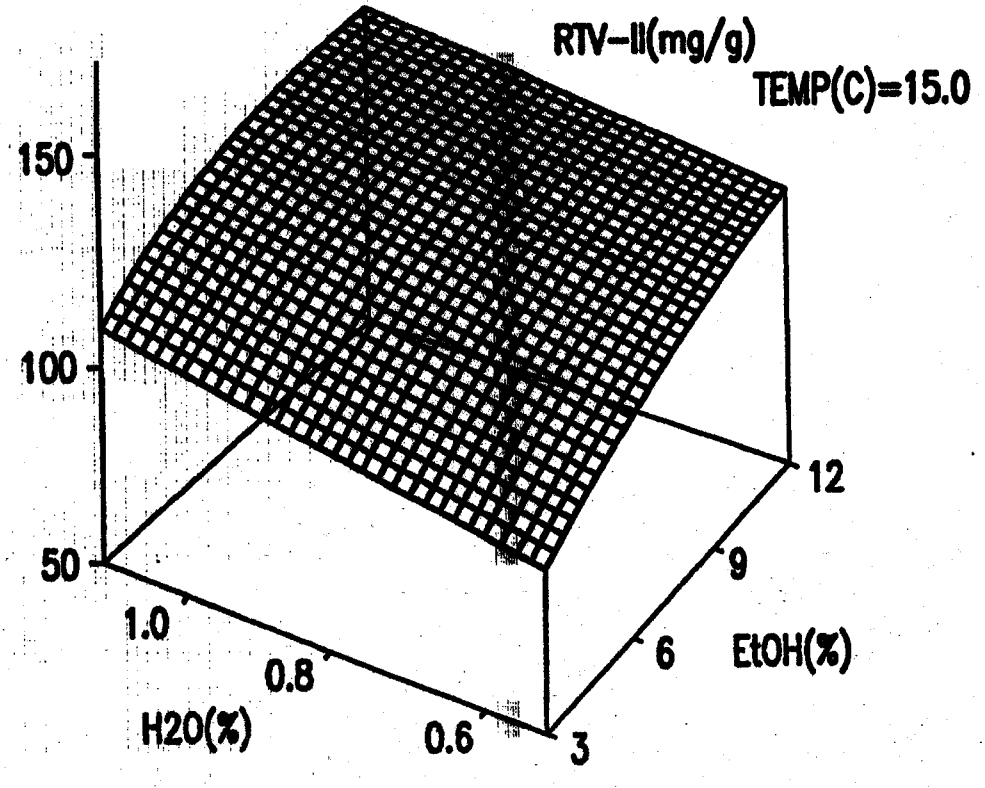
RTV-II(mg/g)
TEMP(C)=15.0
150
100
50
1.0
0.8
0.6
H2O(%)
3
6
9
12
EtOH(%)

FIG. 7D

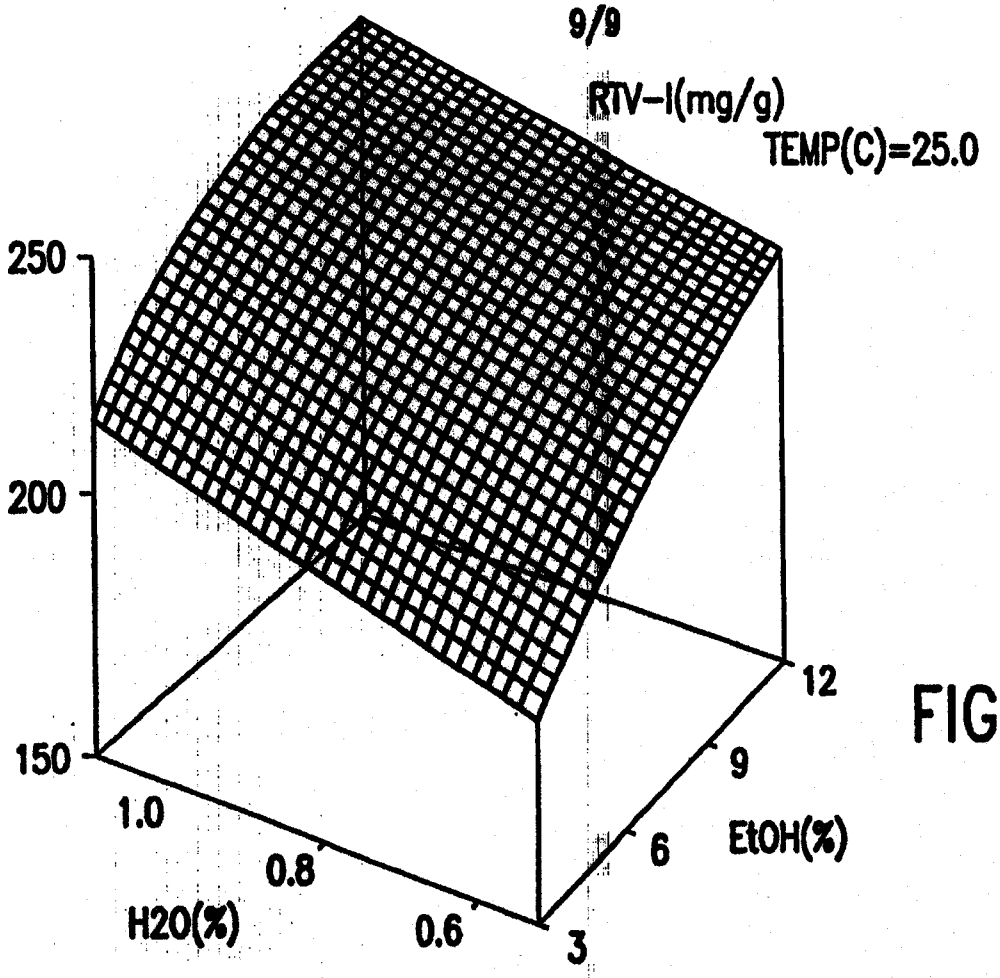
RTV-I(mg/g)
TEMP(C)=25.0
250
200
150
1.0
0.8
0.6
H2O(%)
3
6
9
12
EtOH(%)

FIG. 7E

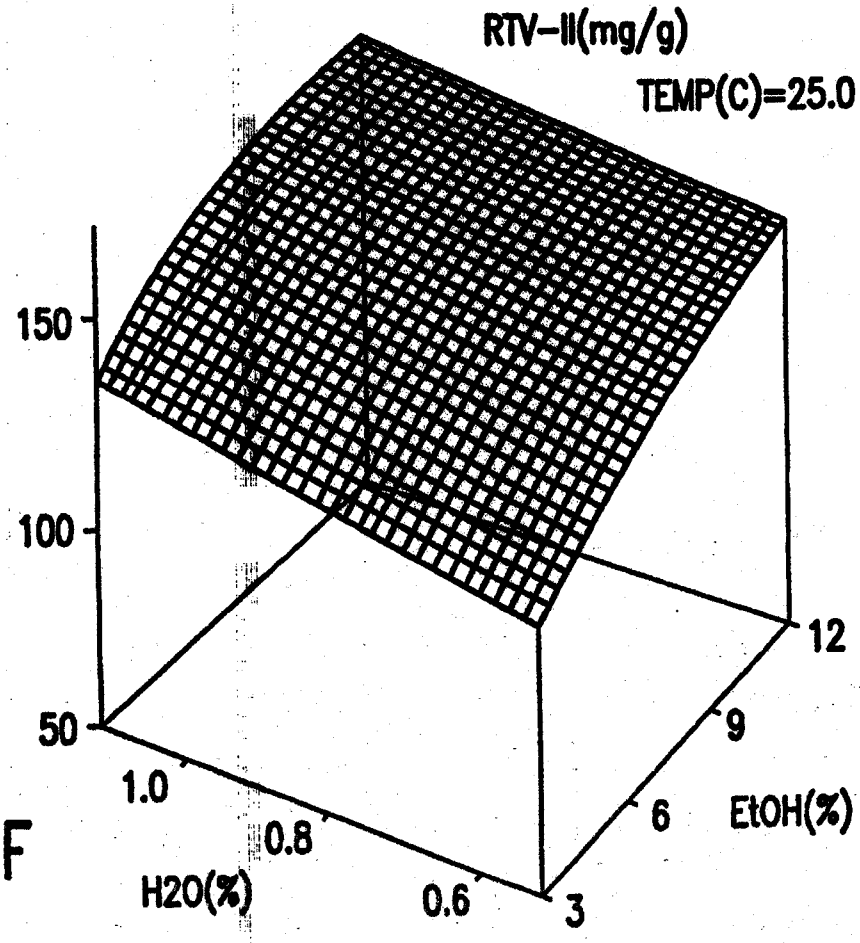
RTV-II(mg/g)
TEMP(C)=25.0
150
100
50
1.0
0.8
0.6
H2O(%)
3
6
9
12
EtOH(%)

FIG. 7F