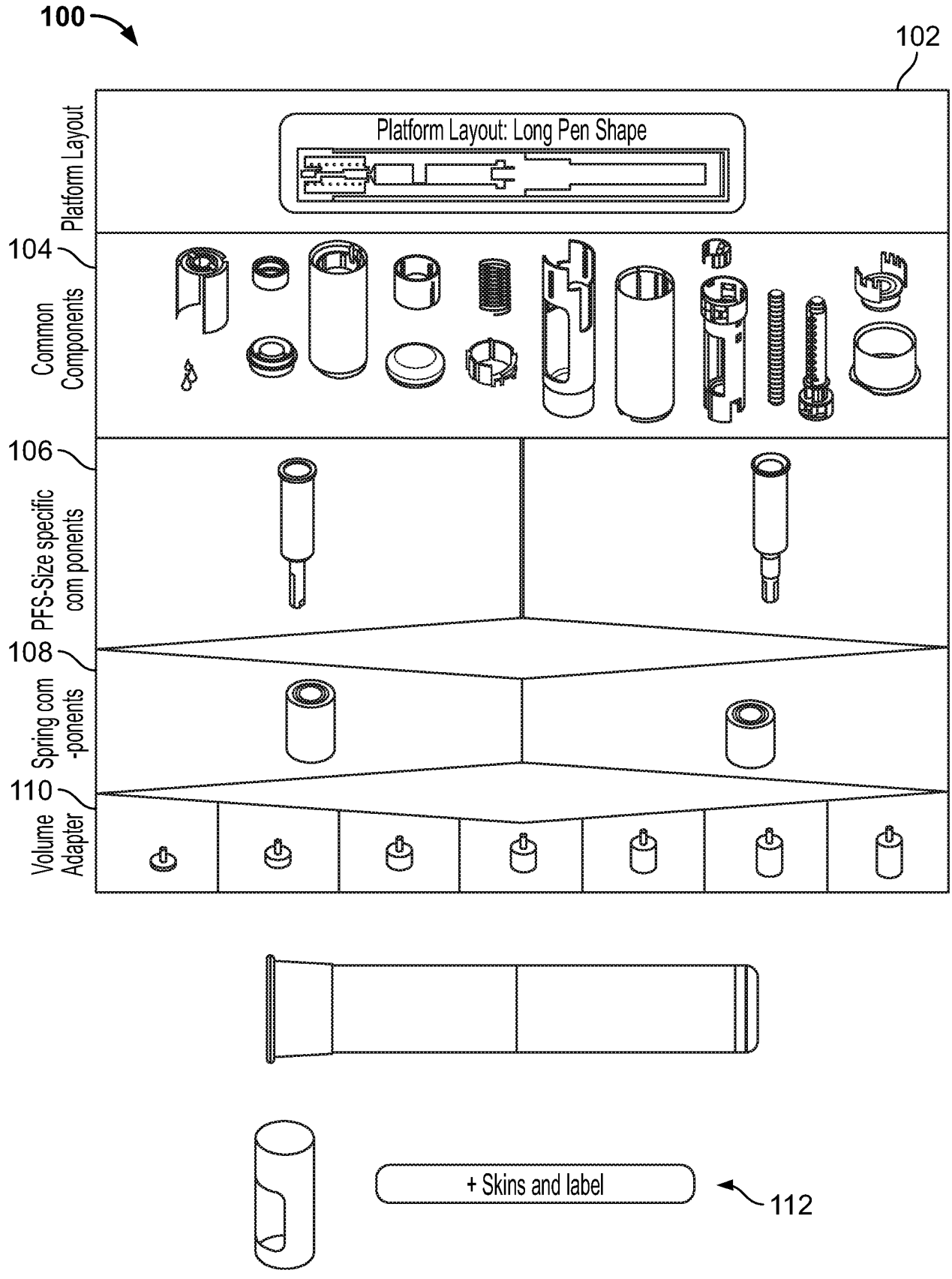
100
102
Platform Layout
Platform Layout: Long Pen Shape
104
Common Components
106
PFS-Size specific com ponents
108
Spring com -ponents
110
Volume Adapter
+ Skins and label
112

FIG. 1

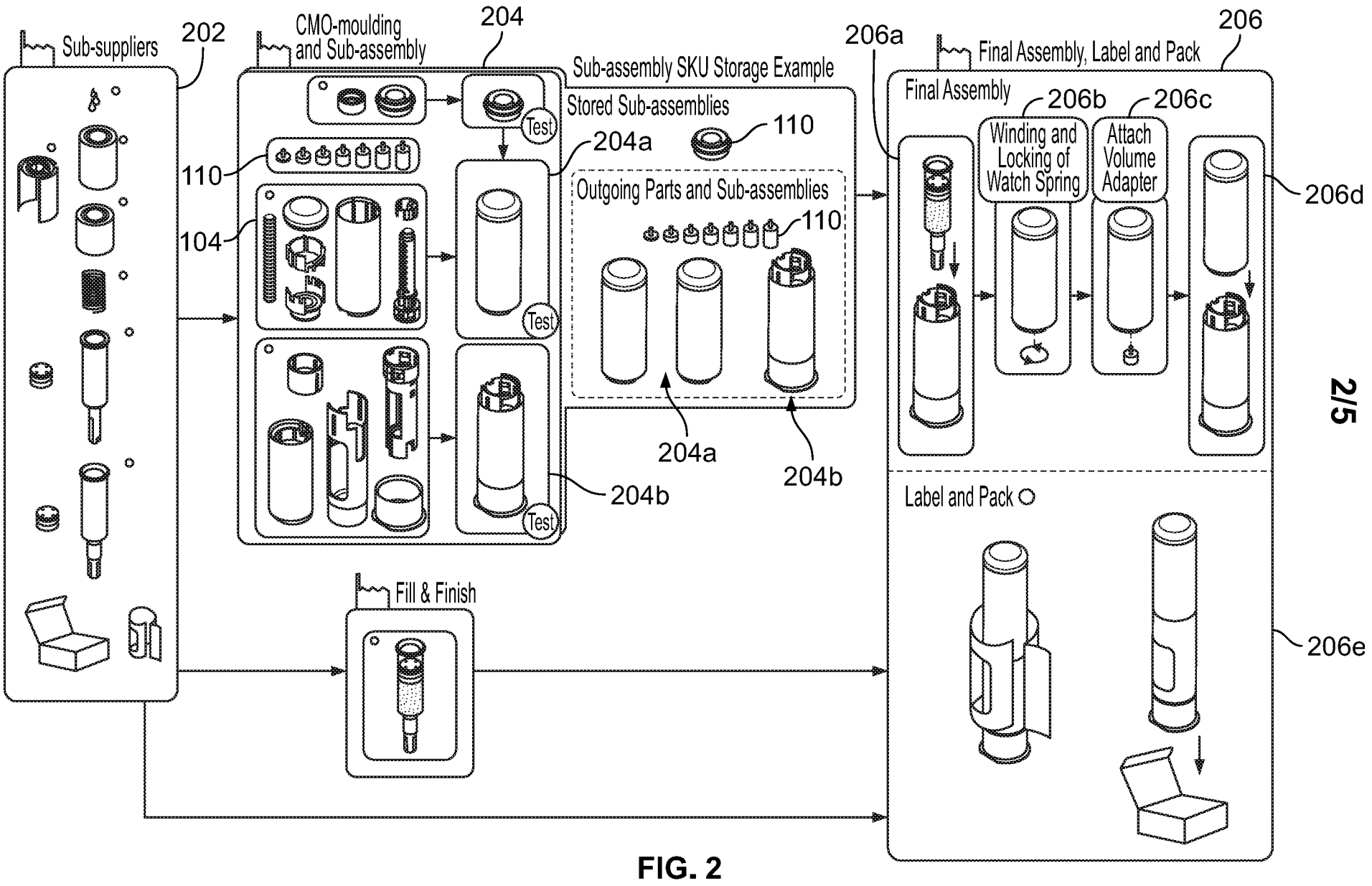
Sub-suppliers
202
CMO-moulding and Sub-assembly
204
Sub-assembly SKU Storage Example
Stored Sub-assemblies
110
204a
Outgoing Parts and Sub-assemblies
110
204a
204b
204b
Test
Test
Test
110
104
206a
Final Assembly, Label and Pack
206
Final Assembly
206b
206c
Winding and Locking of Watch Spring
Attach Volume Adapter
206d
Label and Pack
206e
Fill & Finish

FIG. 2

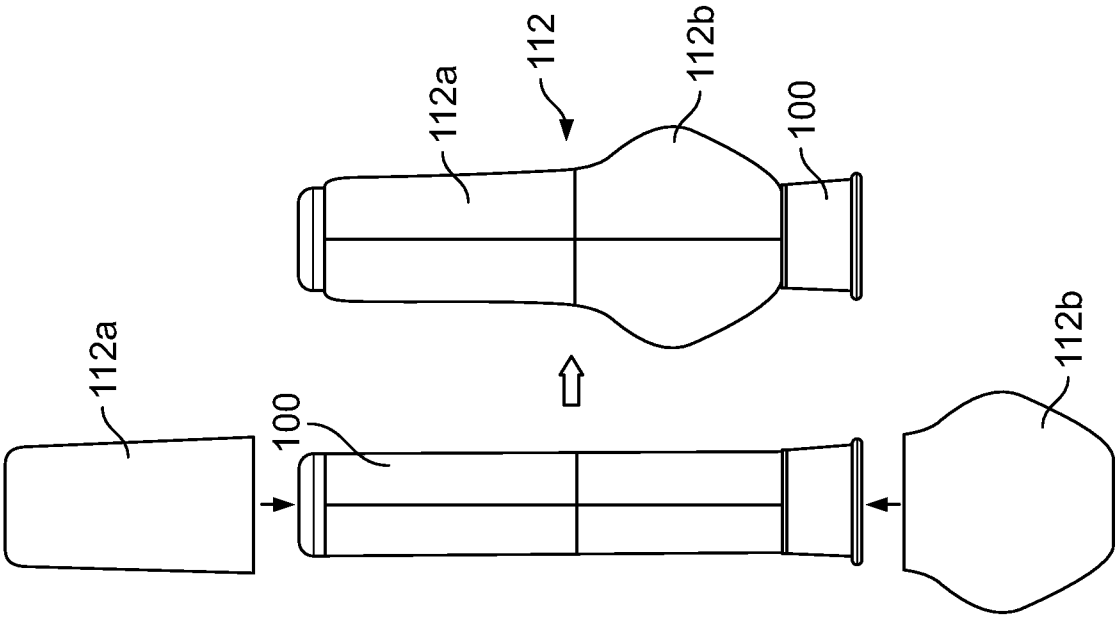

FIG. 4

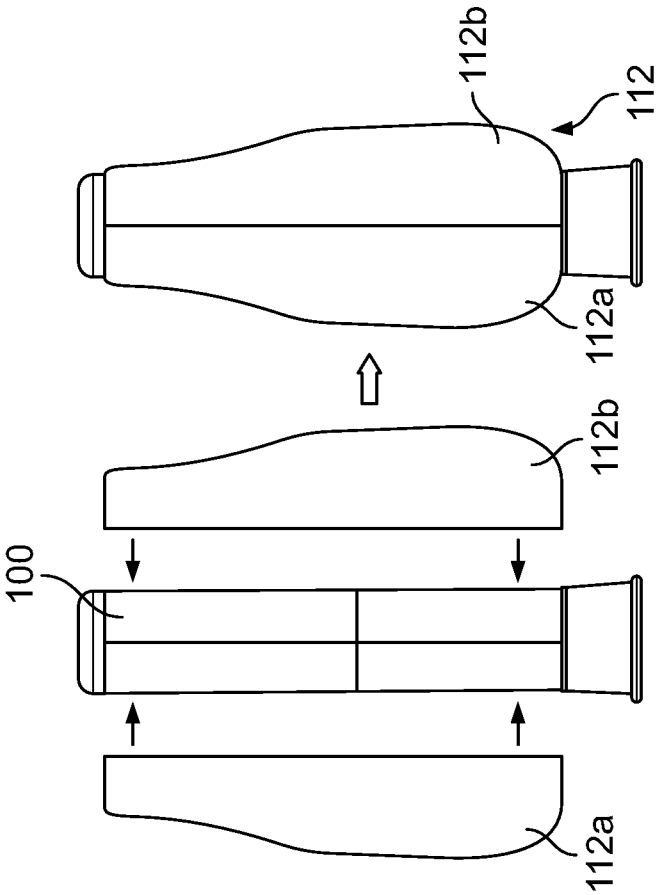

FIG. 3

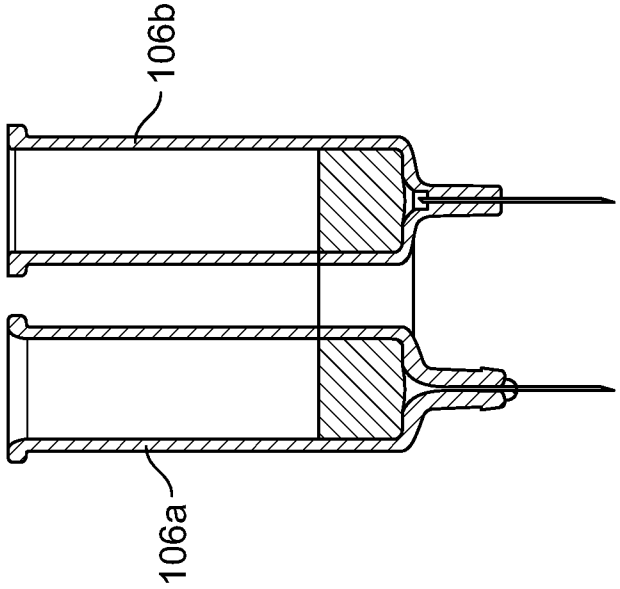

FIG. 5

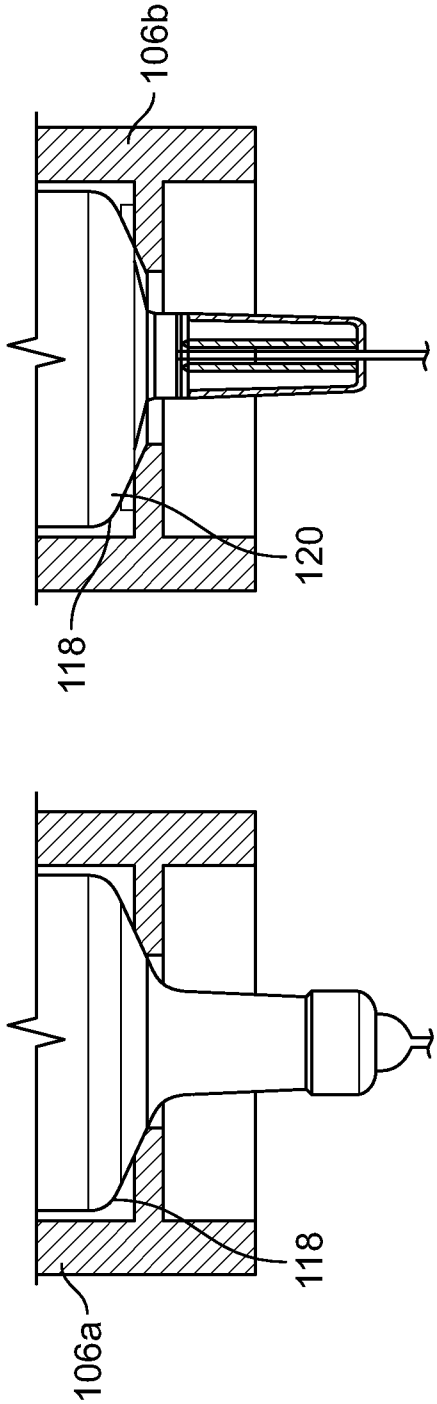

FIG. 6

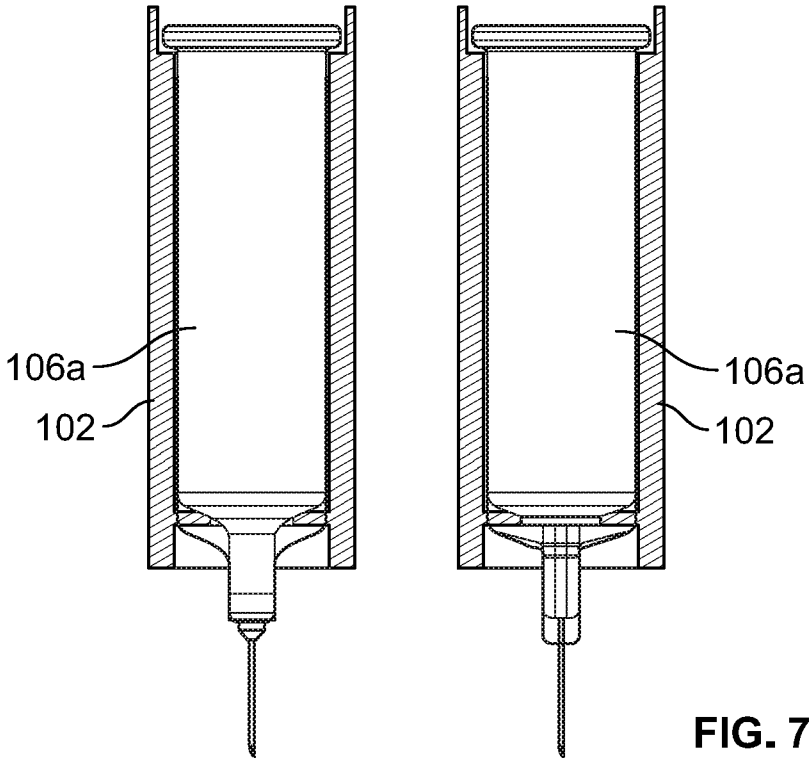

FIG. 7

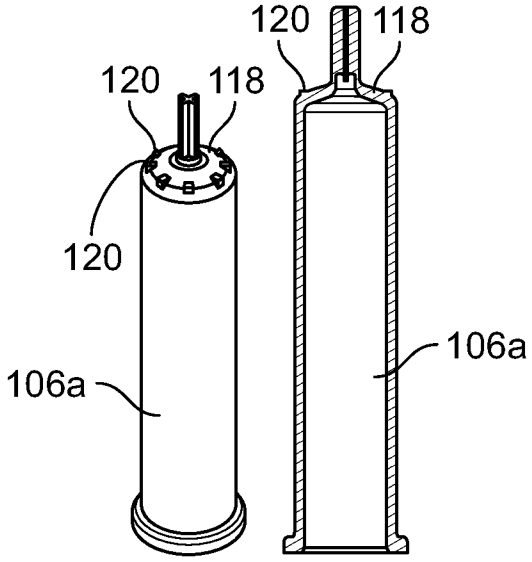

FIG. 8a FIG. 8b

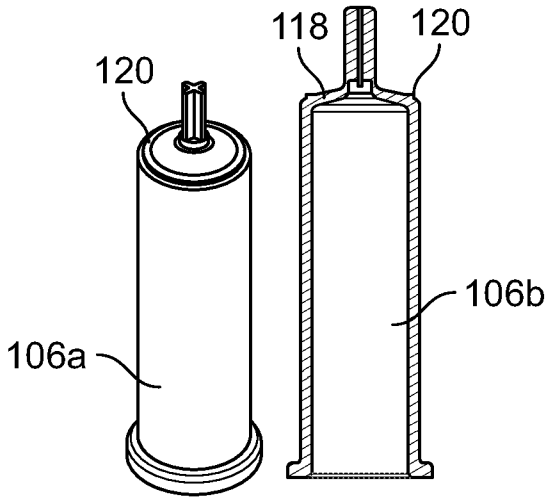

FIG. 9a FIG. 9b

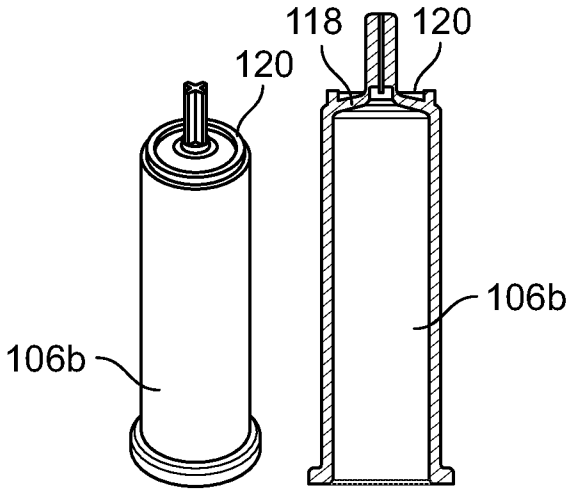

FIG. 10a FIG. 10b