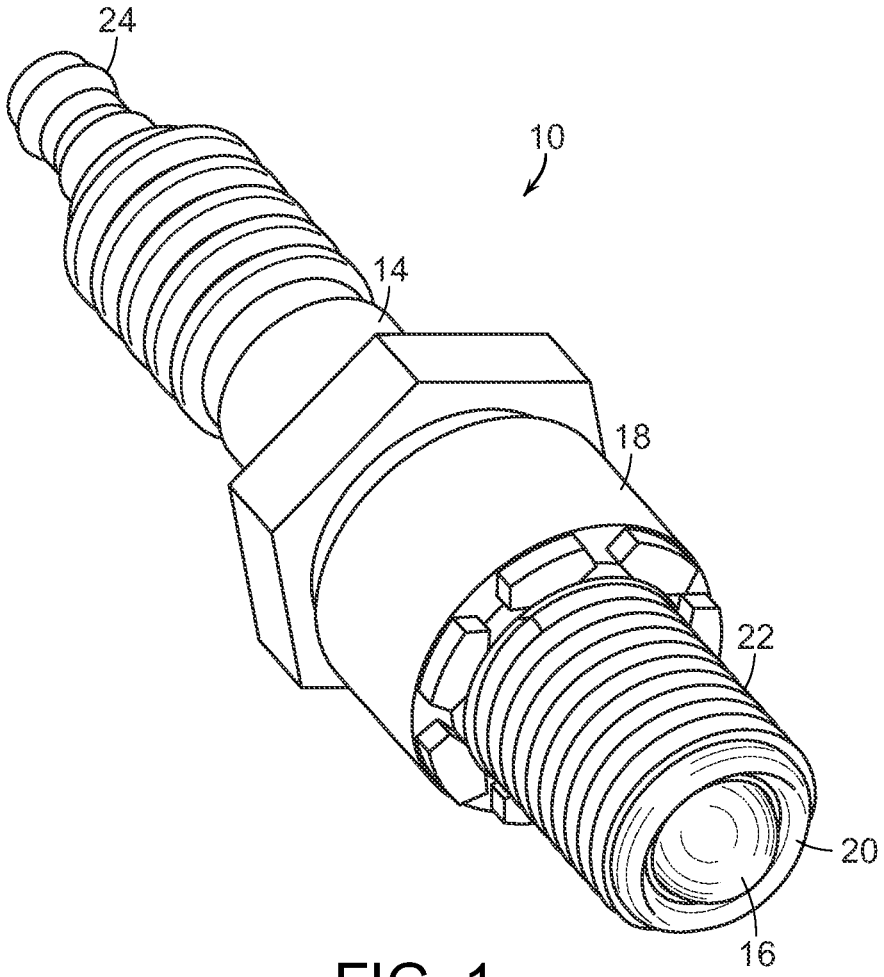

FIG. 1

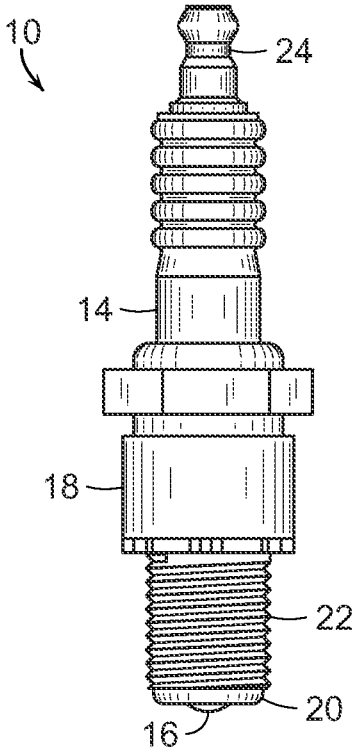

FIG. 2

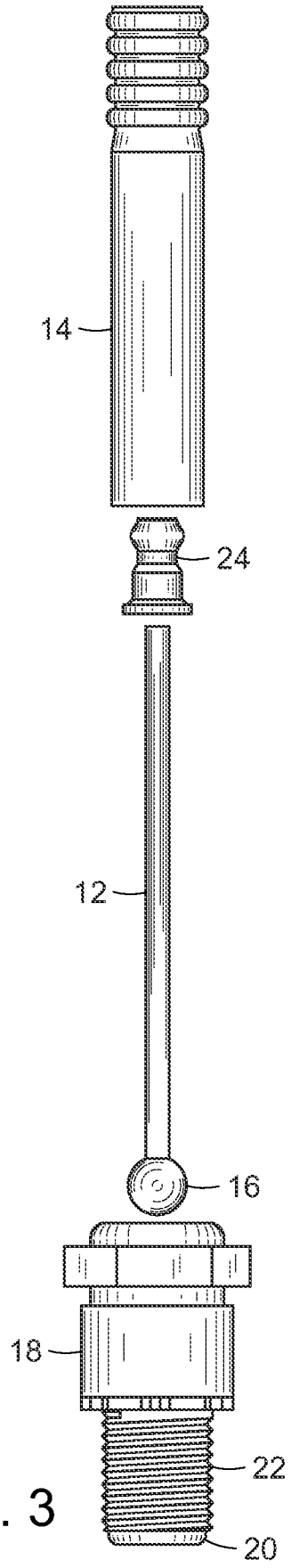

FIG. 3

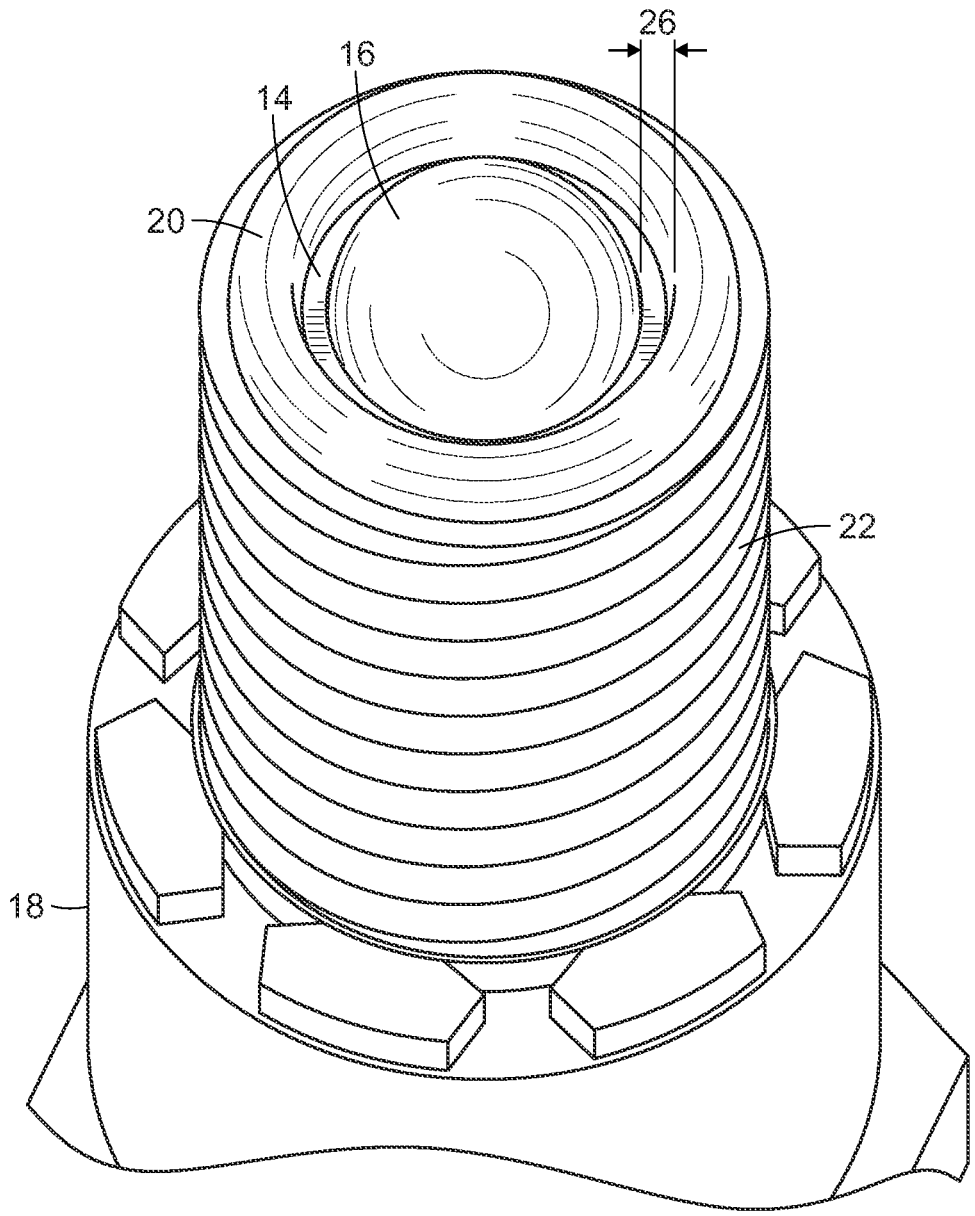

FIG. 4

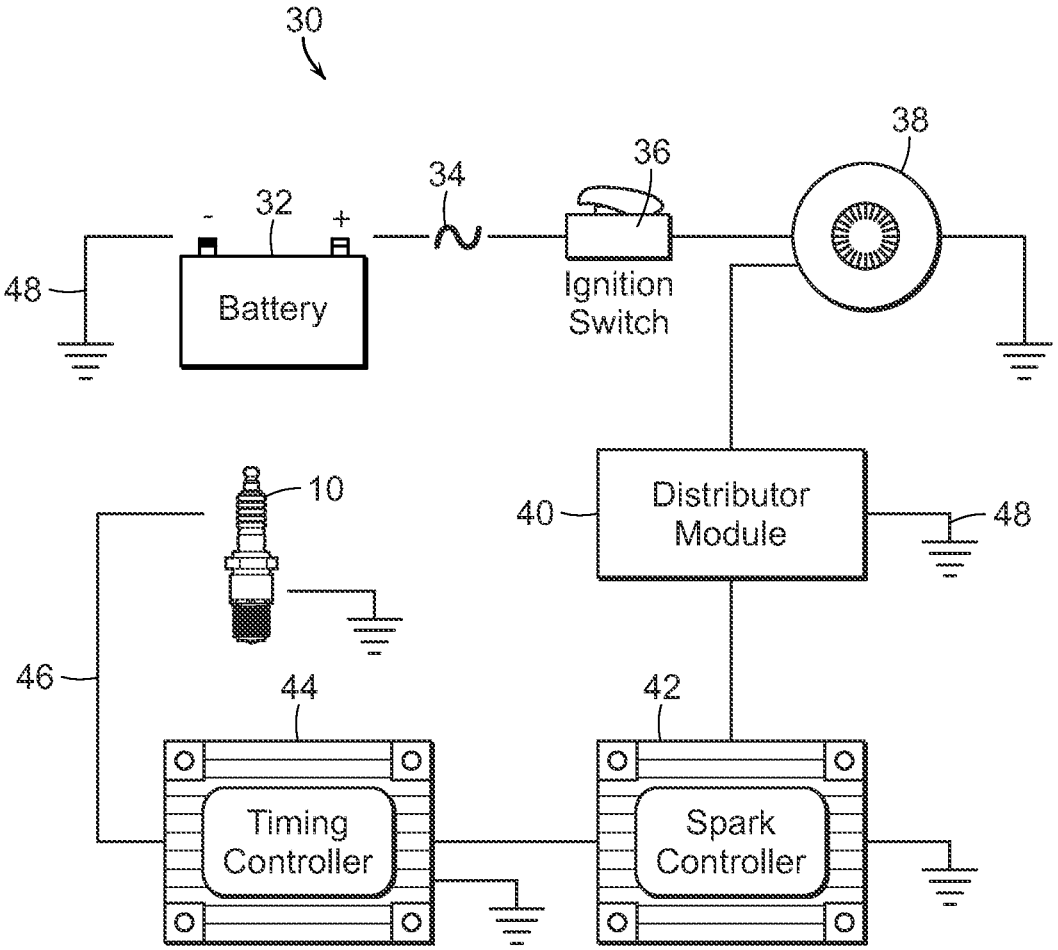
30
38
36
34
32
-
+
48
Battery
Ignition
Switch
10
40
Distributor
Module
48
46
44
42
Timing
Controller
Spark
Controller

FIG. 5

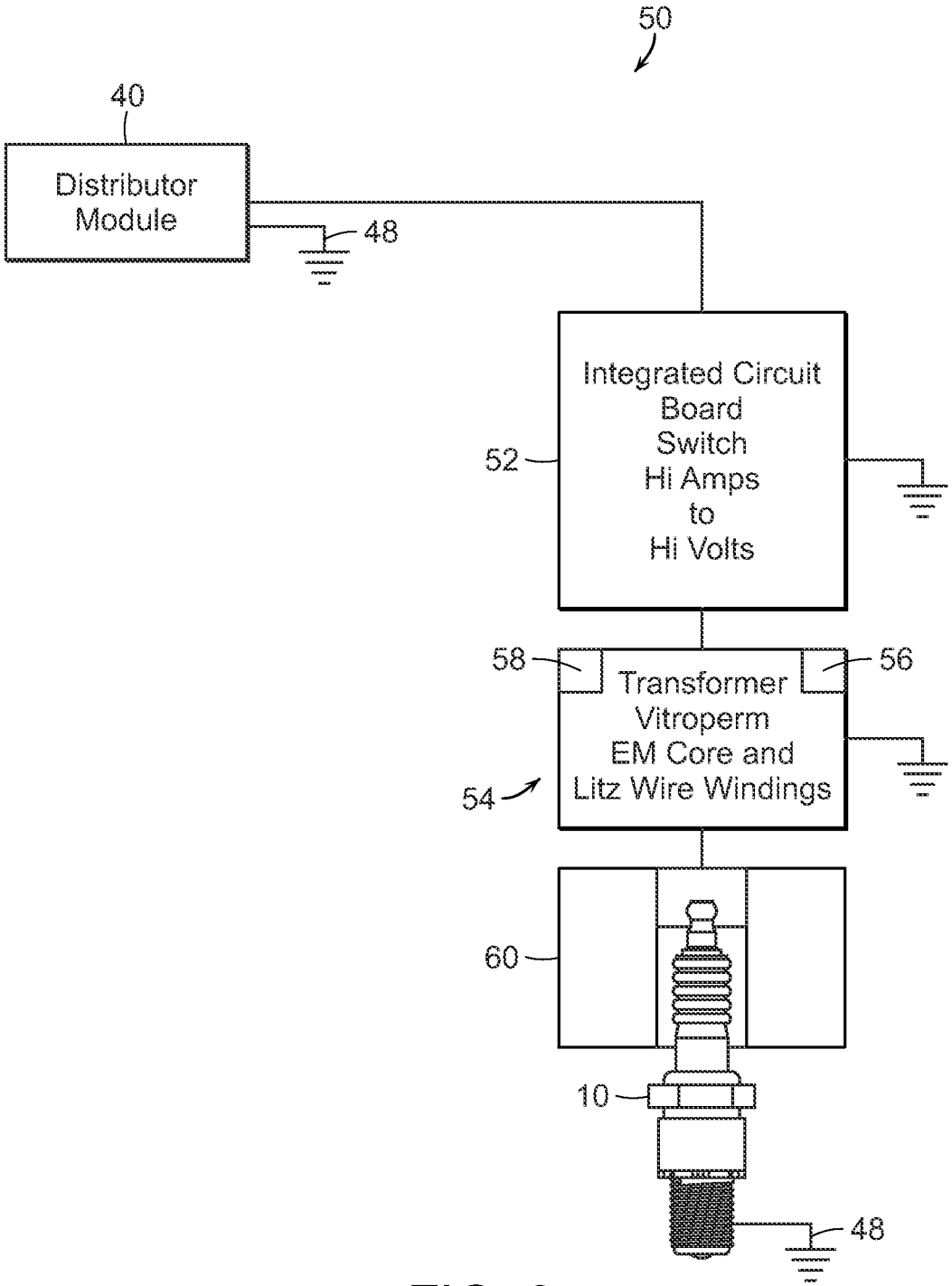
50
40
Distributor Module
48
Integrated Circuit Board Switch Hi Amps to Hi Volts
52
58
56
Transformer Vitroperm EM Core and Litz Wire Windings
54
60
10
48

FIG. 6

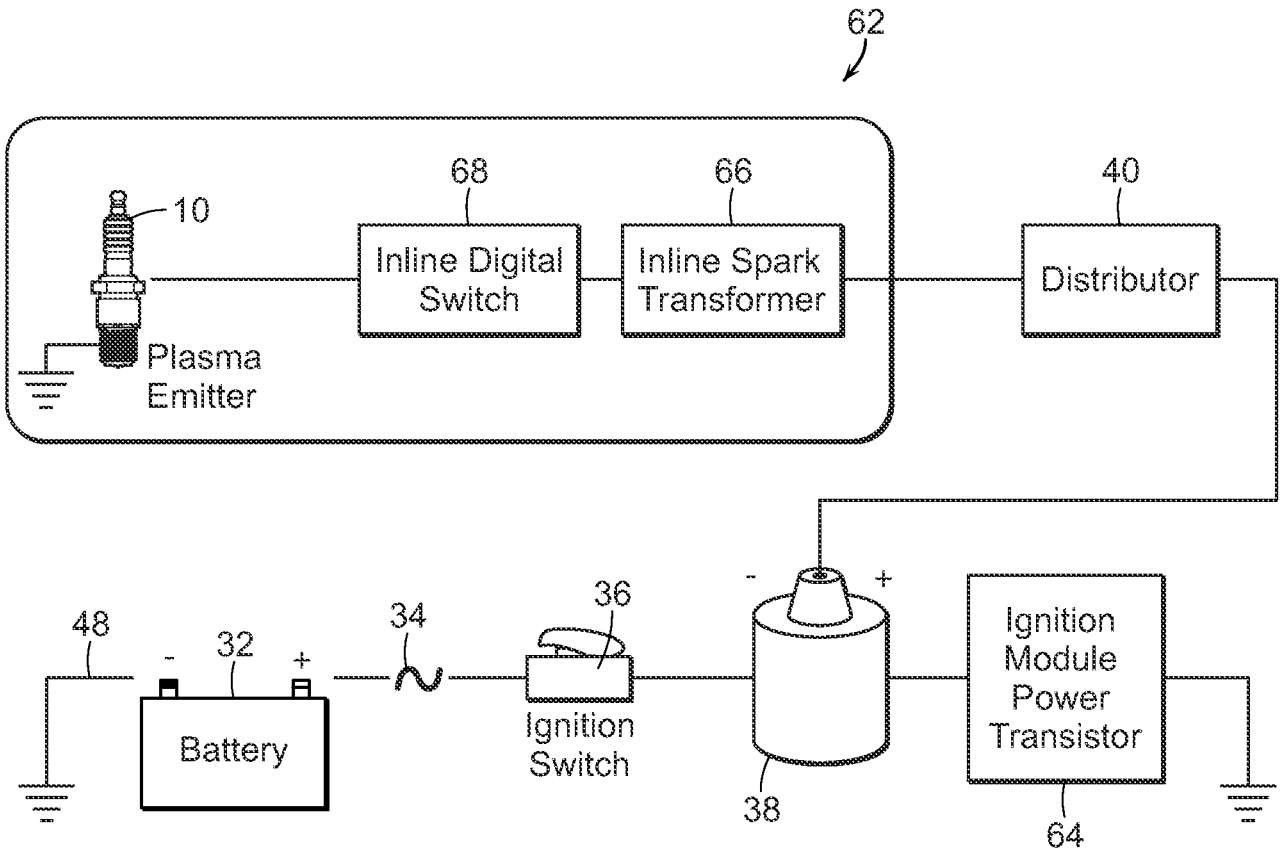
62
10
68
66
40
Inline Digital Switch
Inline Spark Transformer
Distributor
Plasma Emitter
48
32
34
36
Battery
Ignition Switch
38
Ignition Module Power Transistor
64

FIG. 7