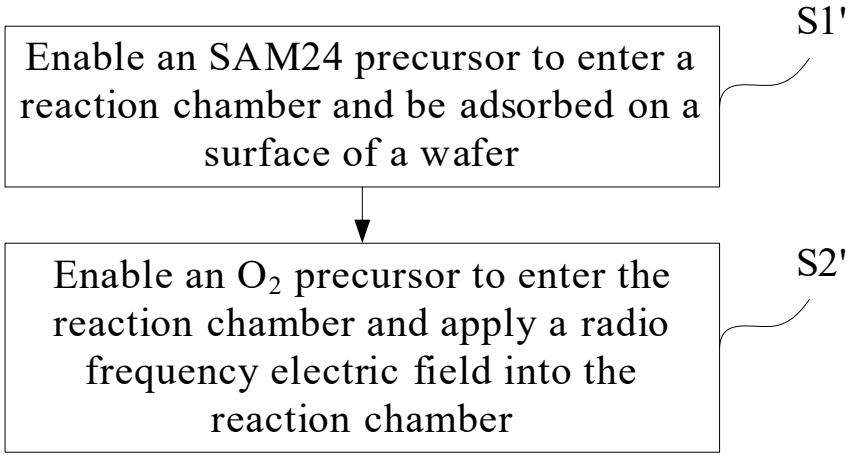
S1'
Enable an SAM24 precursor to enter a reaction chamber and be adsorbed on a surface of a wafer
S2'
Enable an $O_2$ precursor to enter the reaction chamber and apply a radio frequency electric field into the reaction chamber

Fig. 1

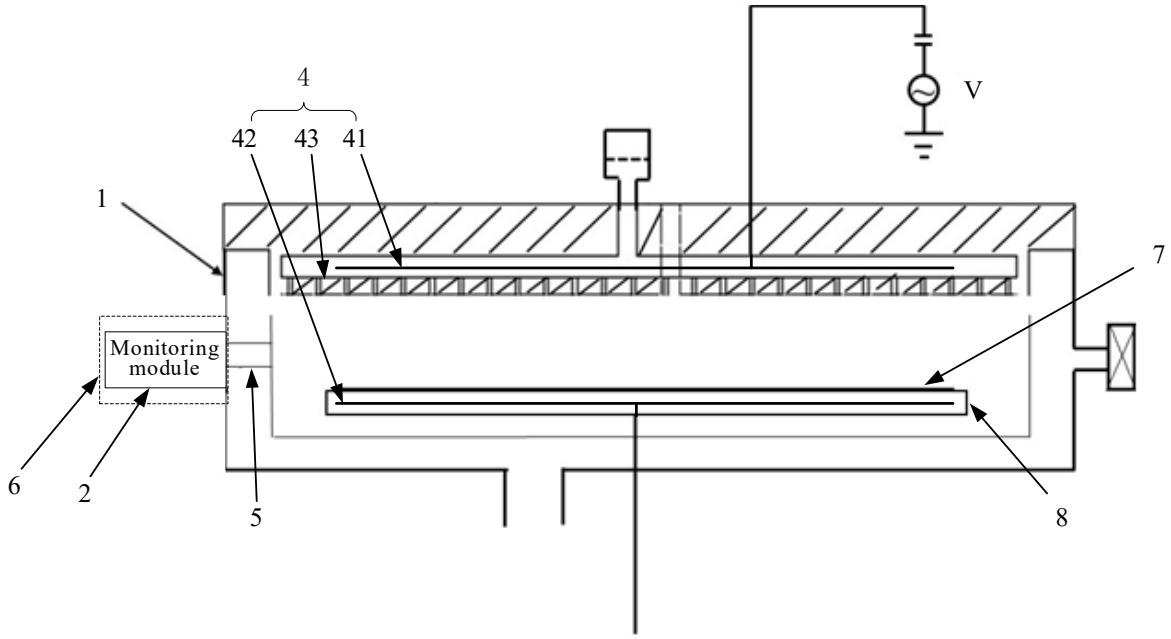
4
42
43
41
V
1
7
Monitoring module
6
2
5
8

Fig. 2