(12) INTERNATIONAL APPLICATION PUBLISHED UNDER THE PATENT COOPERATION TREATY (PCT)

(19) World Intellectual Property Organization
International Bureau

(43) International Publication Date
9 September 2011 (09.09.2011)

PCT

(10) International Publication Number
WO 2011/107986 A2

(51) International Patent Classification:
B01D 29/11 (2006.01)

(21) International Application Number:
PCT/IL2011/000205

(22) International Filing Date:
1 March 2011 (01.03.2011)

(25) Filing Language: English

(26) Publication Language: English

(30) Priority Data:
61/309,085 1 March 2010 (01.03.2010) US

(71) Applicant *(for all designated States except US)*: **AMIAD FILTRATION SYSTEMS LTD.** [IL/IL]; Kibbutz Amiad, 12335 D.N. Upper Galil 1 (IL).

(72) Inventors; and
(75) Inventors/Applicants *(for US only)*: **ZUR, Boaz** [IL/IL]; Kibbutz Parod, 20110 DN Bikat Beit Hakerem (IL). **NURIEL, Shahar** [IL/IL]; 38 Hamezach Street, 12105 Yesud HaMa'ala (IL). **SHTEKELMACHER, Ruven** [IL/IL]; Kibbutz Amiad, 12335 D.N. Upper Gallilee 1 (IL). **SABAG, Yitzhak** [IL/IL]; 30 Bnei Tzfat Street, 12320 Mishmar Hayarden (IL). **KOTLER, Ami** [IL/IL]; 13 Hakalanit Street, 10292 Metula (IL). **SHRAER, Simeon** [IL/IL]; 17/7 Hatavor Street, 13200 Tzfat (IL). **SHAMIR, Yuval** [IL/IL]; Kibbutz Hagoshrim, 12225 D.N. Upper Gallilee (IL).

(74) Agent: **REINHOLD COHN AND PARTNERS**; P.O. Box 13239, 61131 Tel Aviv (IL).

(81) Designated States *(unless otherwise indicated, for every kind of national protection available)*: AE, AG, AL, AM, AO, AT, AU, AZ, BA, BB, BG, BH, BR, BW, BY, BZ, CA, CH, CL, CN, CO, CR, CU, CZ, DE, DK, DM, DO, DZ, EC, EE, EG, ES, FI, GB, GD, GE, GH, GM, GT, HN, HR, HU, ID, IL, IN, IS, JP, KE, KG, KM, KN, KP, KR, KZ, LA, LC, LK, LR, LS, LT, LU, LY, MA, MD, ME, MG, MK, MN, MW, MX, MY, MZ, NA, NG, NI, NO, NZ, OM, PE, PG, PH, PL, PT, RO, RS, RU, SC, SD, SE, SG, SK, SL, SM, ST, SV, SY, TH, TJ, TM, TN, TR, TT, TZ, UA, UG, US, UZ, VC, VN, ZA, ZM, ZW.

(84) Designated States *(unless otherwise indicated, for every kind of regional protection available)*: ARIPO (BW, GH, GM, KE, LR, LS, MW, MZ, NA, SD, SL, SZ, TZ, UG, ZM, ZW), Eurasian (AM, AZ, BY, KG, KZ, MD, RU, TJ, TM), European (AL, AT, BE, BG, CH, CY, CZ, DE, DK,

[Continued on next page]

(54) Title: FILTERING ELEMENT AND METHOD FOR ITS MANUFACTURE

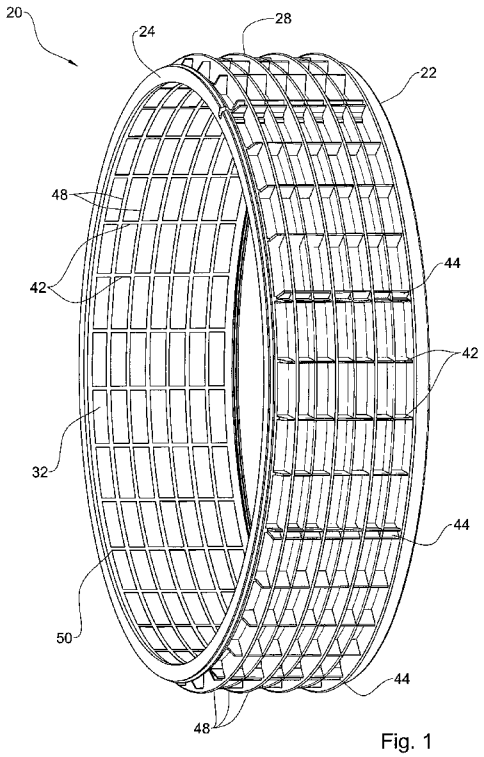

Fig. 1

(57) Abstract: The disclosed subject matter is concerned with a screen-type filter element, and a method for its manufacture. The screen type filter comprises a substantially rigid screen-bearing skeleton and at least one fine screen sheet material extending within or over the skeleton and secured thereto by a plurality of enveloping ribs, the enveloping ribs being applied over one face of the filter screen sheet to thereby support it at discrete portions and secure it to the skeleton.

WO 2011/107986 A2

EE, ES, FI, FR, GB, GR, HR, HU, IE, IS, IT, LT, LU, LV, MC, MK, MT, NL, NO, PL, PT, RO, RS, SE, SI, SK, SM, TR), OAPI (BF, BJ, CF, CG, CI, CM, GA, GN, GQ, GW, ML, MR, NE, SN, TD, TG).

Declarations under Rule 4.17:

— *as to applicant's entitlement to apply for and be granted a patent (Rule 4.17(ii))*

— *as to the applicant's entitlement to claim the priority of the earlier application (Rule 4.17(iii))*

— *of inventorship (Rule 4.17(iv))*

Published:

— *without international search report and to be republished upon receipt of that report (Rule 48.2(g))*