(12) INTERNATIONAL APPLICATION PUBLISHED UNDER THE PATENT COOPERATION TREATY (PCT)

(19) World Intellectual Property Organization
International Bureau

(43) International Publication Date
14 August 2025 (14.08.2025)

WIPO | PCT

(10) International Publication Number
WO 2025/168916 A1

(51) International Patent Classification:
B60N 2/06 (2006.01) *B60N 2/08* (2006.01)

(21) International Application Number:
PCT/GB2025/050166

(22) International Filing Date:
29 January 2025 (29.01.2025)

(25) Filing Language: English

(26) Publication Language: English

(30) Priority Data:
2401483.9 05 February 2024 (05.02.2024) GB

(71) Applicant: **NMI SAFETY SYSTEMS LTD** [GB/GB]; 16 IO Centre, Arlington Business Park, Whittle Way, Stevenage Hertfordshire SG1 2BD (GB).

(72) Inventor: **ALFASSA, Ilan**; 16 IO Centre, Arlington Business Park, Whittle Way, Stevenage Hertfordshire SG1 2BD (GB).

(74) Agent: **FORRESTERS IP LLP**; 11th Floor, The Gherkin, 30 St Mary Axe, London Greater London EC3A 8BF (GB).

(81) Designated States *(unless otherwise indicated, for every kind of national protection available)*: AE, AG, AL, AM, AO, AT, AU, AZ, BA, BB, BG, BH, BN, BR, BW, BY, BZ, CA, CH, CL, CN, CO, CR, CU, CV, CZ, DE, DJ, DK, DM, DO, DZ, EC, EE, EG, ES, FI, GB, GD, GE, GH, GM, GT, HN, HR, HU, ID, IL, IN, IQ, IR, IS, IT, JM, JO, JP, KE, KG, KH, KN, KP, KR, KW, KZ, LA, LC, LK, LR, LS, LU, LY, MA, MD, MG, MK, MN, MU, MW, MX, MY, MZ, NA, NG, NI, NO, NZ, OM, PA, PE, PG, PH, PL, PT, QA, RO, RS, RU, RW, SA, SC, SD, SE, SG, SK, SL, ST, SV, SY, TH,

(54) Title: A VEHICLE SEAT

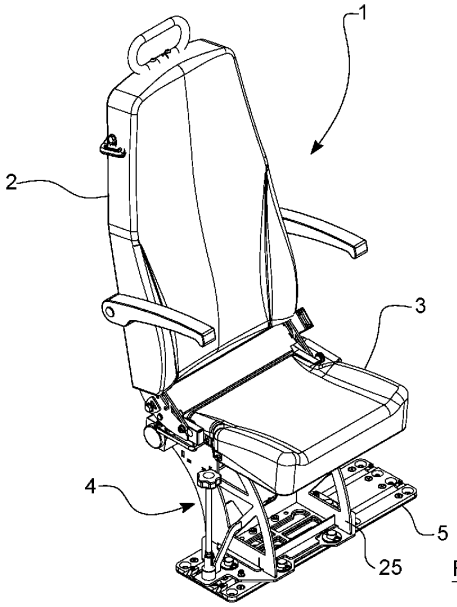

Fig. 1

(57) Abstract: A seating arrangement, comprising: a seat; a floor arrangement, formed as part of a floor surface or adapted to be secured to a floor surface; a base, having an upper end which is adapted to support the seat, and a lower end which is supported by the floor arrangement, such that a top surface of the seat is positioned at a first height with respect to the floor arrangement; a sliding arrangement, allowing translational movement of the seat and base with respect to the floor arrangement; and a locking arrangement, allowing the seat and base to be selectively locked in place with respect to the floor arrangement, such that the translational movement is prevented, the locking arrangement comprising a locking control element, which can manipulated by a user of the seating arrangement to operate the locking arrangements, and wherein the locking control element is positioned such that it can be reached and operated by the hand of an occupant of the seat, while sitting in a normal upright position. Also disclosed is a seating arrangement, comprising: a seat, having a squab and a seat back; a floor arrangement, formed as part of a floor surface or adapted to be secured to a floor surface; a base, having an upper end which is adapted to support the seat, and a lower end which is supported by the floor arrangement, such that a top surface of the seat is positioned at a first height with respect to the floor arrangement; a sliding arrangement, allowing translational movement of the seat and base with respect to the floor arrangement, the sliding arrangement comprising comprises one or more elongate tracks formed in one of the floor arrangement and the base, and one or more cooperating elements, provided on the other one of the floor arrangement and the base, which are adapted to be received within, and slide along, the tracks; and a locking arrangement,

WO 2025/168916 A1

[Continued on next page]

TJ, TM, TN, TR, TT, TZ, UA, UG, US, UY, UZ, VC, VN, WS, ZA, ZM, ZW.

(84) **Designated States** *(unless otherwise indicated, for every kind of regional protection available)*: ARIPO (BW, CV, GH, GM, KE, LR, LS, MW, MZ, NA, RW, SC, SD, SL, ST, SZ, TZ, UG, ZM, ZW), Eurasian (AM, AZ, BY, KG, KZ, RU, TJ, TM), European (AL, AT, BE, BG, CH, CY, CZ, DE, DK, EE, ES, FI, FR, GB, GR, HR, HU, IE, IS, IT, LT, LU, LV, MC, ME, MK, MT, NL, NO, PL, PT, RO, RS, SE, SI, SK, SM, TR), OAPI (BF, BJ, CF, CG, CI, CM, GA, GN, GQ, GW, KM, ML, MR, NE, SN, TD, TG).

Published:

— *with international search report (Art. 21(3))*

allowing the seat and base to be selectively locked in place with respect to the floor arrangement, such that the translational movement is prevented, wherein: the seat defines a forward direction, which is the direction in which an occupant of the seat will face when sitting in the seat in a normal sitting position; the tracks are oriented perpendicular or substantially perpendicular to the forward direction; and a location on a top surface of the squab, which is at least 10cm forward of a point on the front surface of the seat back, at a height on the seat back which is level with the top surface of the squab, is directly above a point which lies between the tracks.