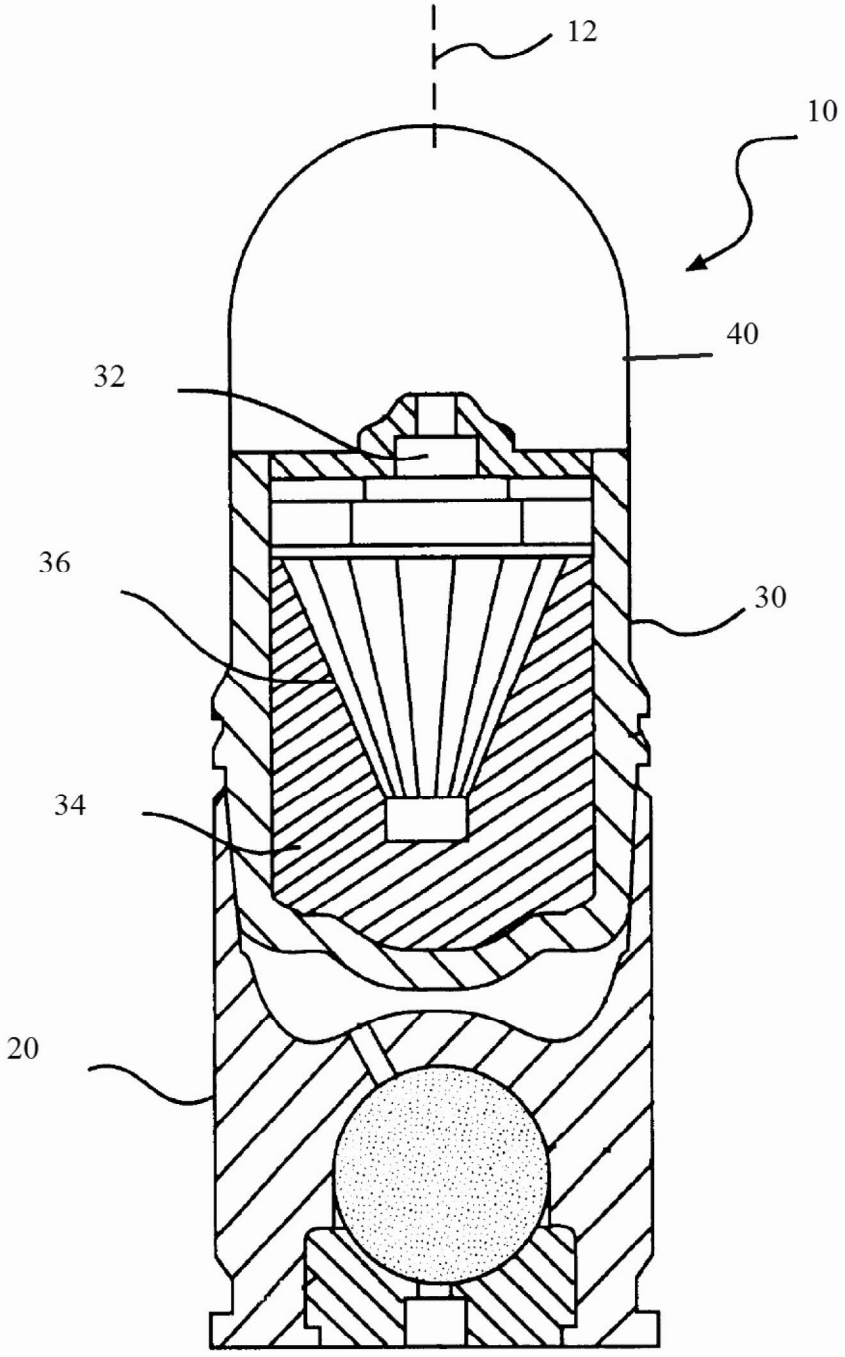

FIG. 1 (PRIOR ART)

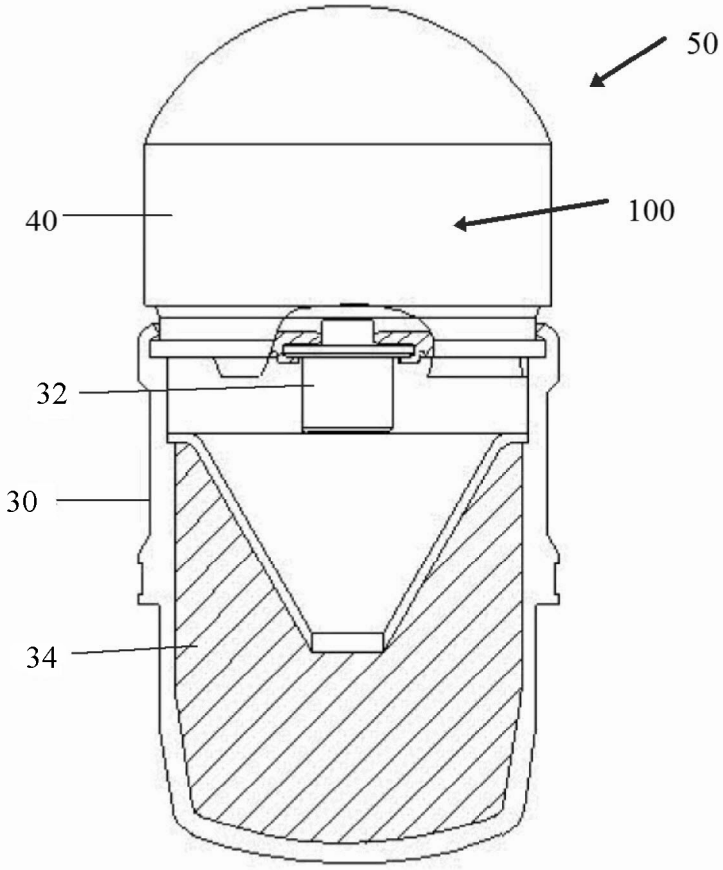

FIG. 2

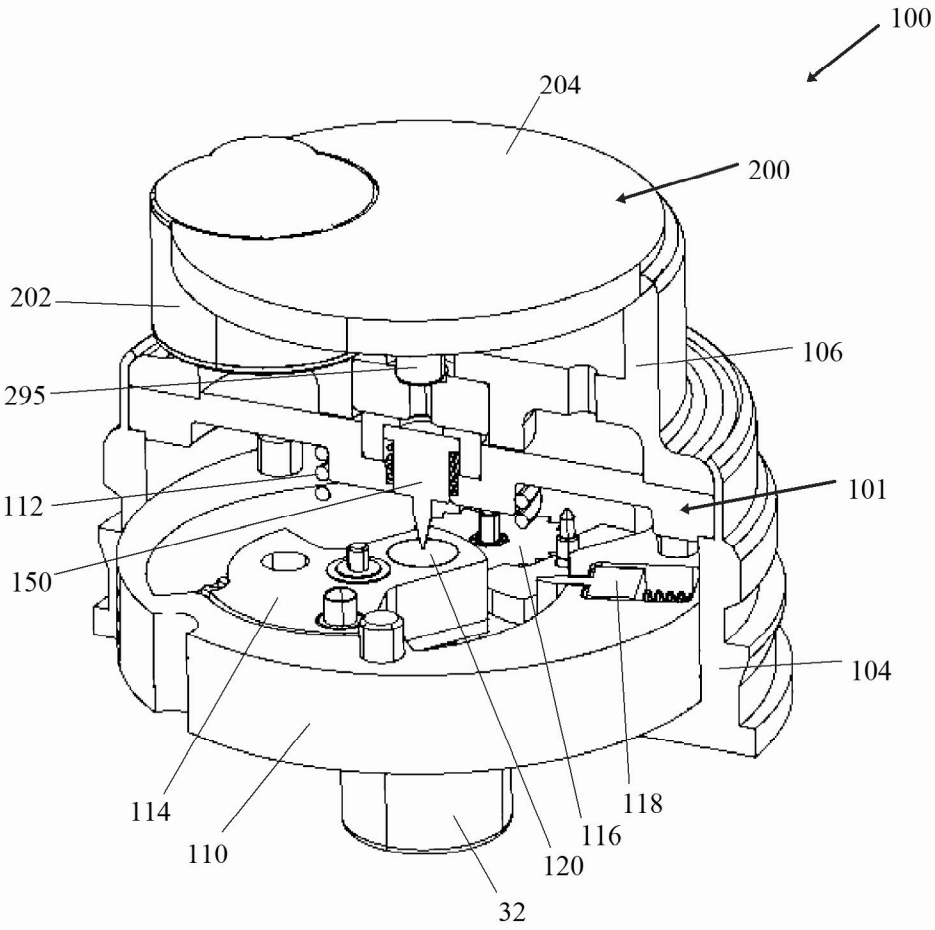
100
204
200
202
106
295
101
112
150
104
114
110
116
118
120
32

FIG. 2A

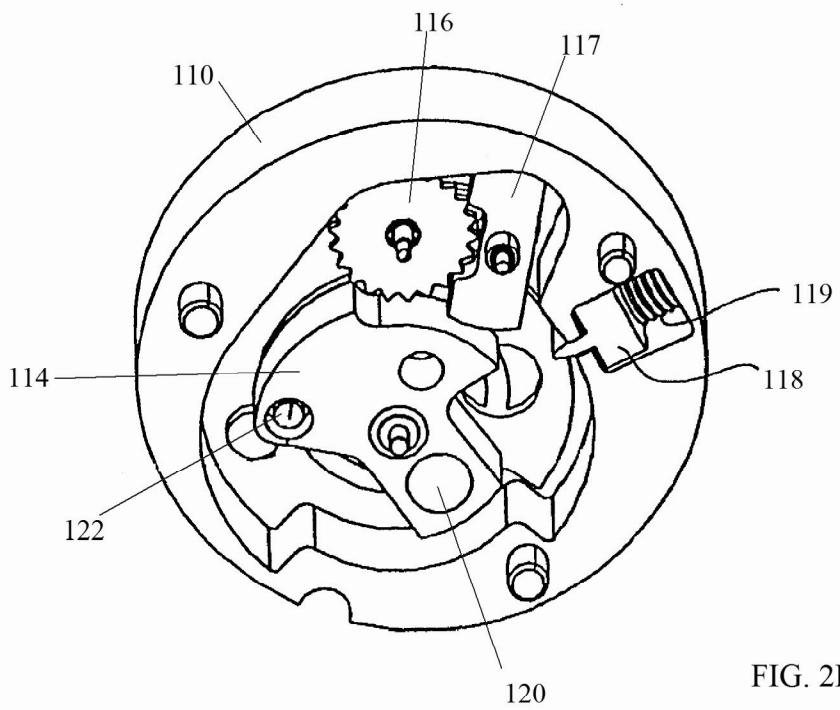
116
117
110
119
114
118
122
120

FIG. 2B

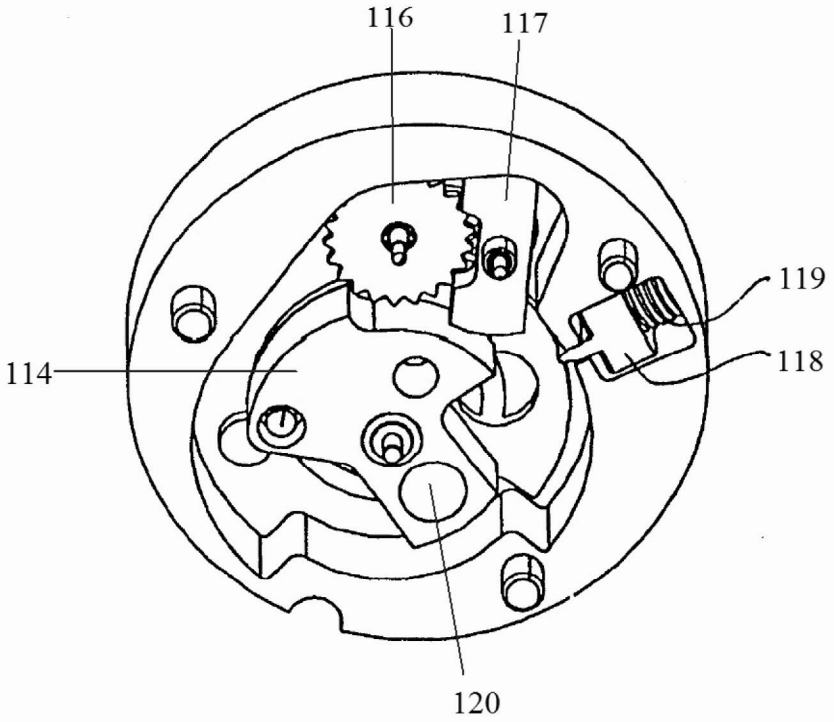

FIG. 2C

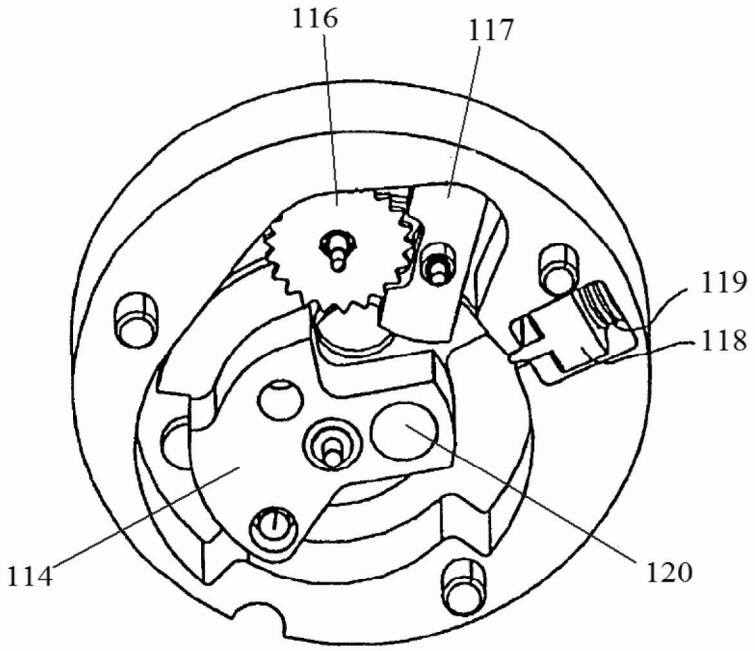

FIG. 2D

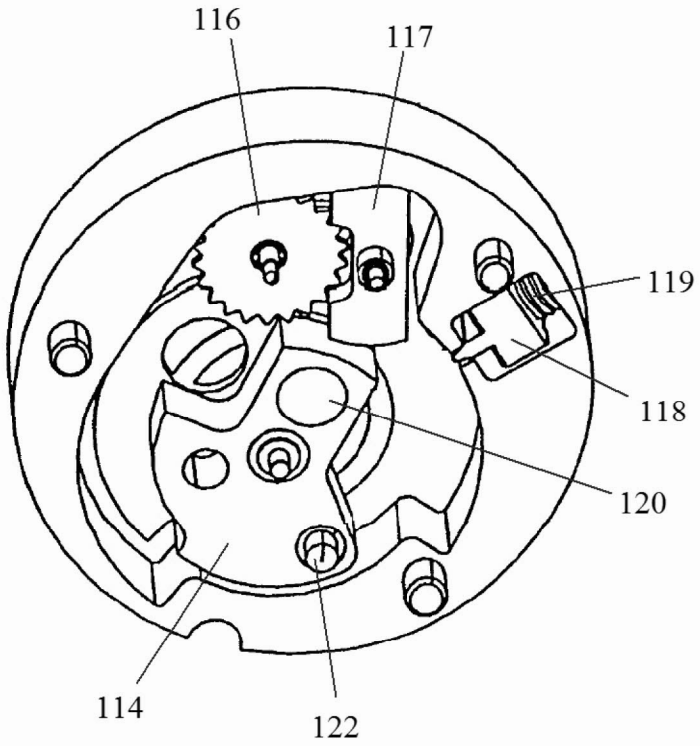

FIG. 2E

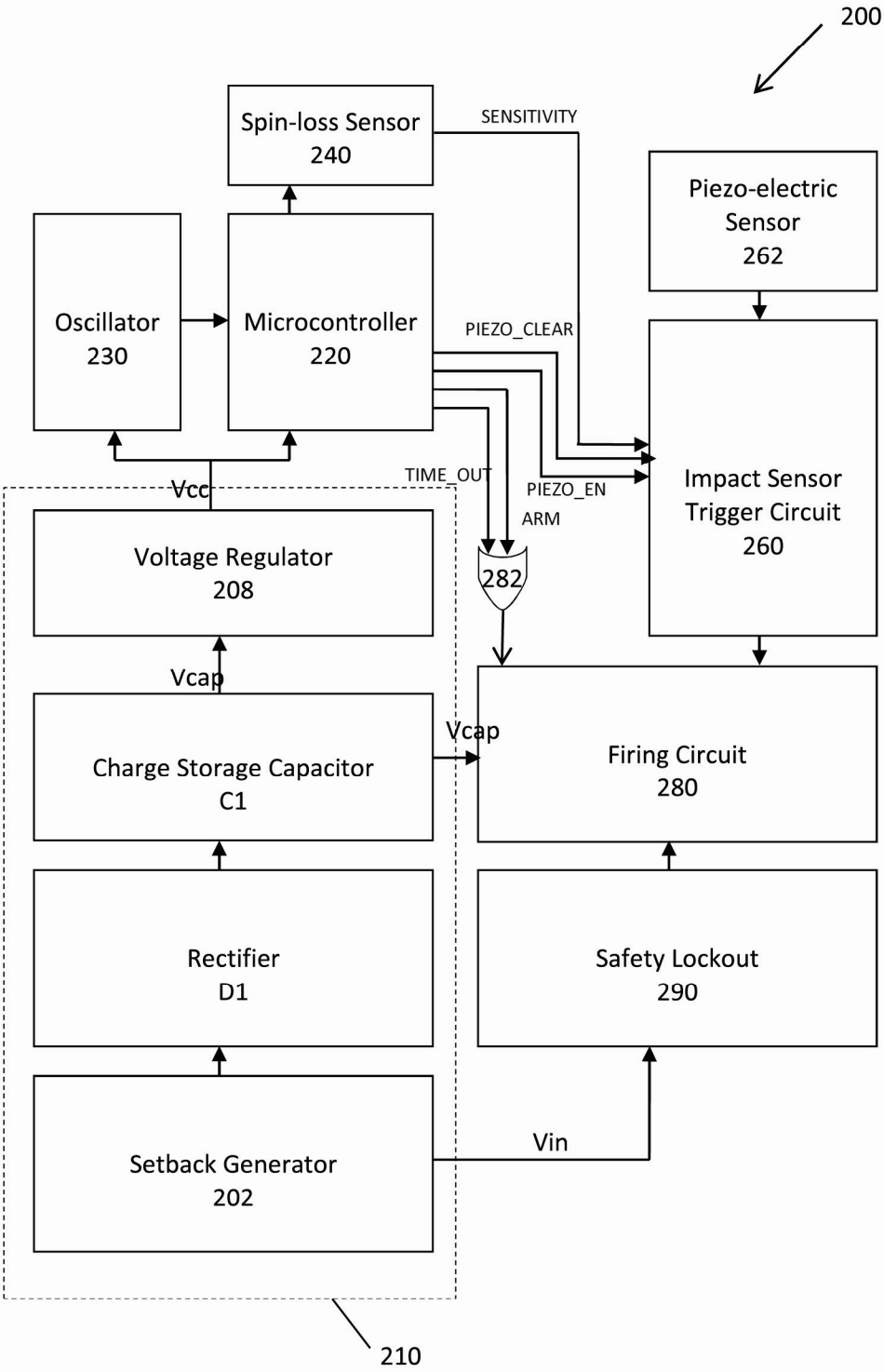
200
Spin-loss Sensor
240
SENSITIVITY
Piezo-electric
Sensor
262
Oscillator
230
Microcontroller
220
PIEZO_CLEAR
Impact Sensor
Trigger Circuit
260
TIME_OUT
PIEZO_EN
ARM
Vcc
Voltage Regulator
208
282
Vcap
Vcap
Charge Storage Capacitor
C1
Firing Circuit
280
Rectifier
D1
Safety Lockout
290
Setback Generator
202
Vin
210

FIG. 3

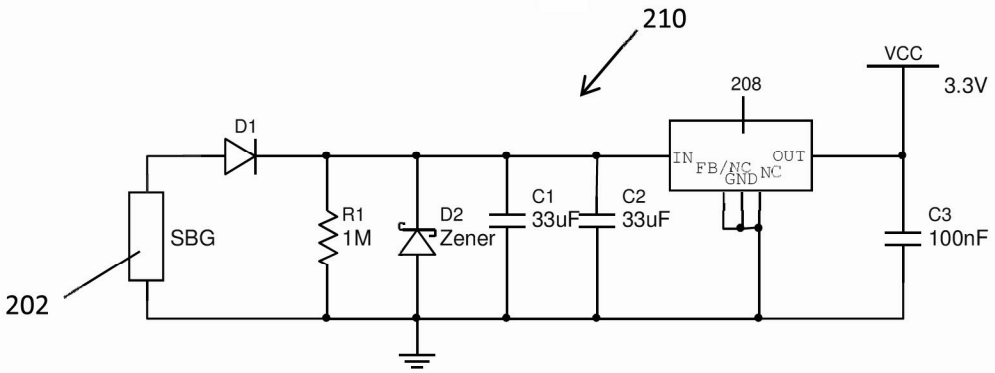

FIG. 3A

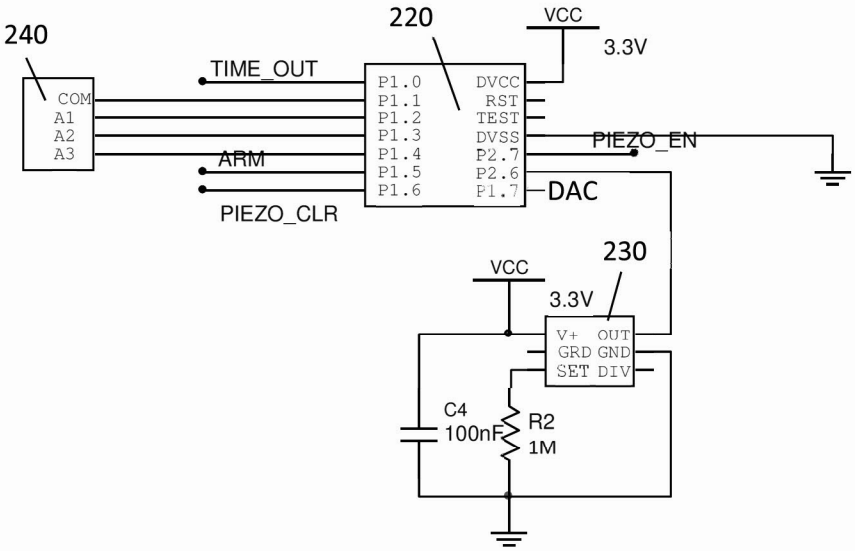

FIG. 3B

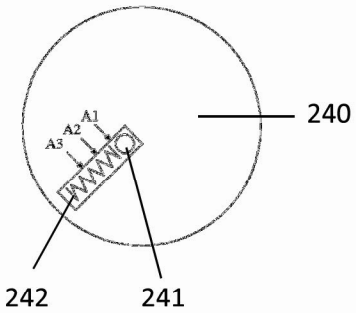

FIG. 3B1

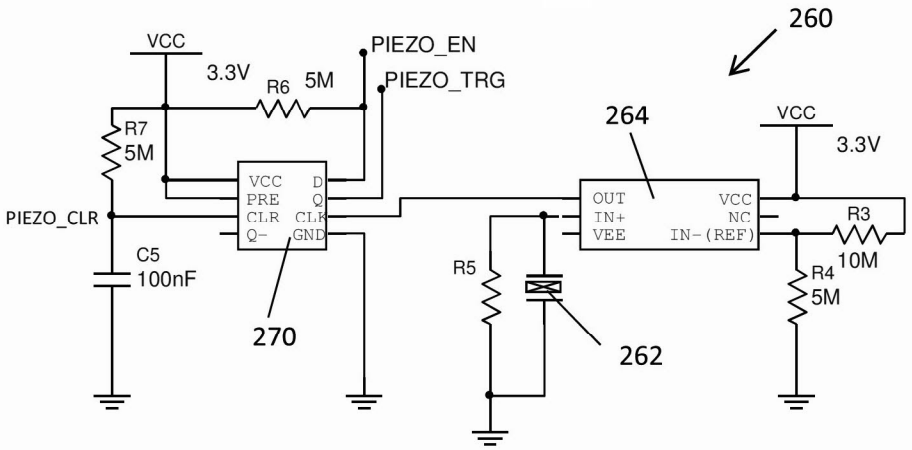

FIG. 3C

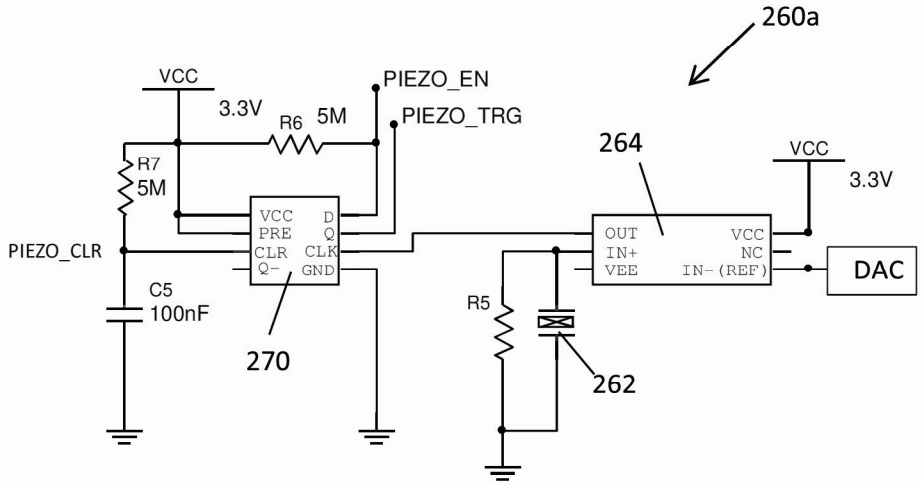

FIG. 3C1

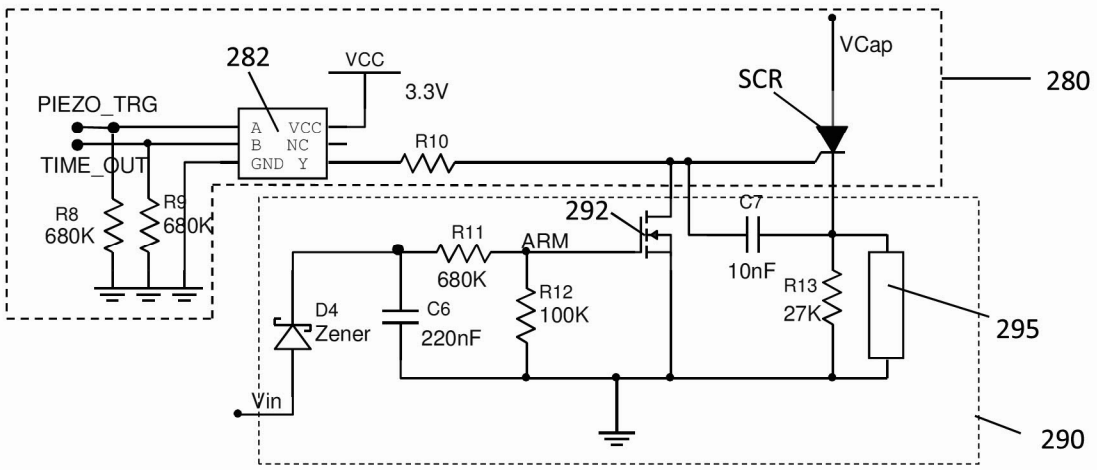

FIG. 3 D