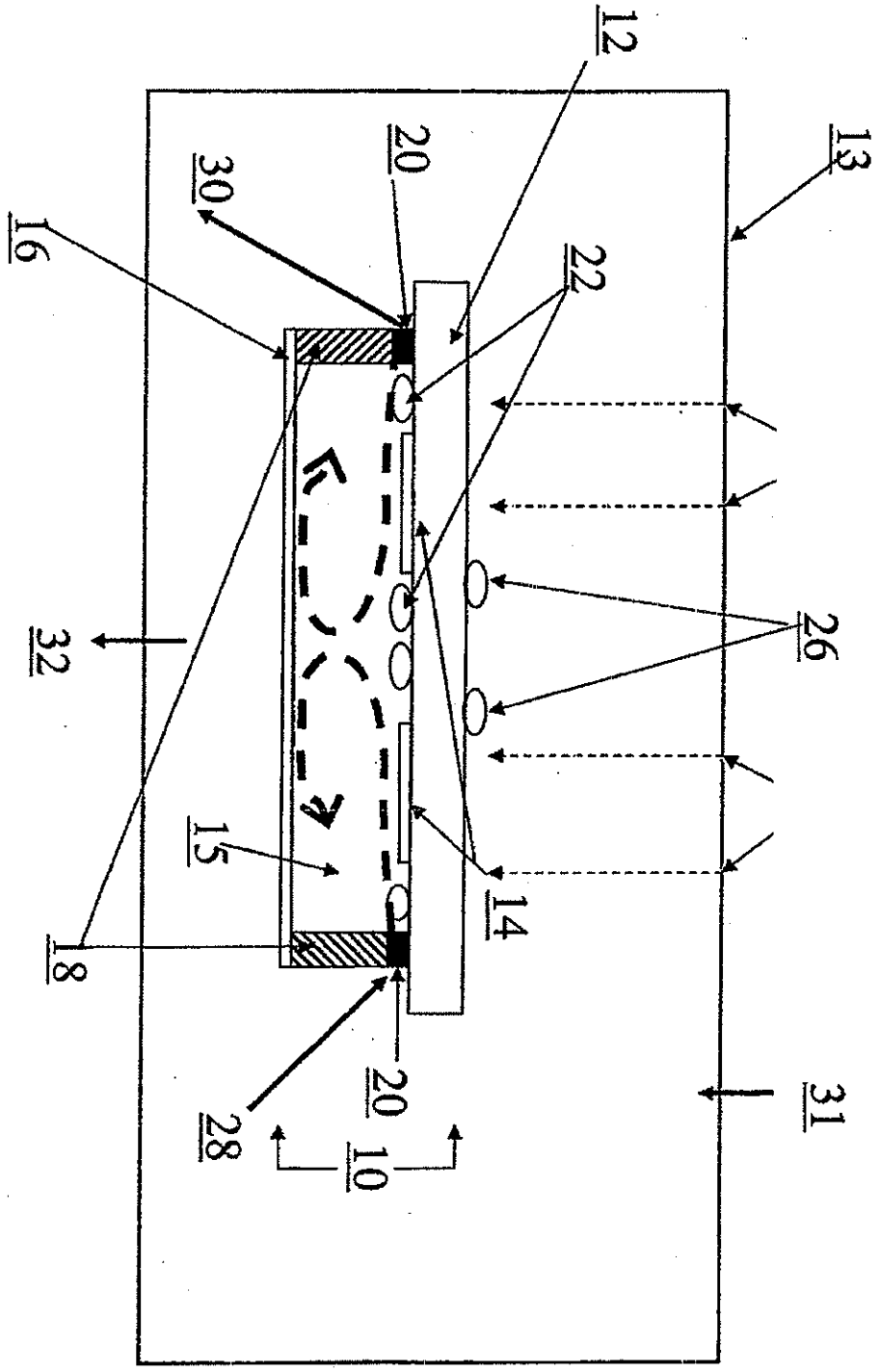

Figure 1

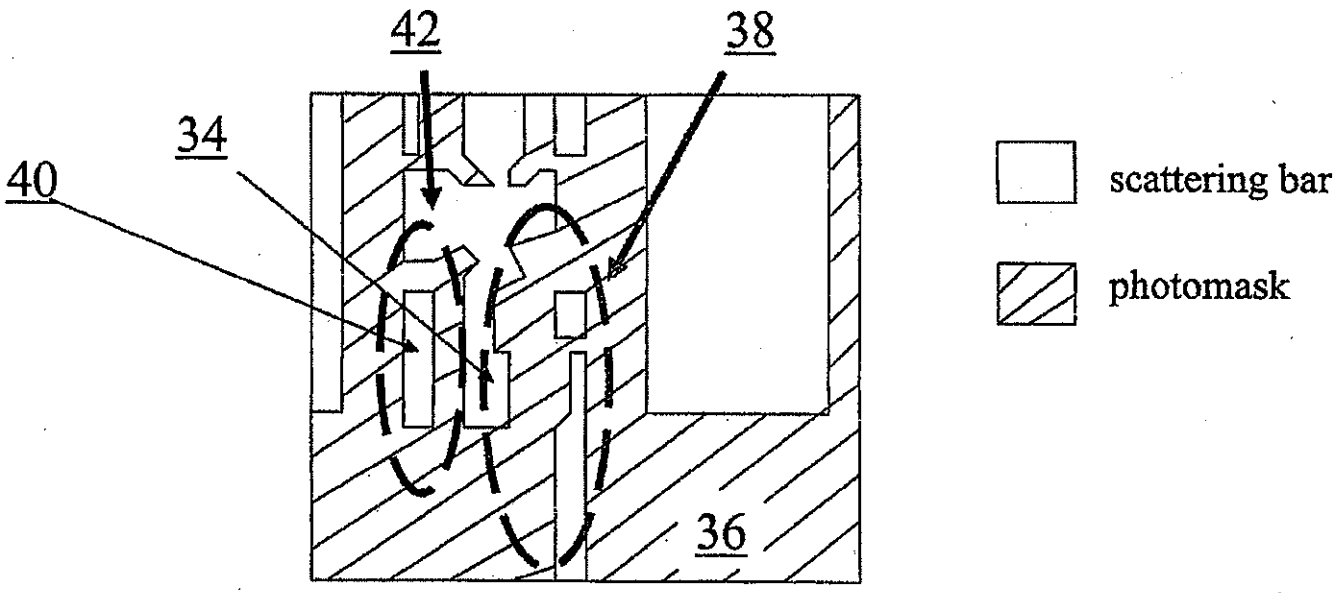

Figure 2

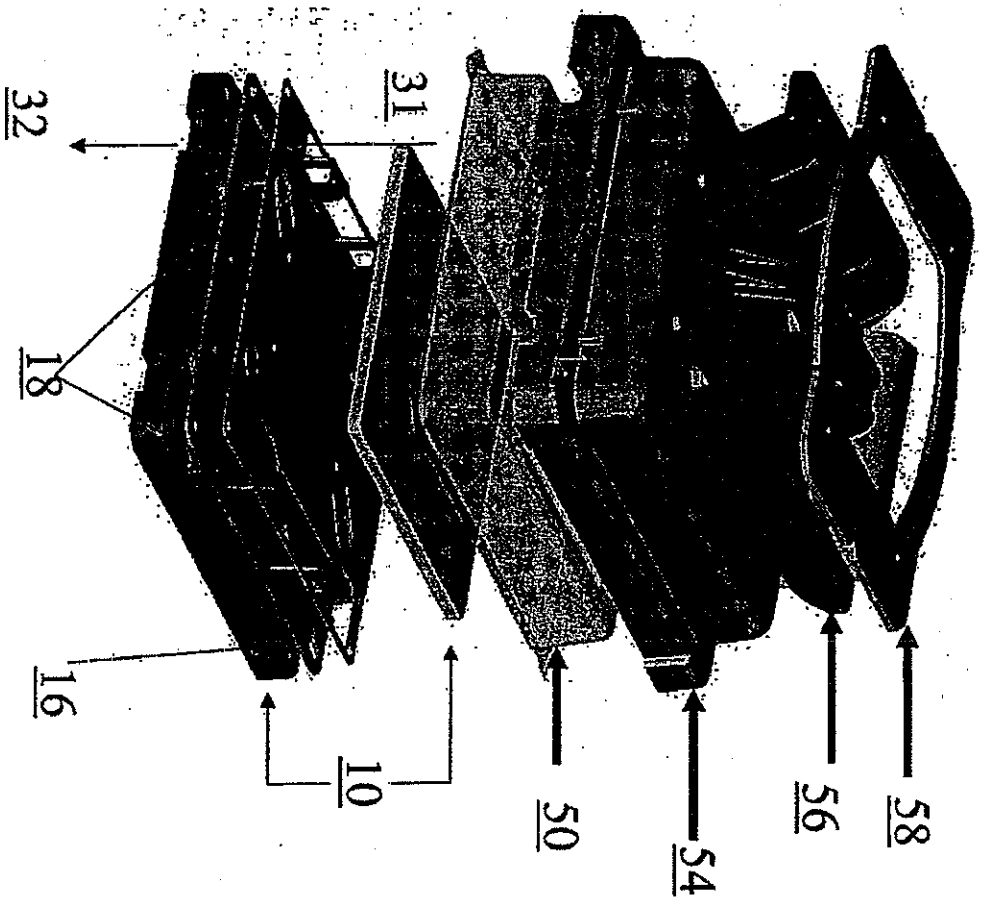

Figure 3

Best Available Copy

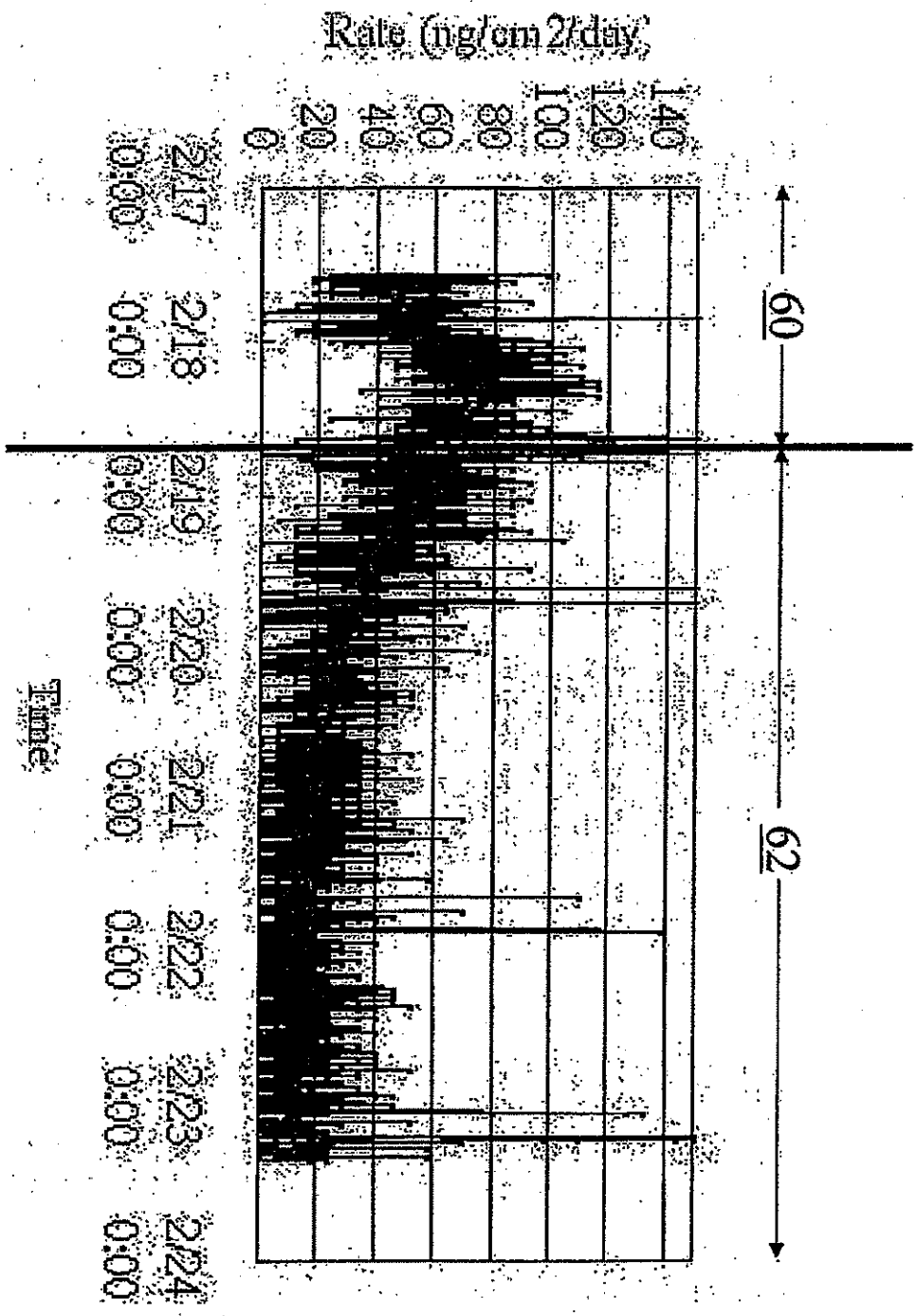

Figure 4

Best Available Copy