(12) INTERNATIONAL APPLICATION PUBLISHED UNDER THE PATENT COOPERATION TREATY (PCT)

(19) World Intellectual Property Organization
International Bureau

(43) International Publication Date
29 December 2004 (29.12.2004)

PCT

(10) International Publication Number
WO 2004/113959 A3

(51) International Patent Classification[7]: G02C 7/04, 7/06, A61F 2/16

(21) International Application Number: PCT/US2004/019009

(22) International Filing Date: 16 June 2004 (16.06.2004)

(25) Filing Language: English

(26) Publication Language: English

(30) Priority Data:
10/462,294 16 June 2003 (16.06.2003) US

(71) Applicant *(for all designated States except US)*: **APOLLO OPTICAL SYSTEMS LLC** [US/US]; 330 Clay Road, Rochester, NY 14623 (US).

(72) Inventors: **MORRIS, G., Michael**; 8 SCR Lane, Victor, NY 14564 (US). **BURALLI, Dale, A.**; 99 Eastland Avenue, Rochester, NY 14618 (US). **FEDERICO, Richard, J.**; 162 Archer Road, Churchville, NY 14428 (US).

(74) Agent: **LUKACHER, Kenneth, J.**; South Winton Court, 3136 Winton Road South, Suite 204, Rochester, NY 14623 (US).

(81) Designated States *(unless otherwise indicated, for every kind of national protection available)*: AE, AG, AL, AM, AT, AU, AZ, BA, BB, BG, BR, BW, BY, BZ, CA, CH, CN, CO, CR, CU, CZ, DE, DK, DM, DZ, EC, EE, EG, ES, FI, GB, GD, GE, GH, GM, HR, HU, ID, IL, IN, IS, JP, KE, KG, KP, KR, KZ, LC, LK, LR, LS, LT, LU, LV, MA, MD, MG, MK, MN, MW, MX, MZ, NA, NI, NO, NZ, OM, PG, PH, PL, PT, RO, RU, SC, SD, SE, SG, SK, SL, SY, TJ, TM, TN, TR, TT, TZ, UA, UG, US, UZ, VC, VN, YU, ZA, ZM, ZW.

(84) Designated States *(unless otherwise indicated, for every kind of regional protection available)*: ARIPO (BW, GH, GM, KE, LS, MW, MZ, NA, SD, SL, SZ, TZ, UG, ZM, ZW), Eurasian (AM, AZ, BY, KG, KZ, MD, RU, TJ, TM), European (AT, BE, BG, CH, CY, CZ, DE, DK, EE, ES, FI, FR, GB, GR, HU, IE, IT, LU, MC, NL, PL, PT, RO, SE, SI, SK, TR), OAPI (BF, BJ, CF, CG, CI, CM, GA, GN, GQ, GW, ML, MR, NE, SN, TD, TG).

**Published:**
— *with international search report*
— *before the expiration of the time limit for amending the claims and to be republished in the event of receipt of amendments*

(88) Date of publication of the international search report: 14 April 2005

*For two-letter codes and other abbreviations, refer to the "Guidance Notes on Codes and Abbreviations" appearing at the beginning of each regular issue of the PCT Gazette.*

(54) Title: BIFOCAL MULTIORDER DIFFRACTIVE LENSES FOR VISION CORRECTION

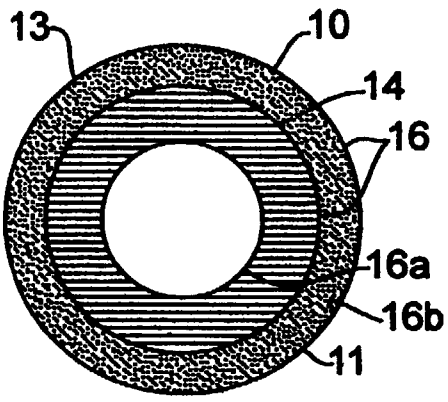


(57) Abstract: A bifocal multiorder diffractive lens (10) is provided having a lens body (11) with one or more first regions (14) having a first multiorder diffractive structure providing near vision correction, and one or more second regions (16) having a second multiorder diffractive structure providing distance vision correction, in which the lens (10) defines an aperture divided between the first and second regions (14, 16).

WO 2004/113959 A3