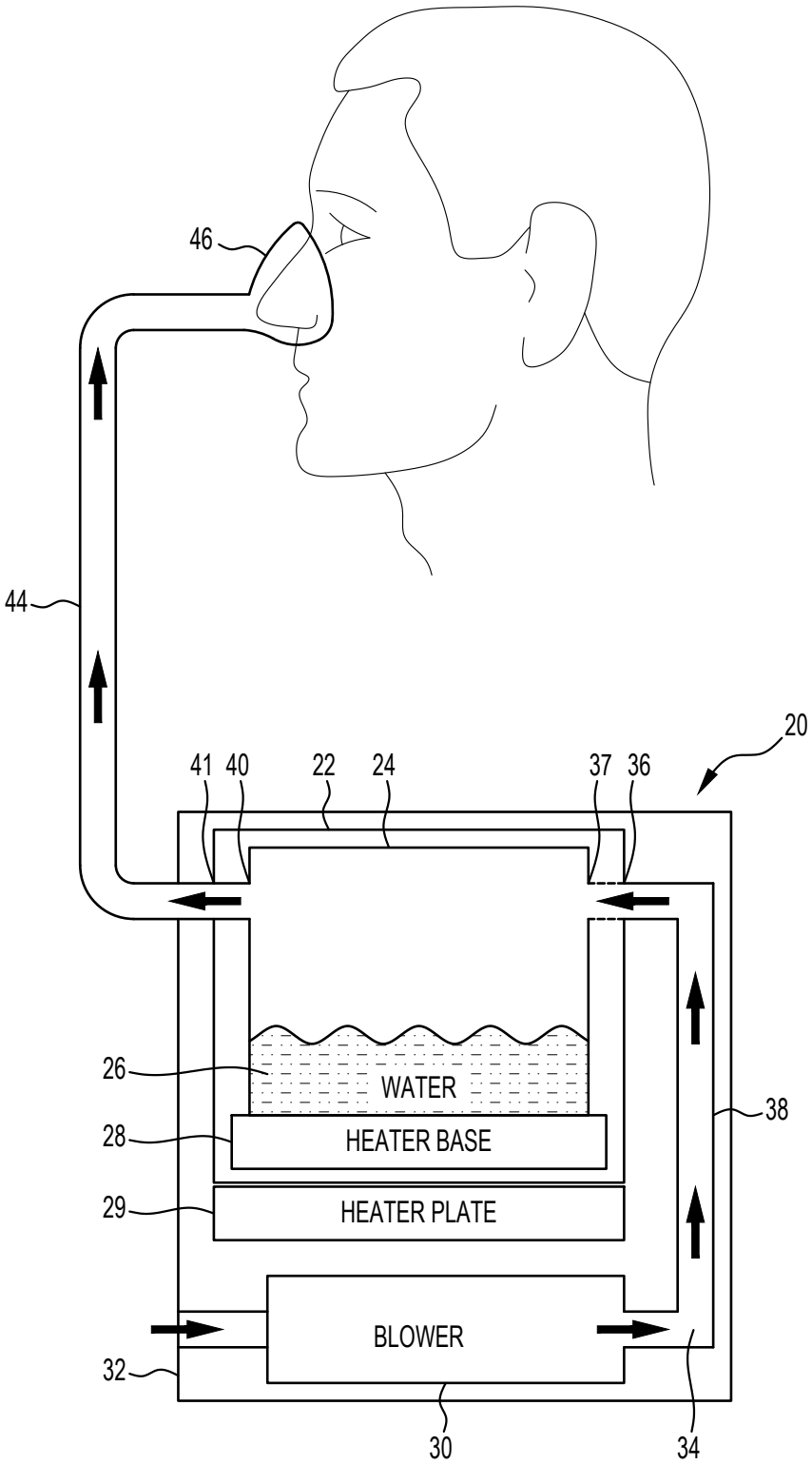
46
44
20
41
40
22
24
37
36
26
WATER
38
28
HEATER BASE
29
HEATER PLATE
BLOWER
32
30
34

Figure 1A

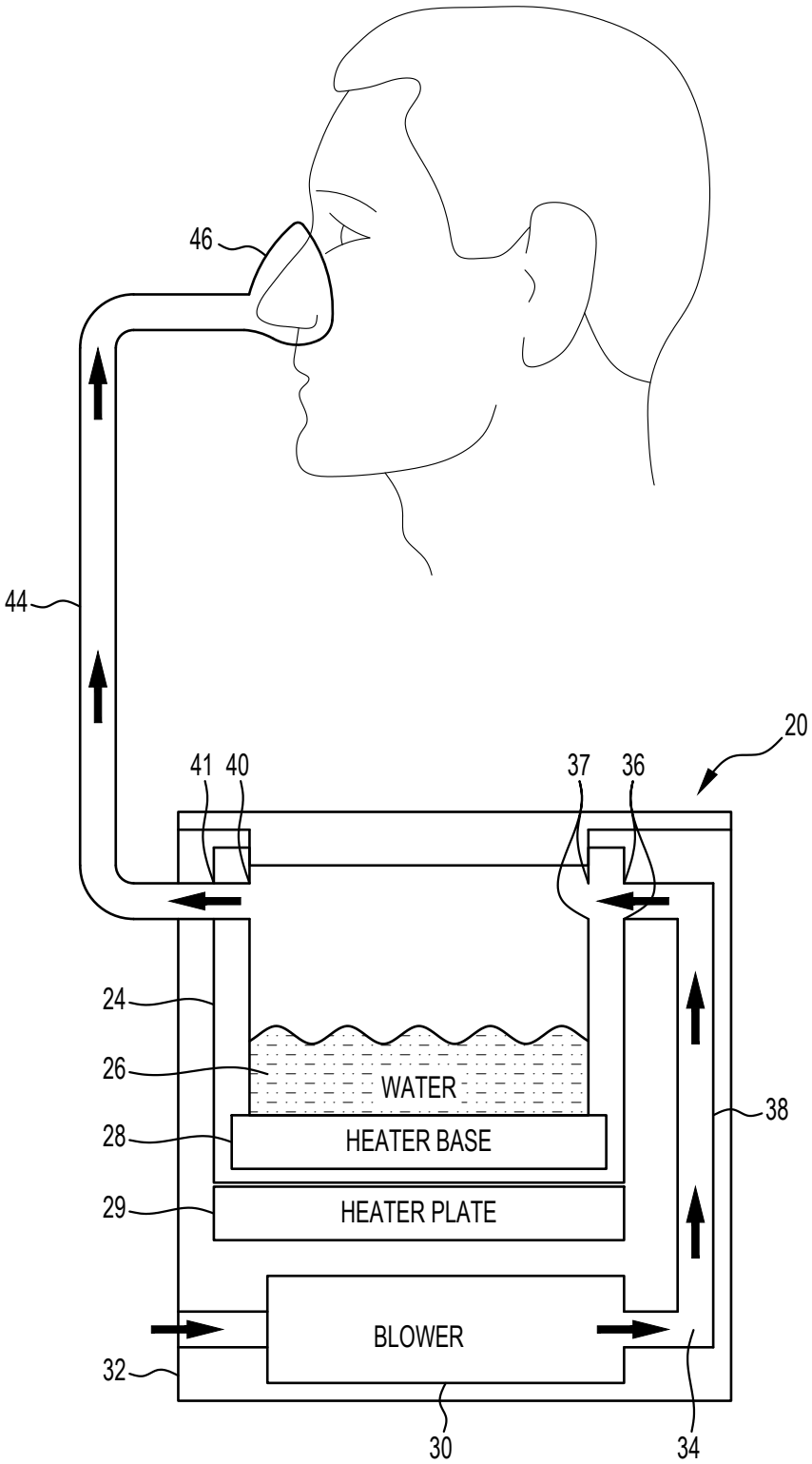
46
44
20
41
40
37
36
24
26
WATER
38
28
HEATER BASE
29
HEATER PLATE
BLOWER
32
30
34

Figure 1B

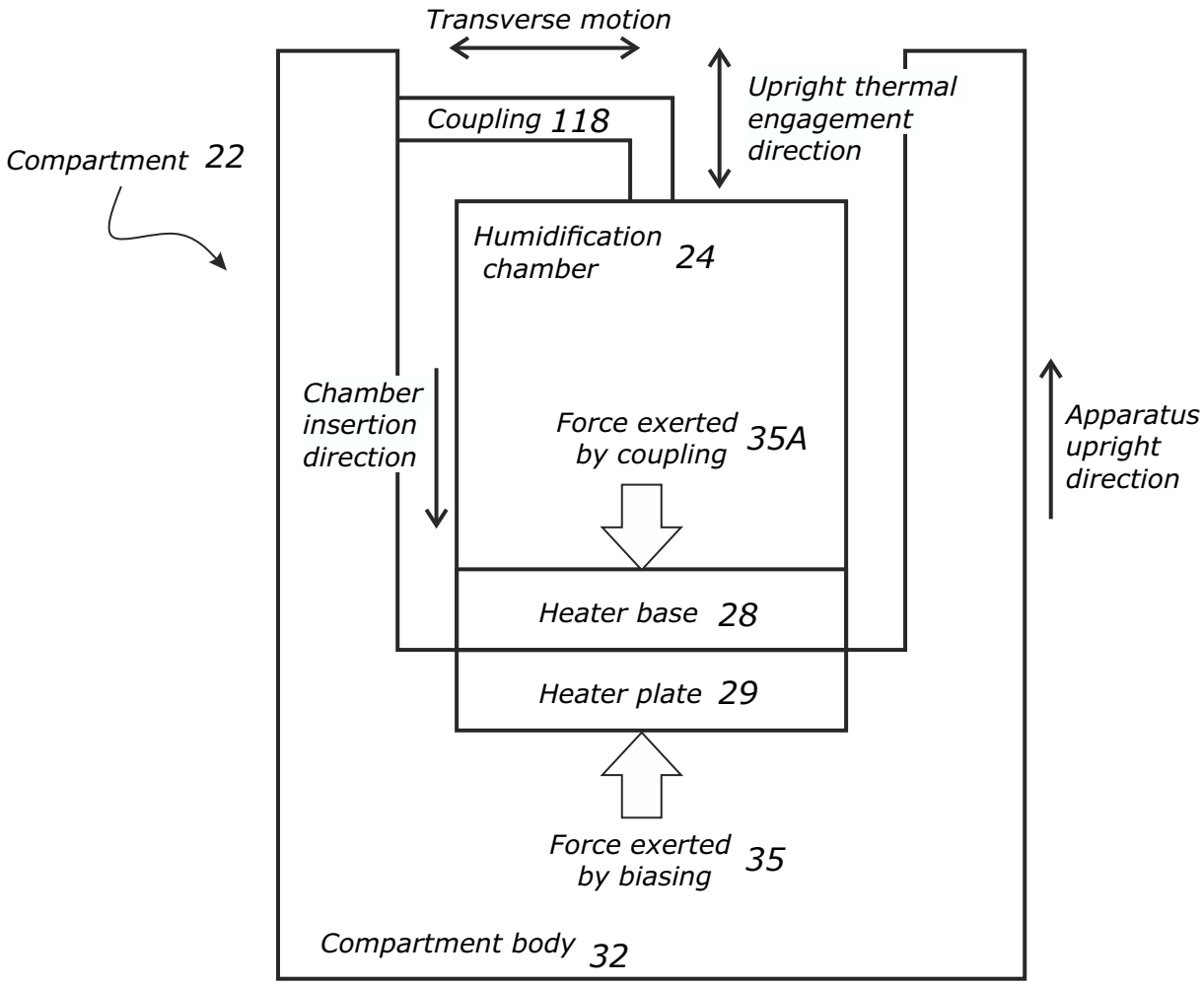
Transverse motion
Upright thermal engagement direction
Coupling 118
Compartment 22
Humidification chamber 24
Chamber insertion direction
Force exerted by coupling 35A
Apparatus upright direction
Heater base 28
Heater plate 29
Force exerted by biasing 35
Compartment body 32

Figure 2

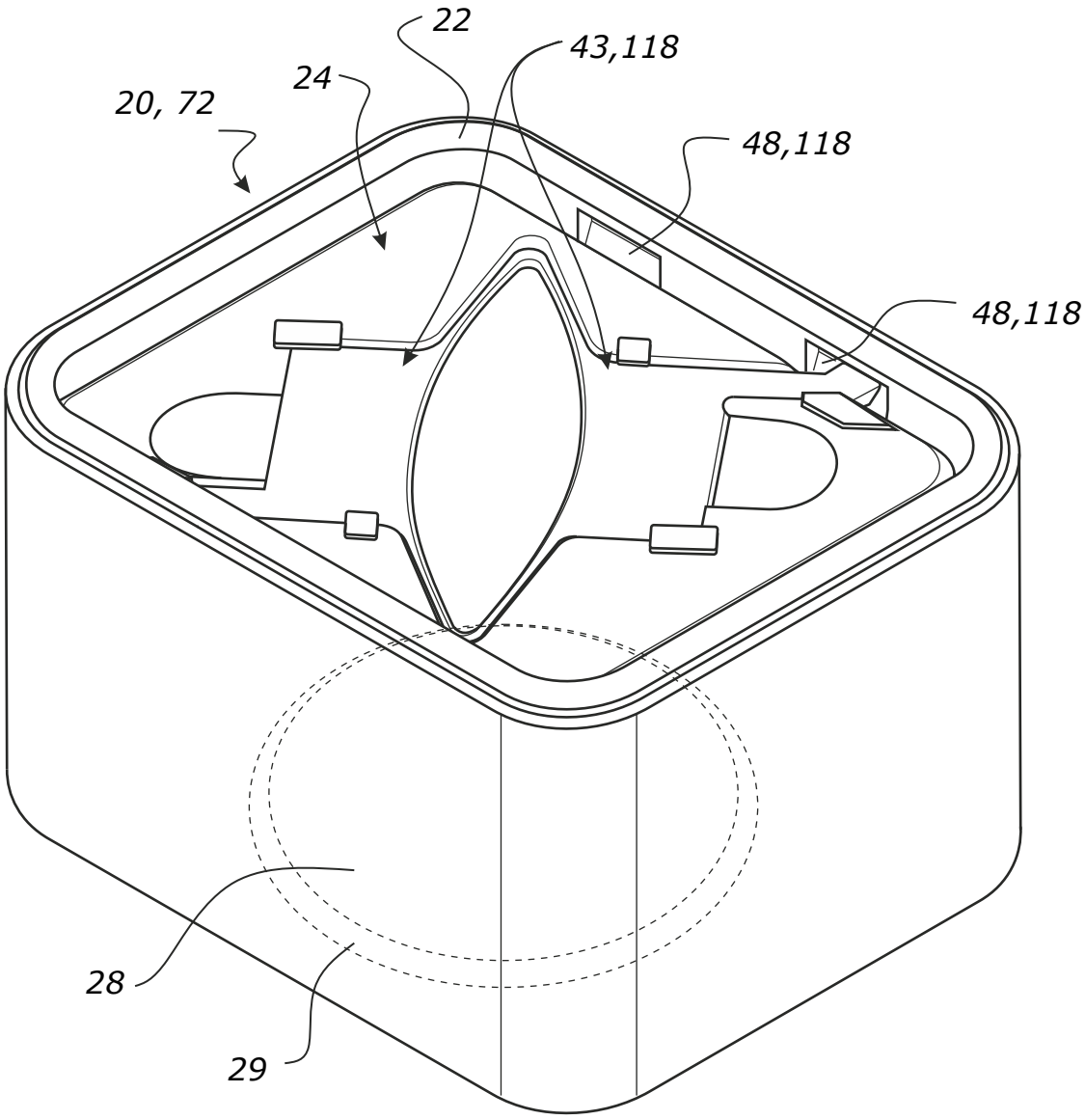

Figure 3A

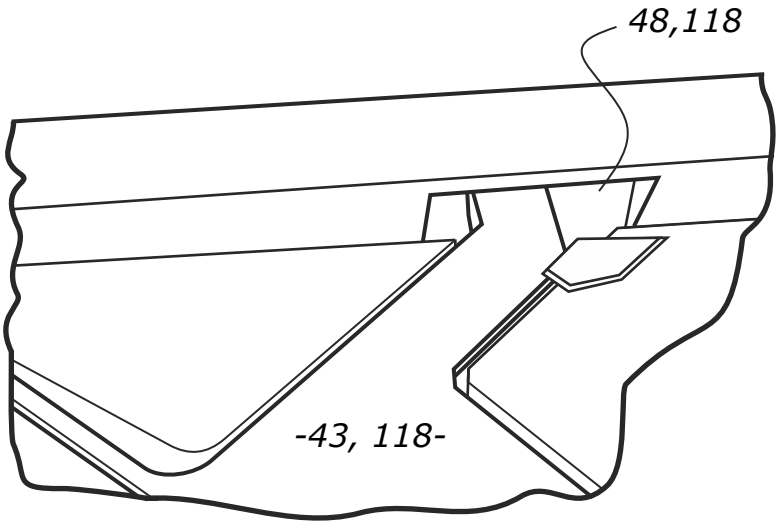

Figure 3B

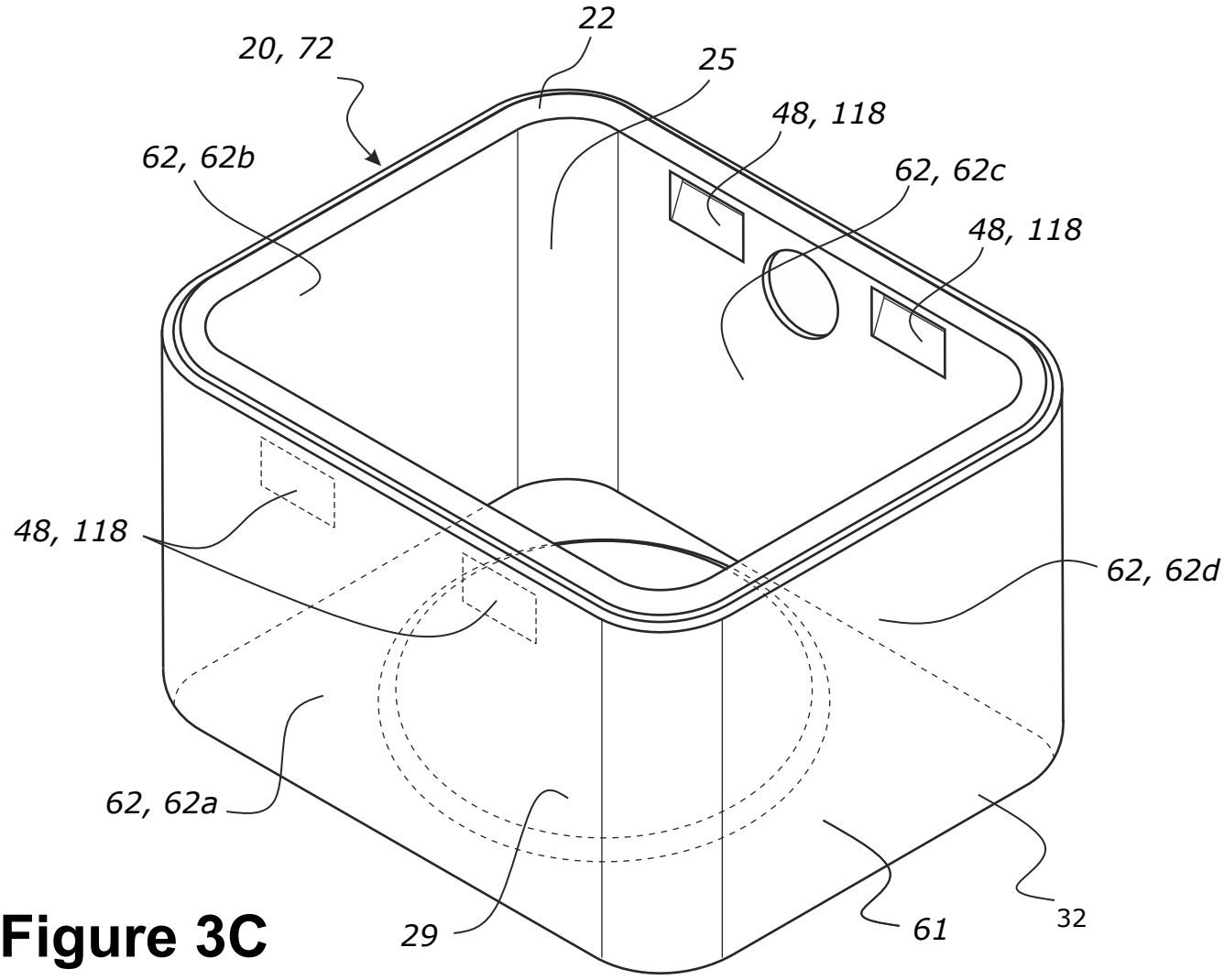

Figure 3C

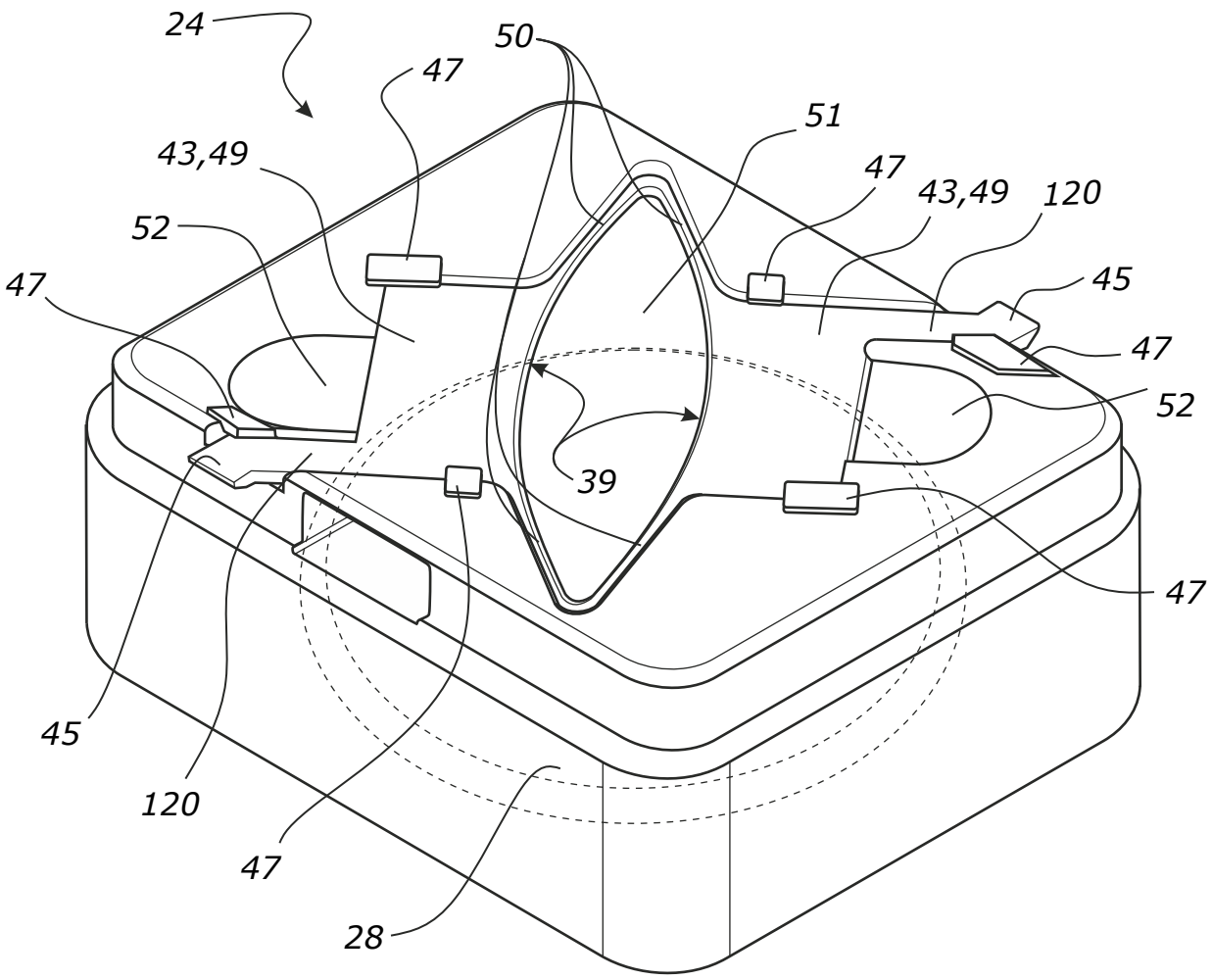

Figure 3D

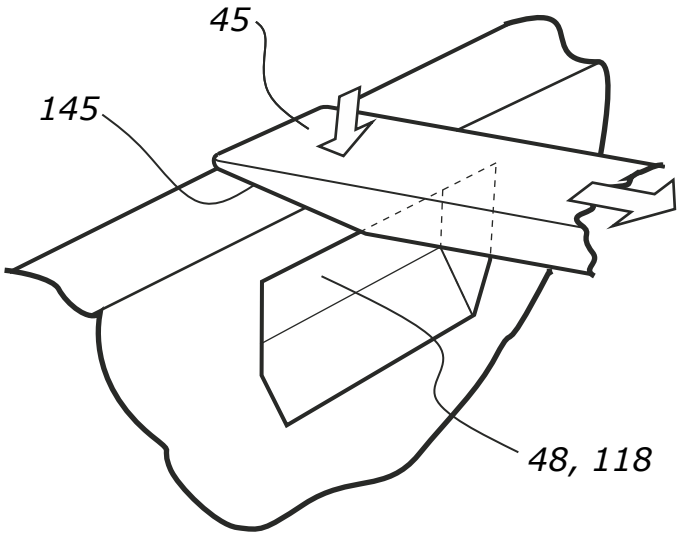

Figure 3E

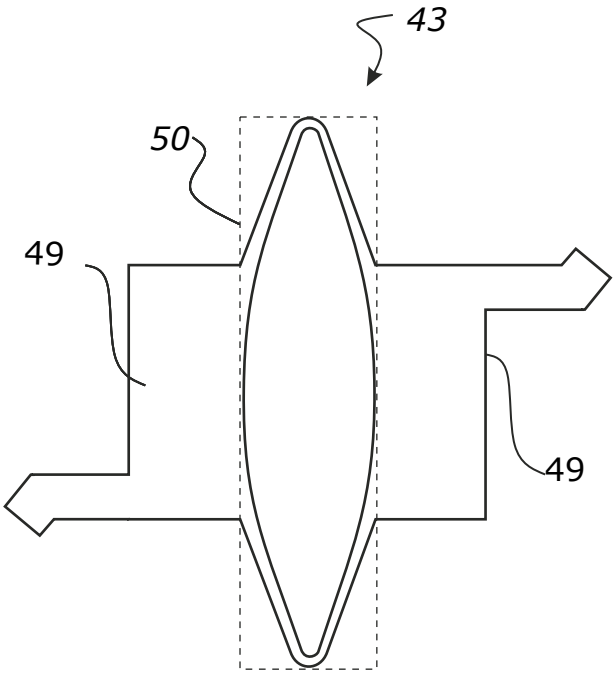

Figure 3F

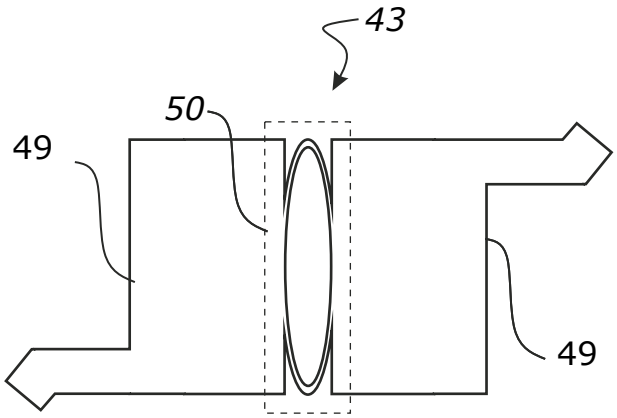

Figure 3G

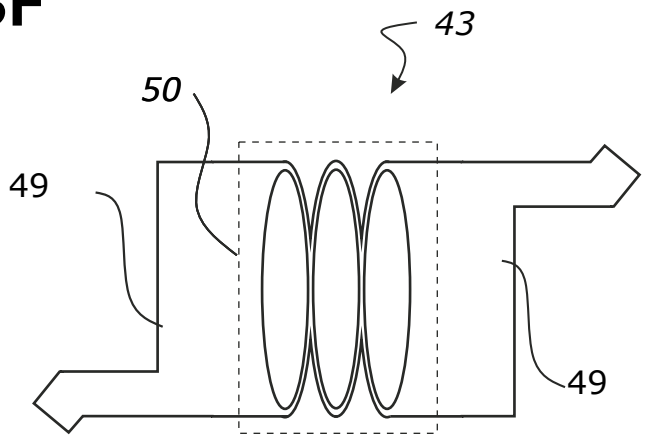

Figure 3H

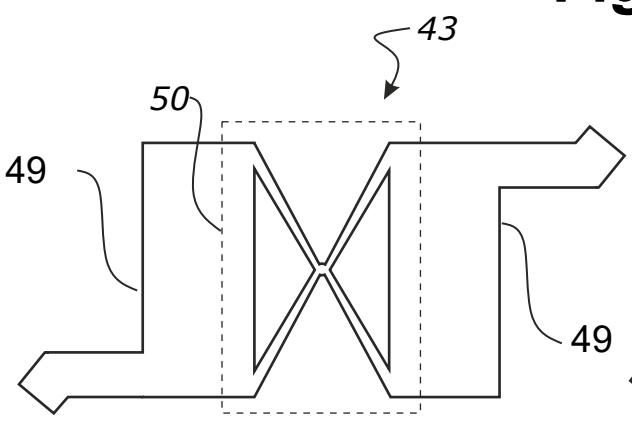

Figure 3I

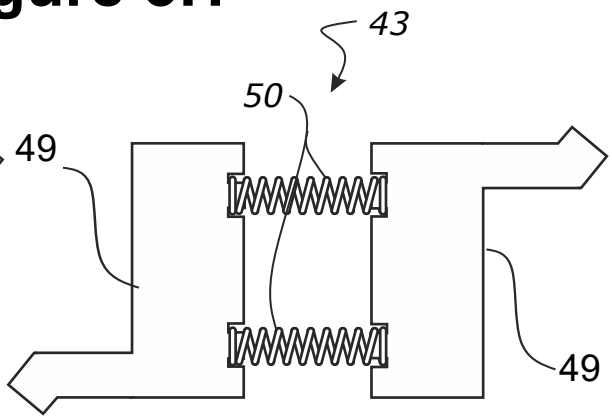

Figure 3J

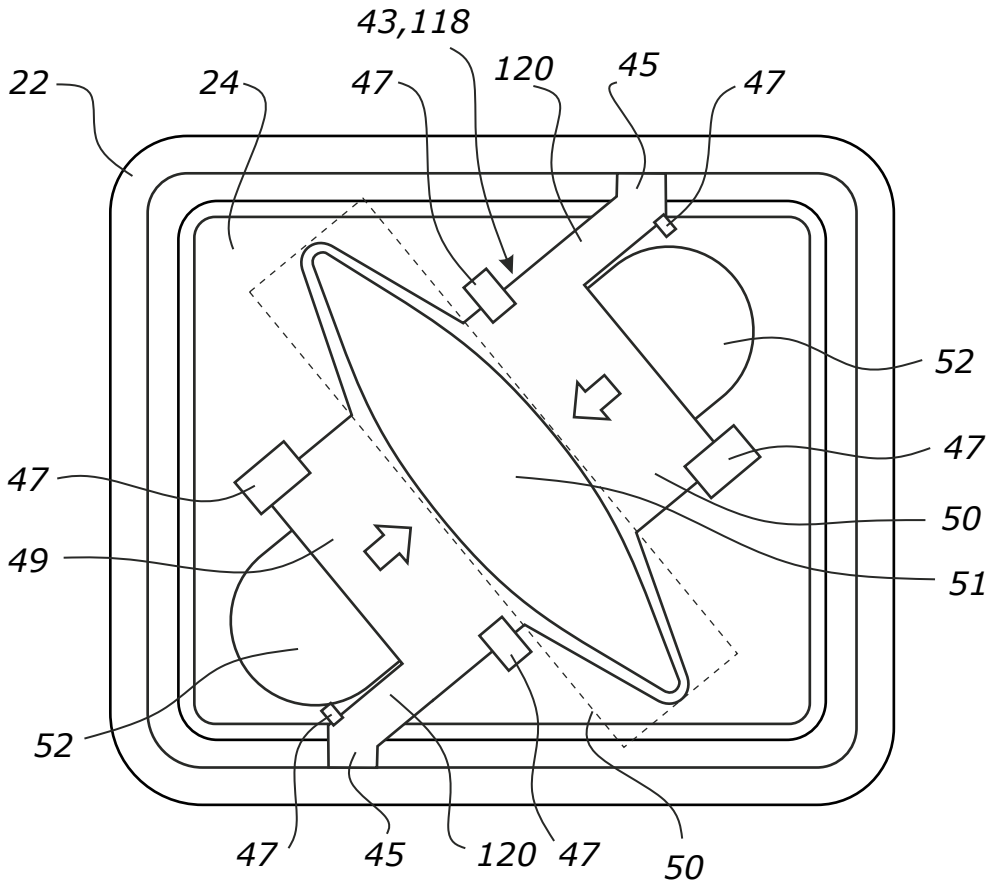

Figure 3K

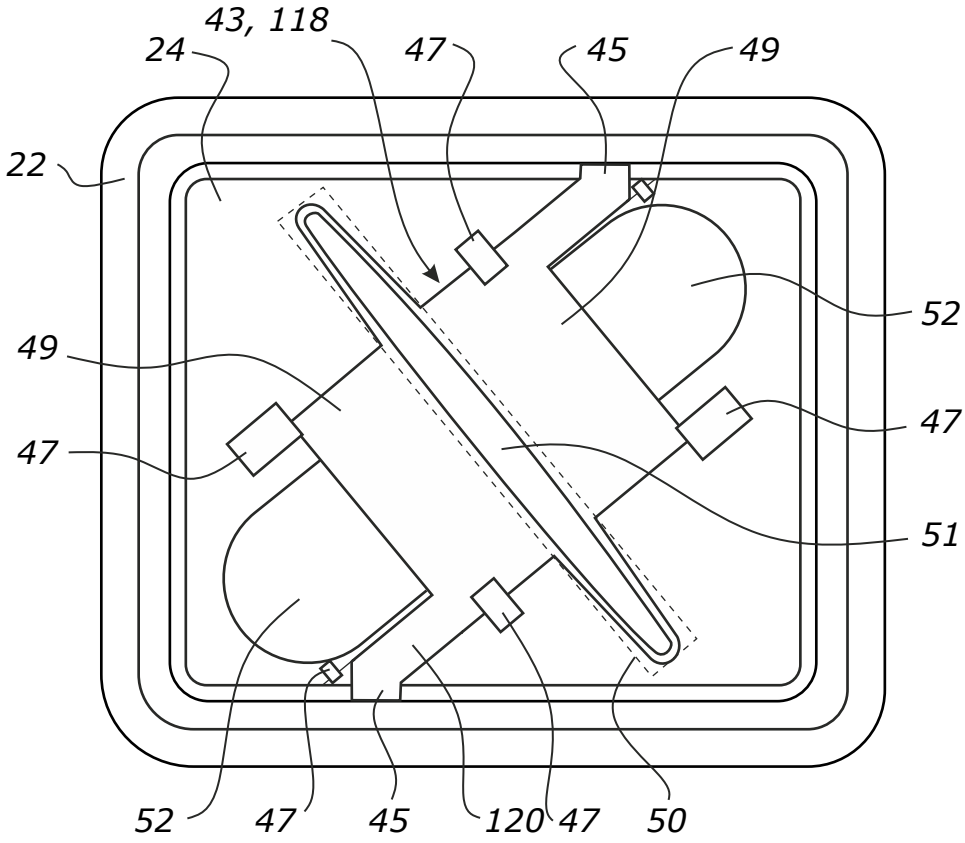

Figure 3L

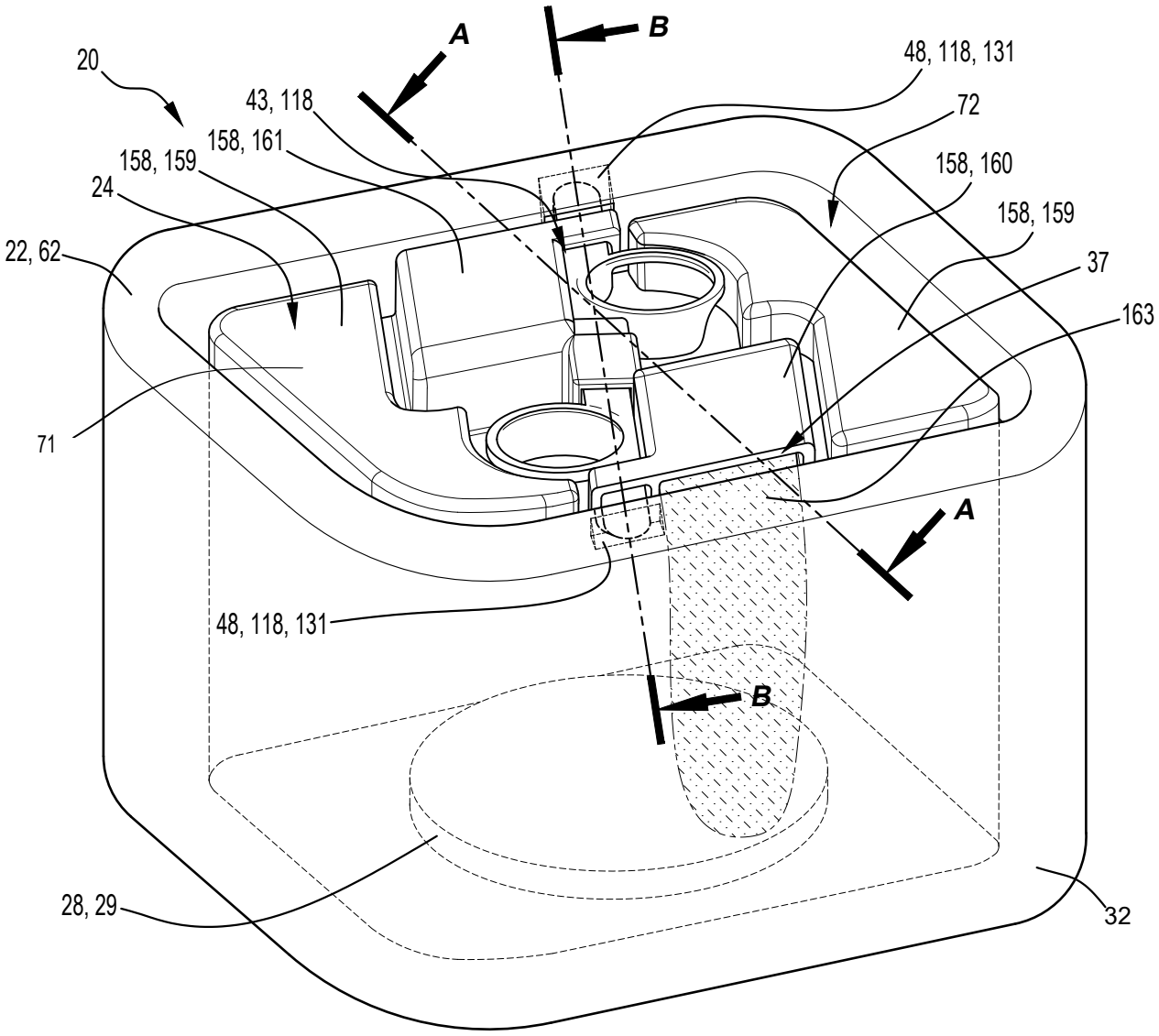
20
A
B
43, 118
158, 161
158, 159
24
22, 62
71
48, 118, 131
72
158, 160
158, 159
37
163
A
48, 118, 131
B
28, 29
32

Figure 4A

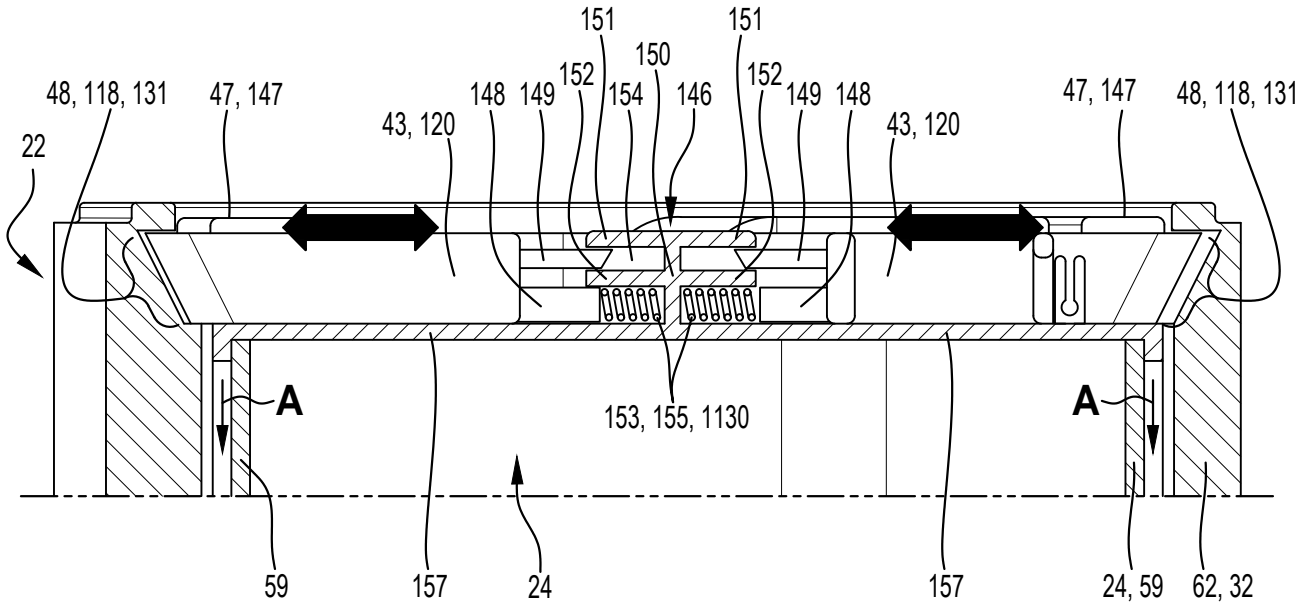

Section B-B

Figure 4B

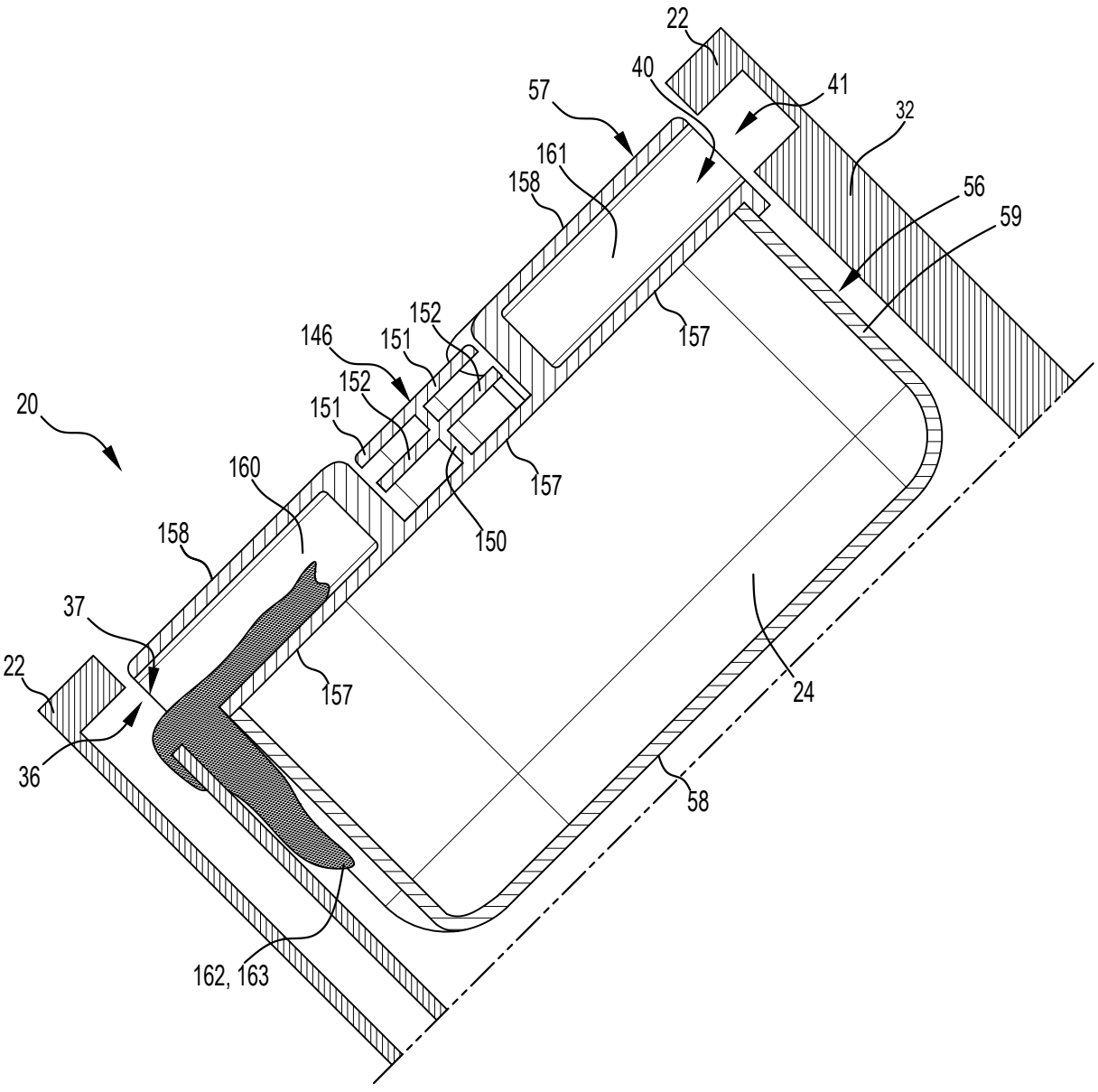

Section A-A

Figure 4C

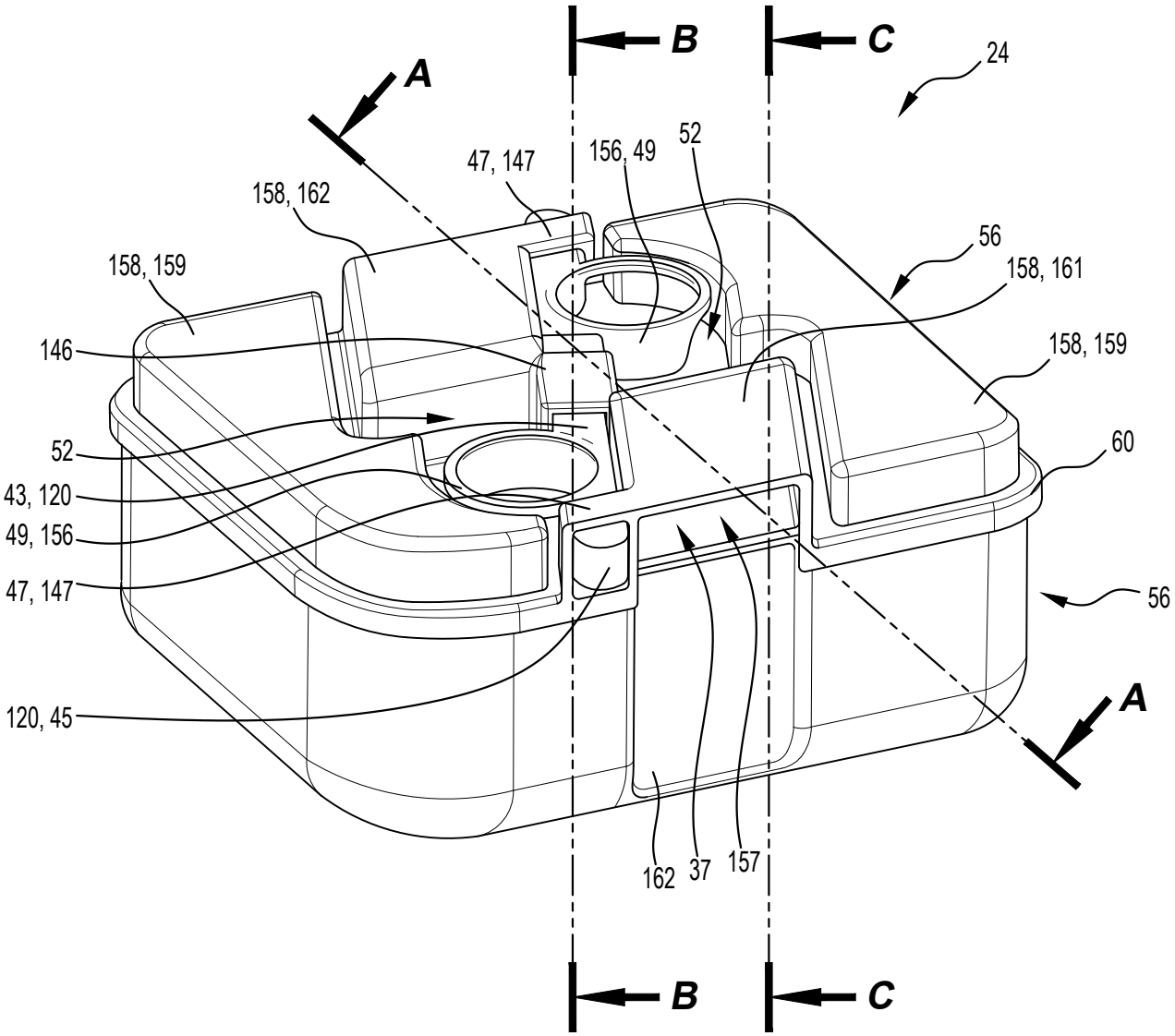
A
B
C
24
47, 147
156, 49
52
158, 162
56
158, 159
158, 161
146
158, 159
52
60
43, 120
49, 156
47, 147
56
120, 45
A
162
37
157
B
C

Figure 4D

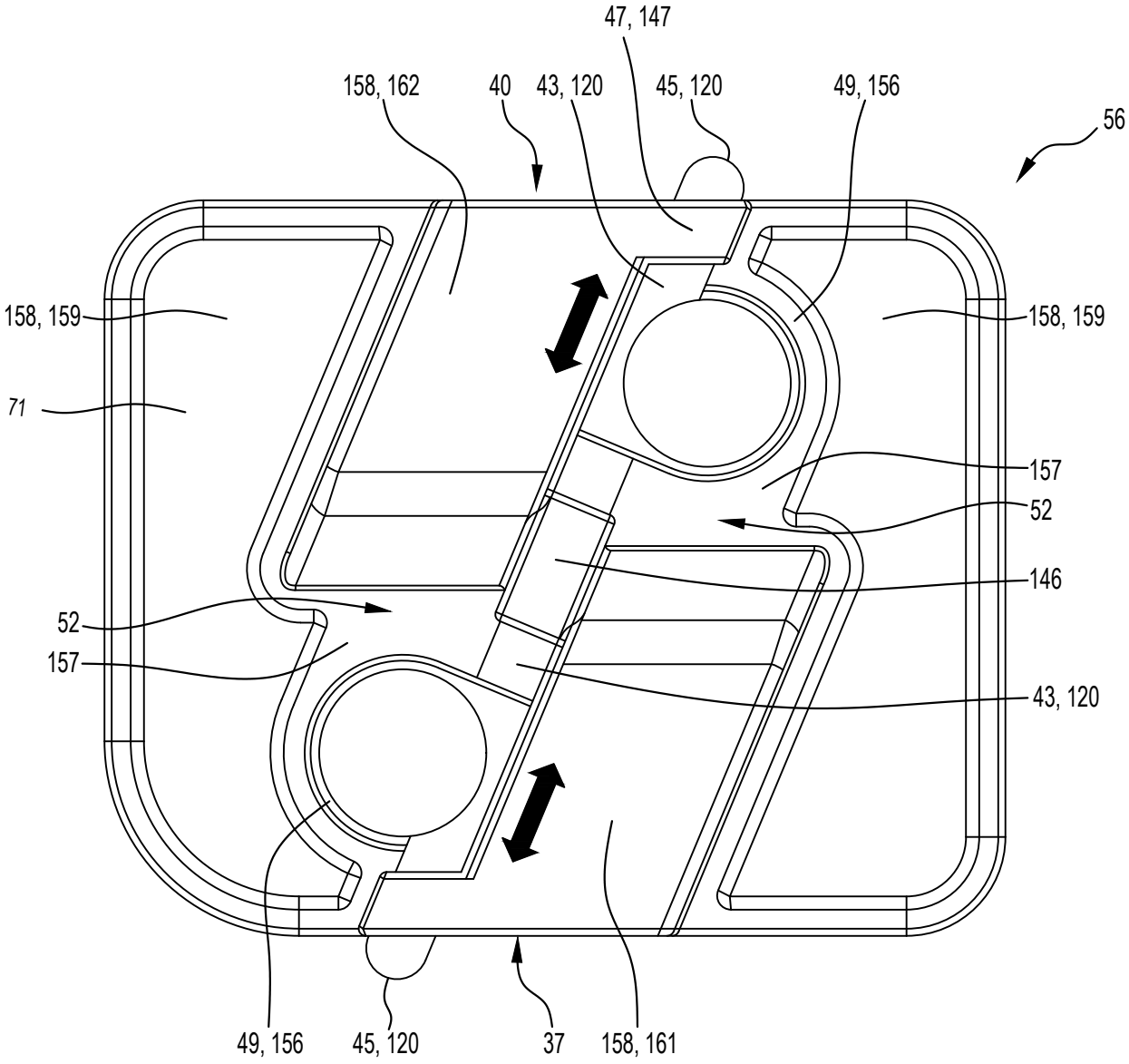
47, 147
158, 162
40
43, 120
45, 120
49, 156
56
158, 159
158, 159
71
157
52
146
52
157
43, 120
49, 156
45, 120
37
158, 161

Figure 4E

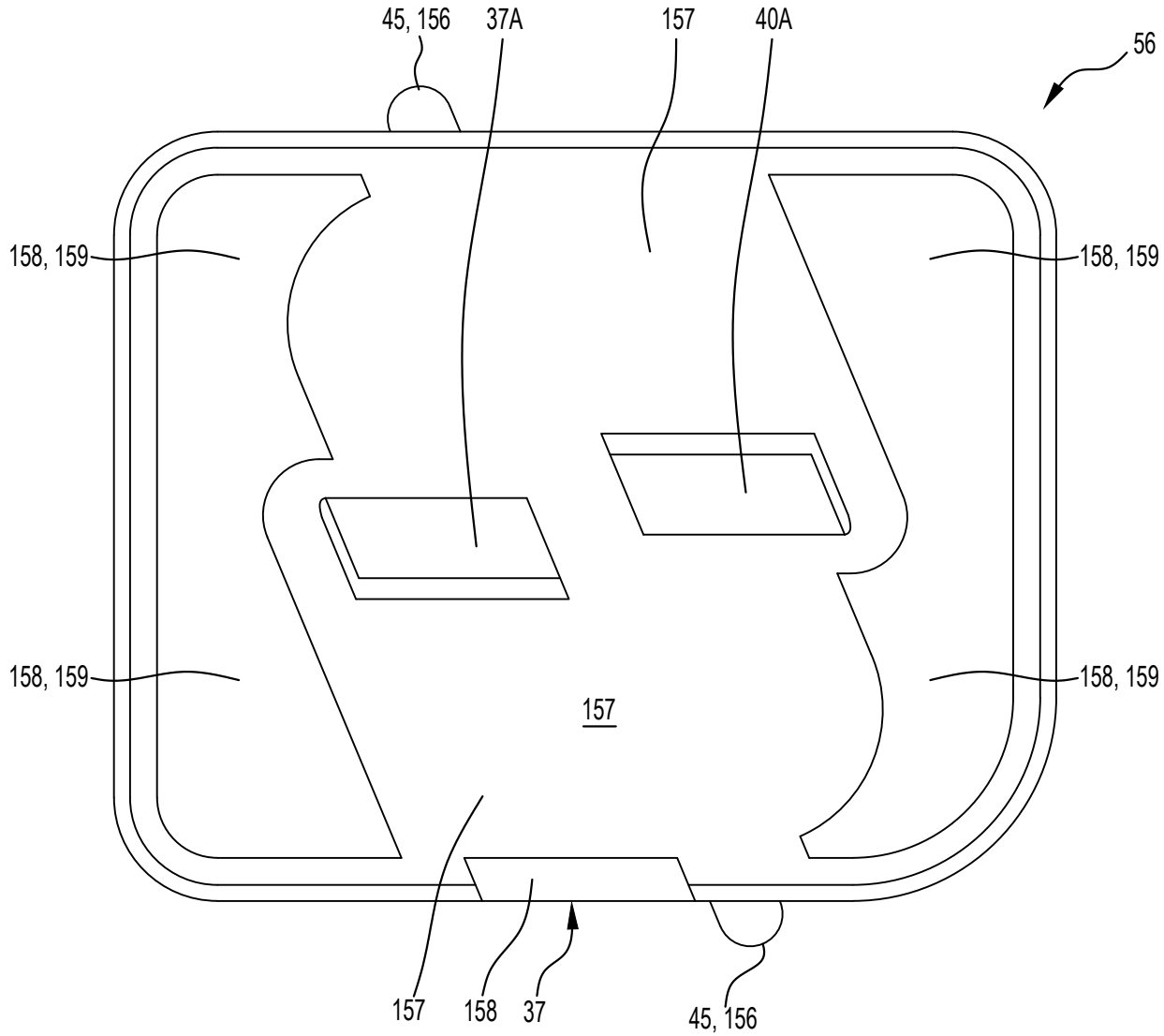
45, 156
37A
157
40A
56
158, 159
158, 159
158, 159
158, 159
157
157
158
37
45, 156

Figure 4F

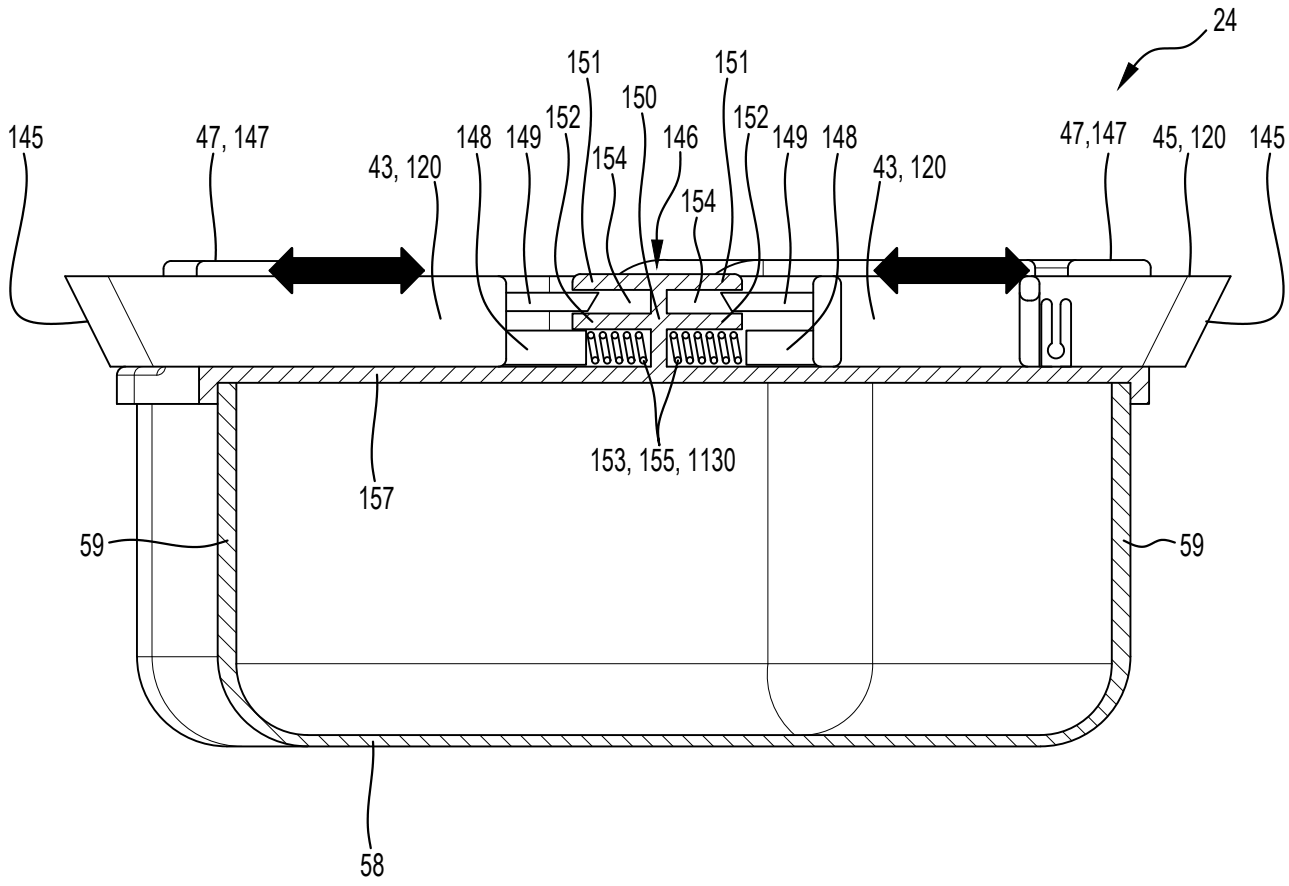

Section B-B

Figure 4G

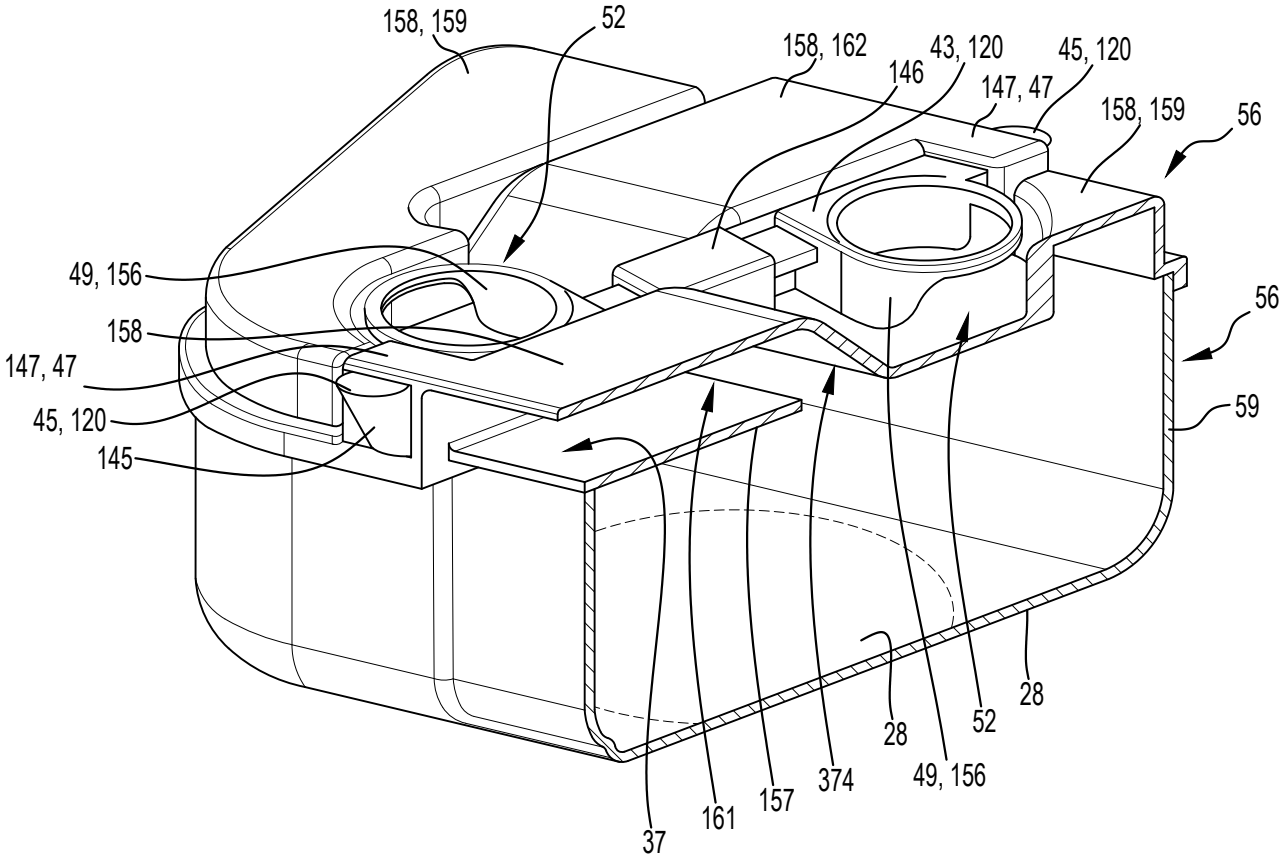

Section C-C

Figure 4H

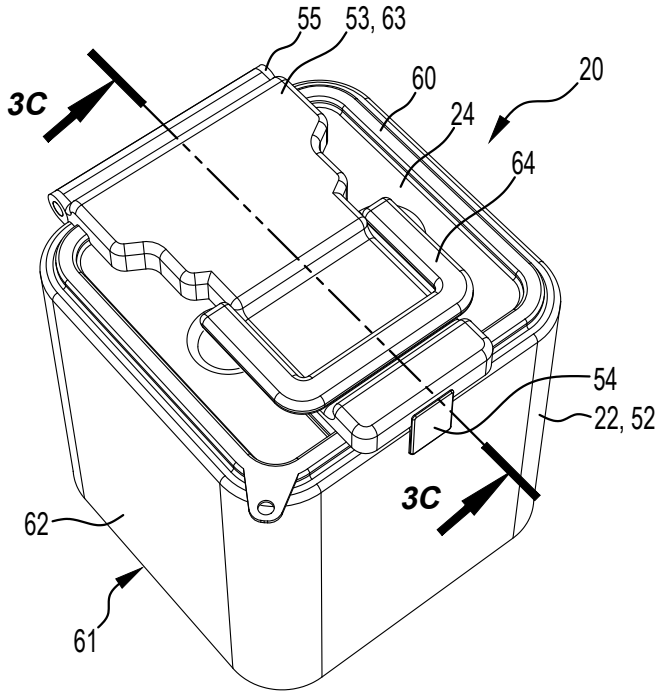

Figure 5A

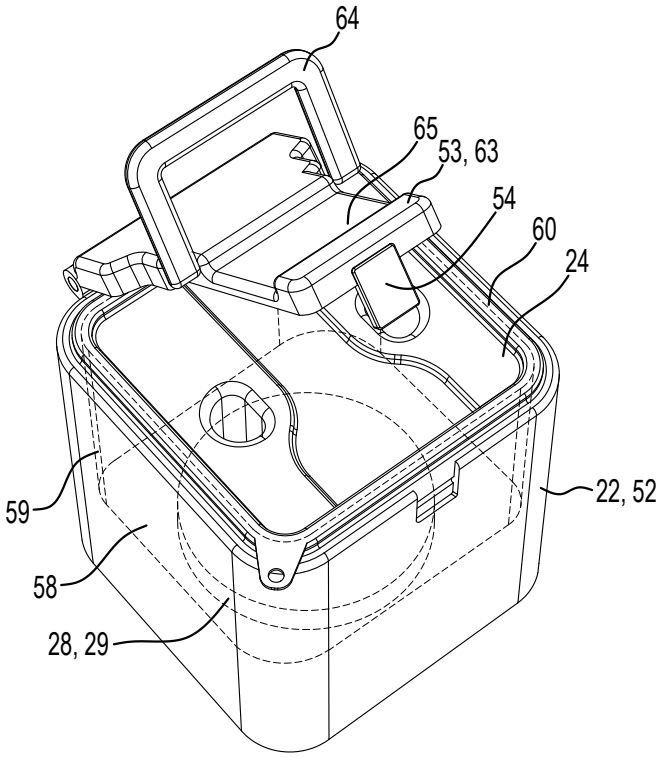

Figure 5B

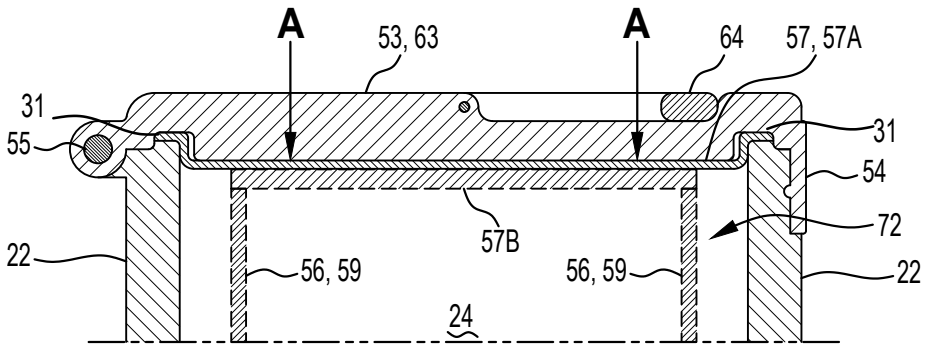

Figure 5C

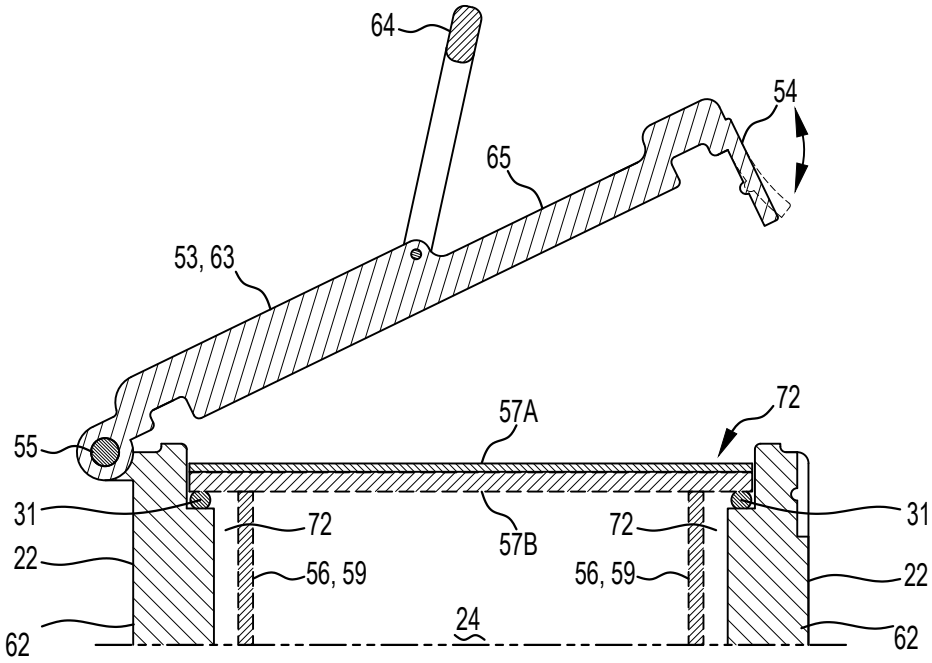

Figure 5D

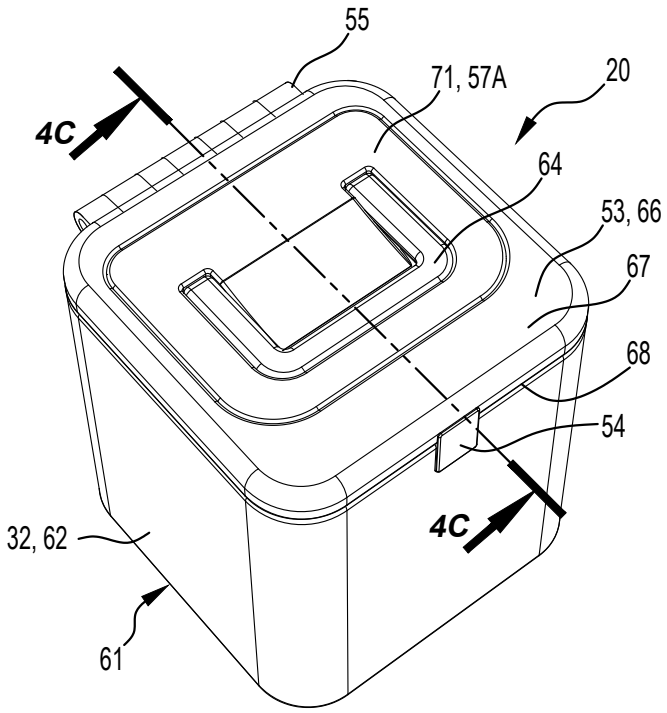

Figure 6A

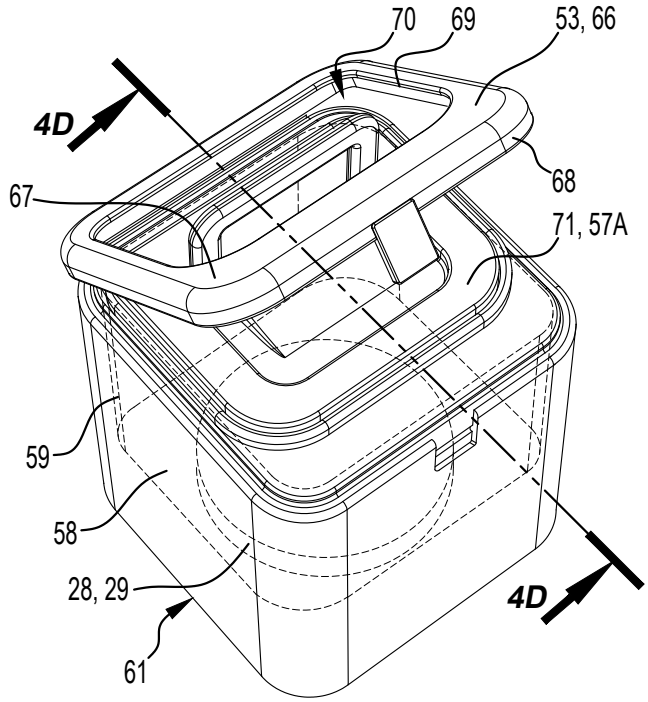

Figure 6B

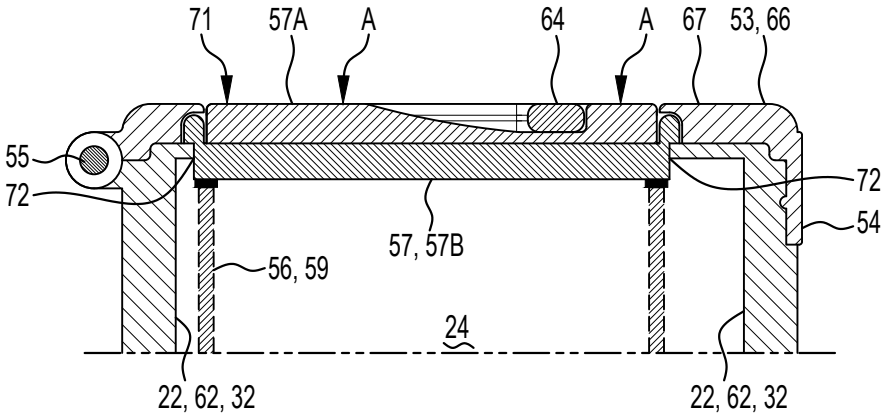

Figure 6C

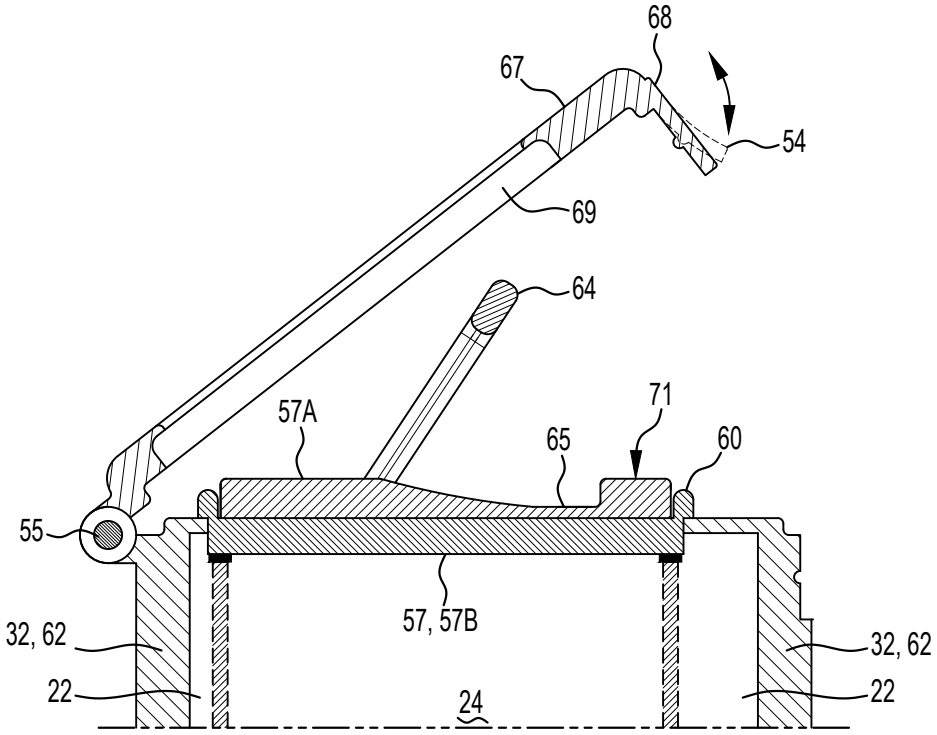

Figure 6D

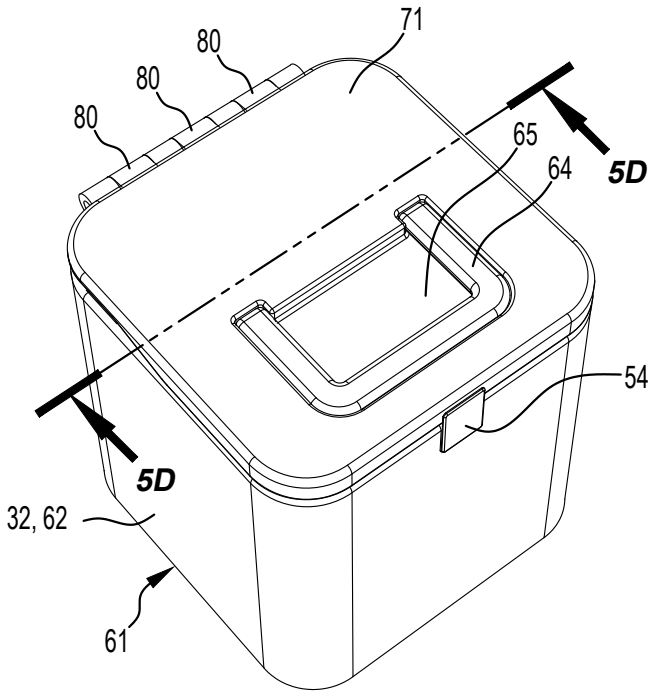

Figure 7A

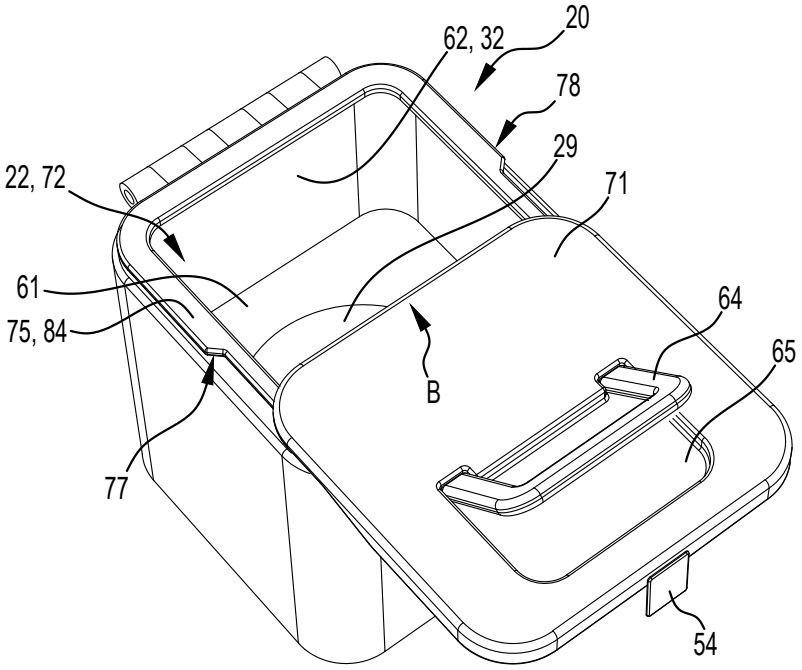

Figure 7B

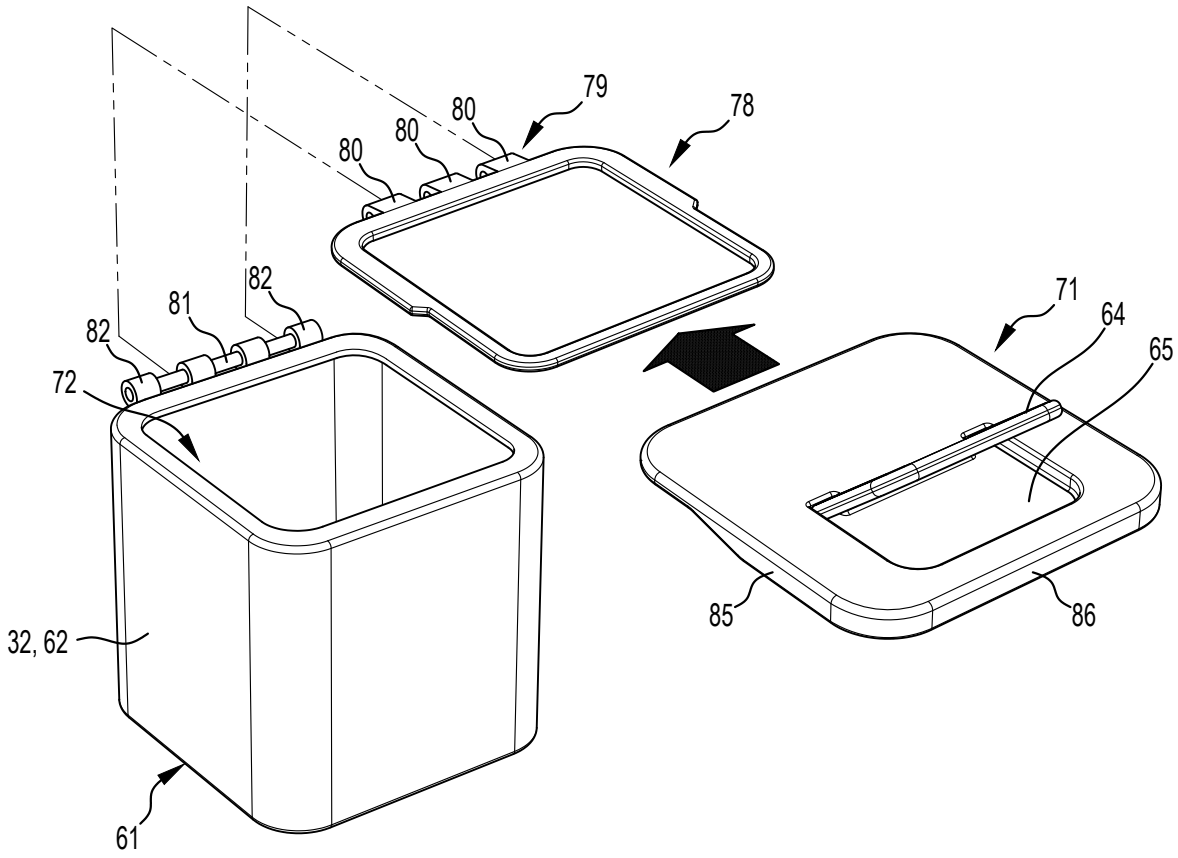

Figure 7C

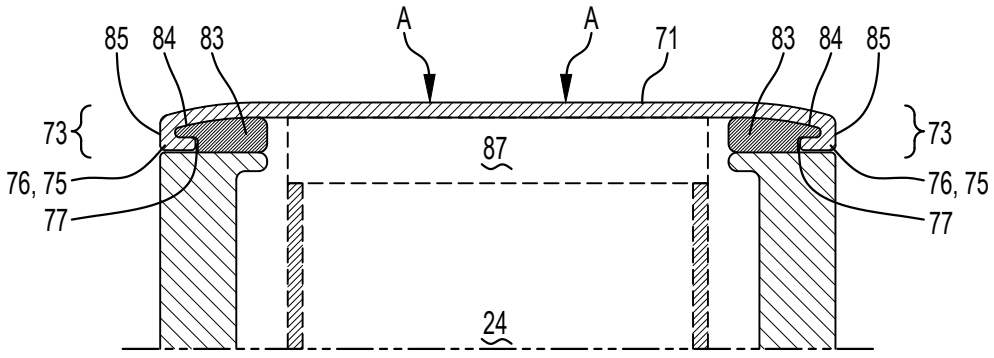

Figure 7D

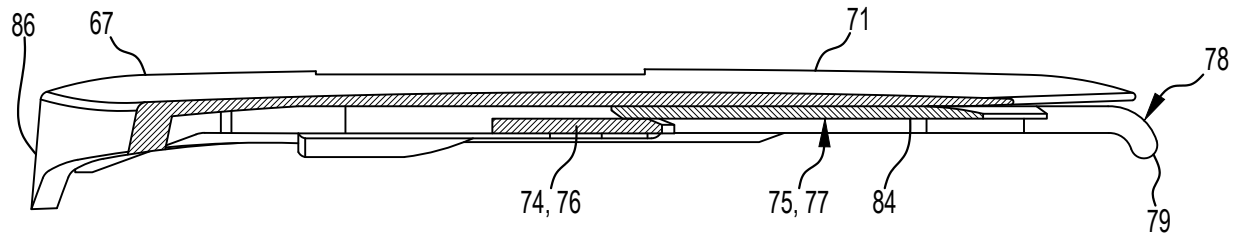

Figure 7E

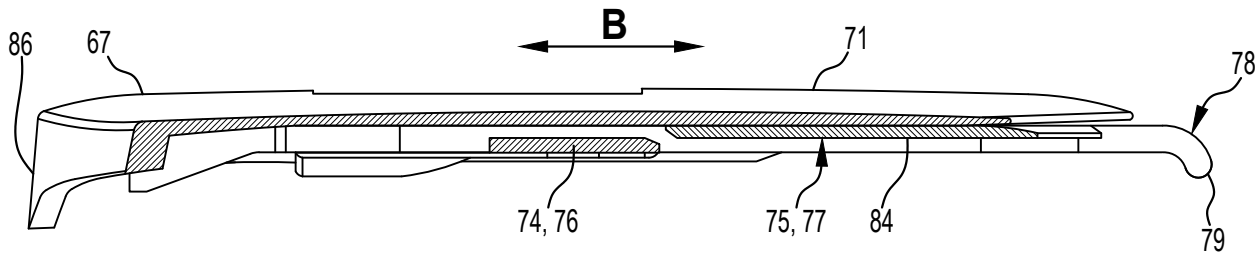

Figure 7F

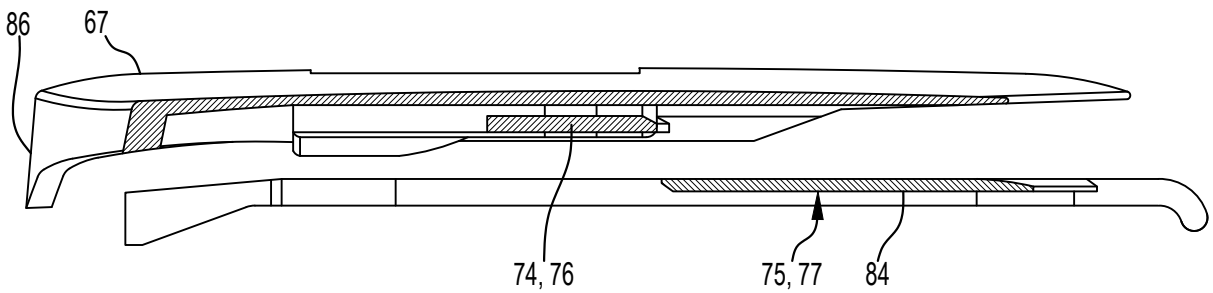

Figure 7G

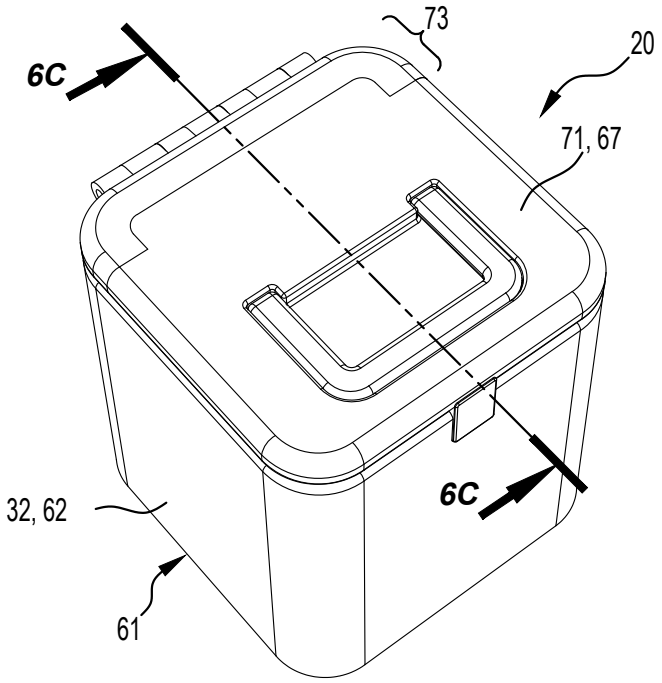

Figure 8A

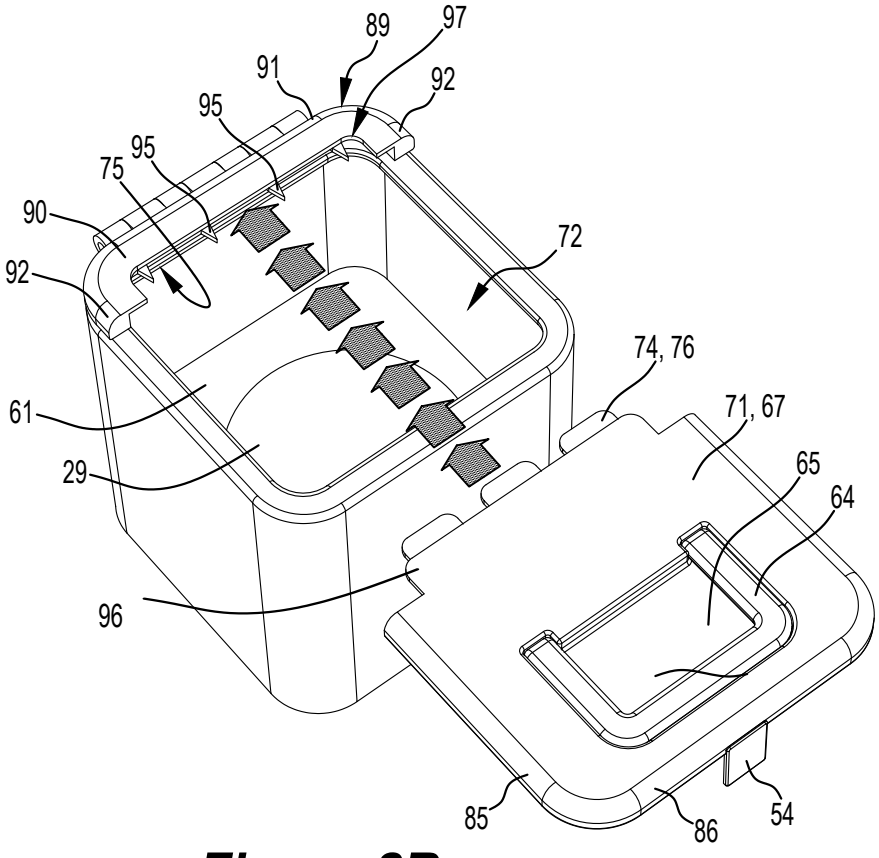

Figure 8B

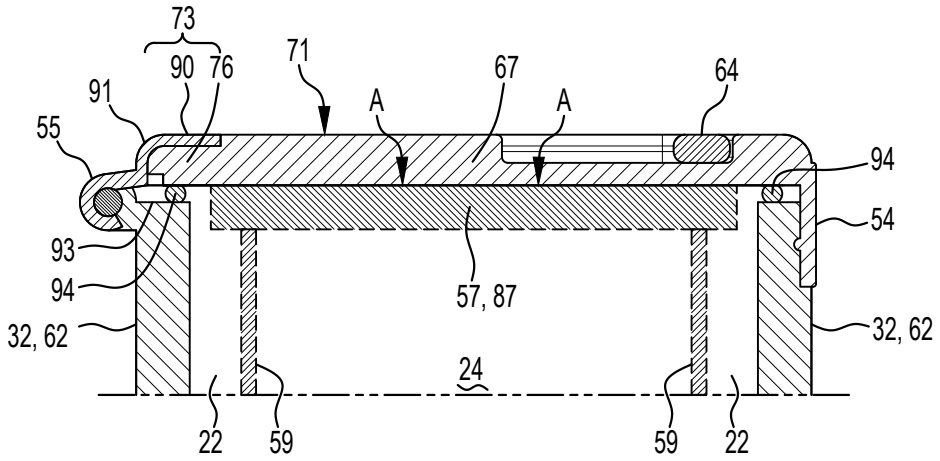

Figure 8C

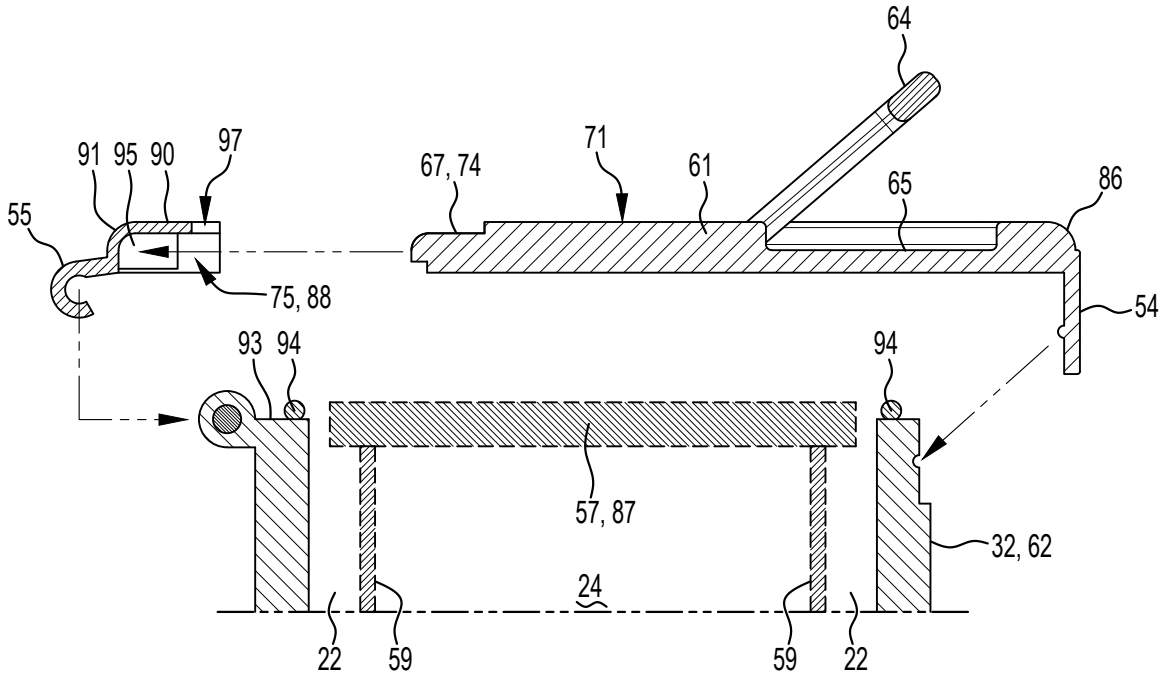

Figure 8D

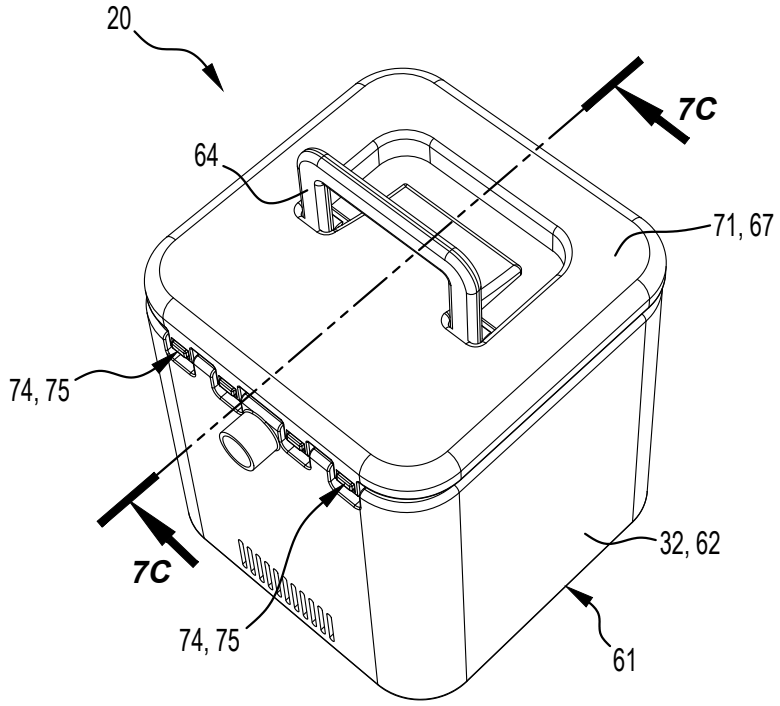

Figure 9A

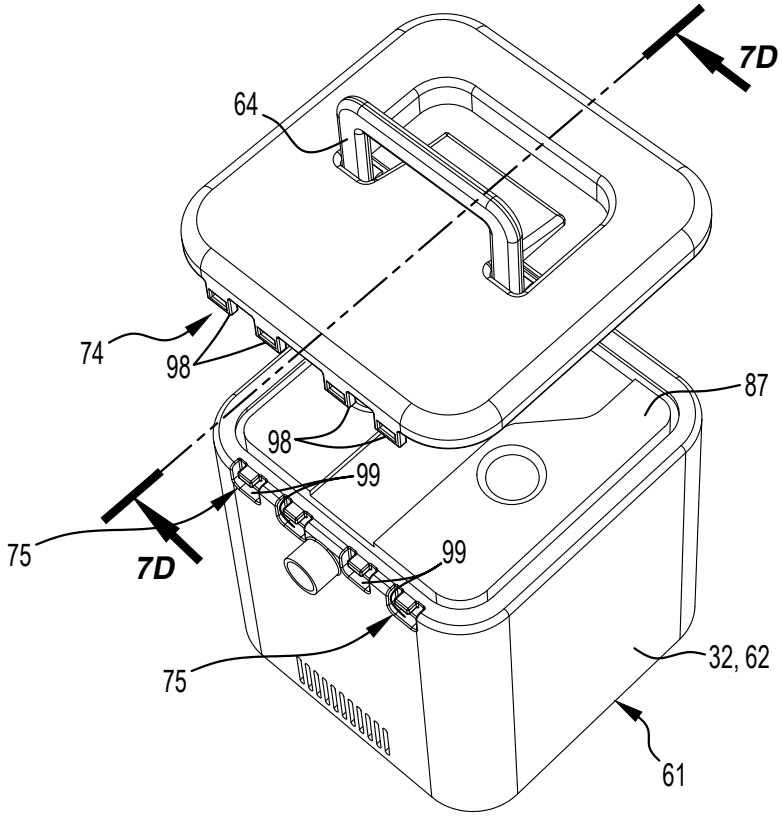

Figure 9B

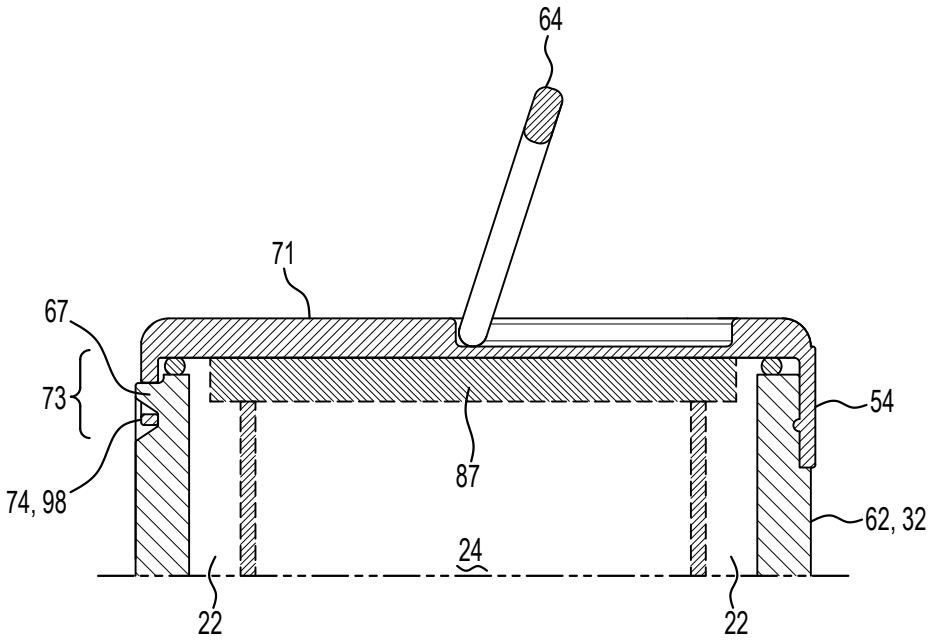

Figure 9C

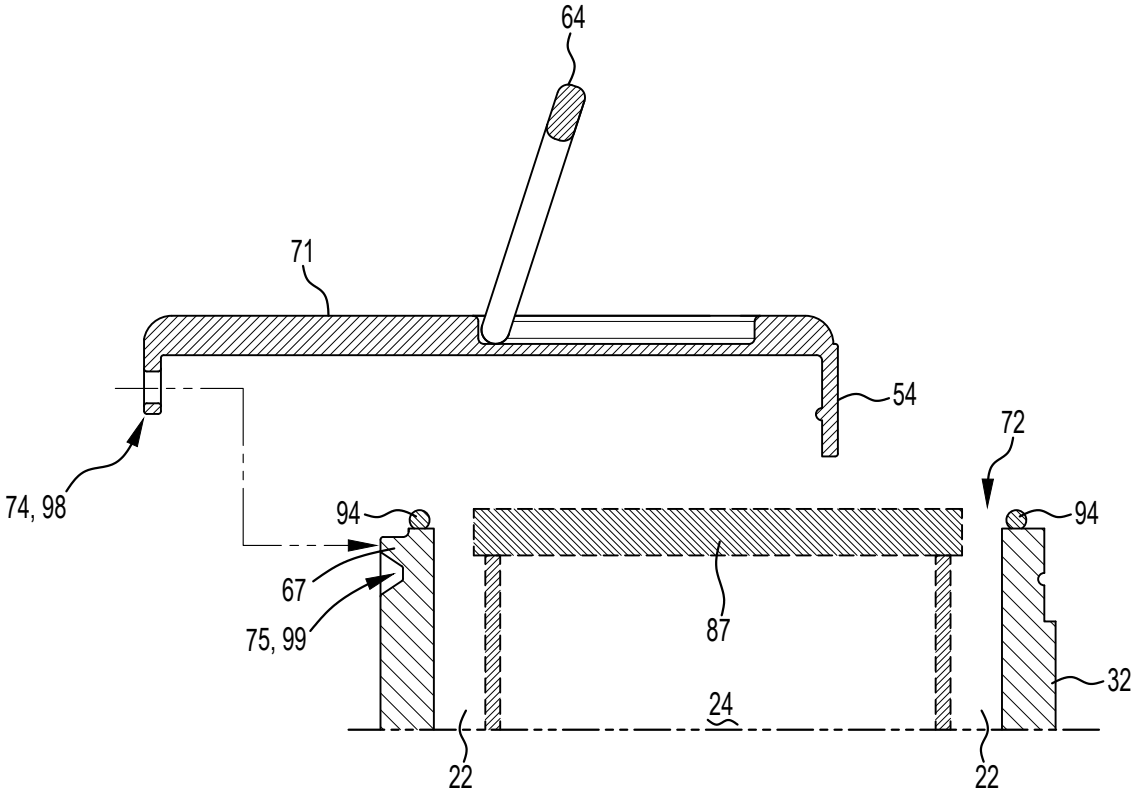

Figure 9D

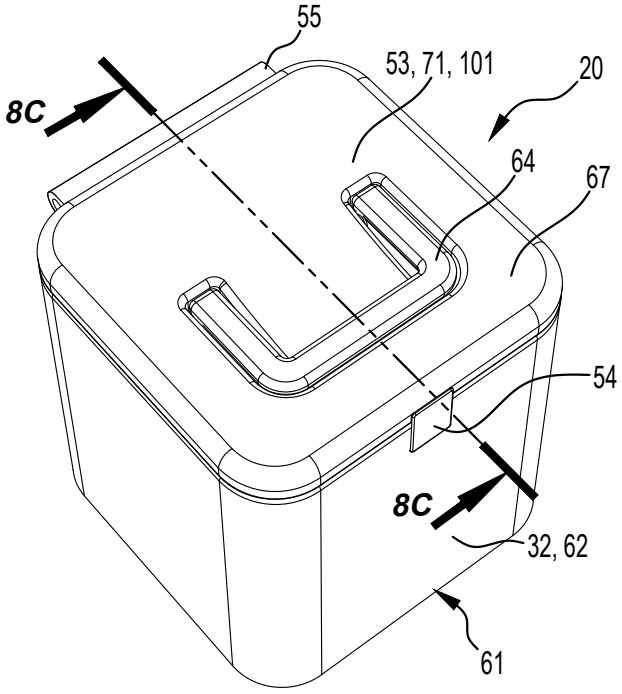

Figure 10A

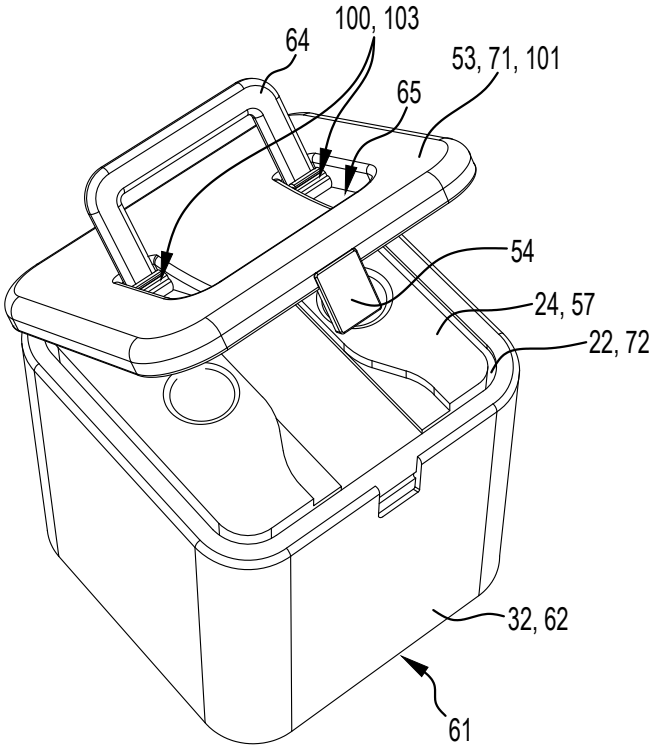

Figure 10B

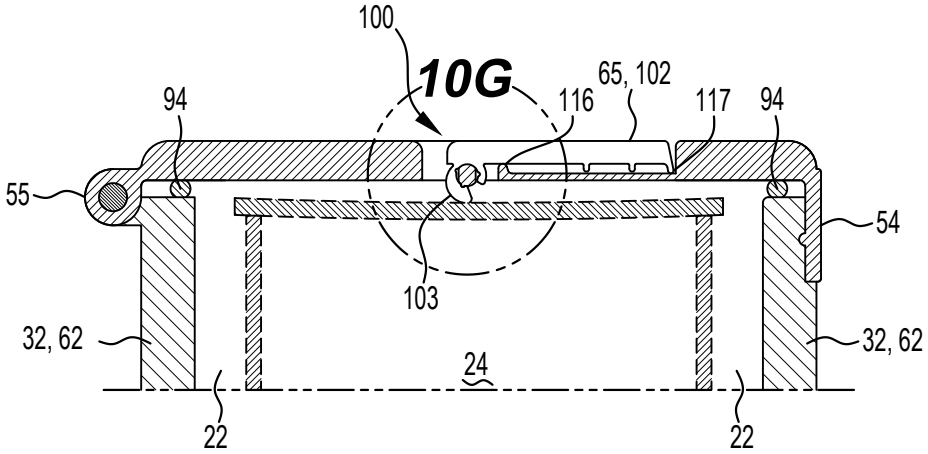

Figure 10C

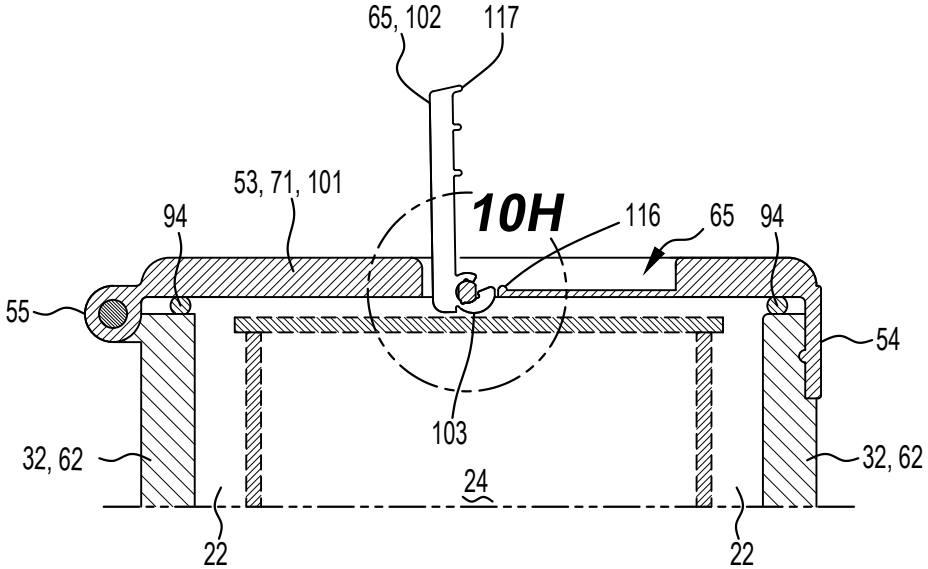

Figure 10D

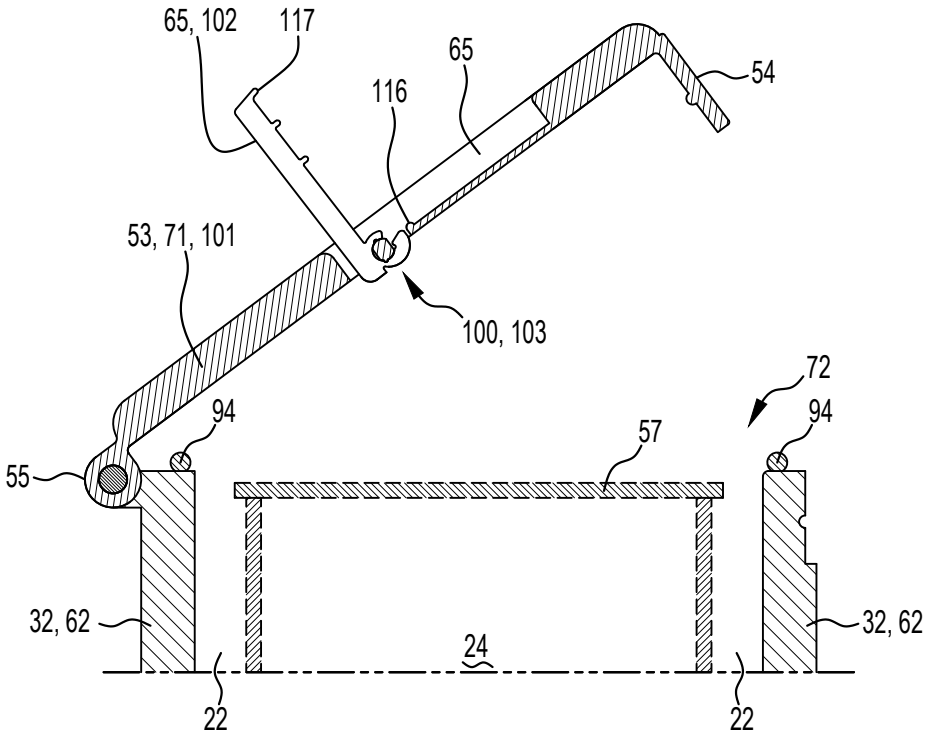

Figure 10E

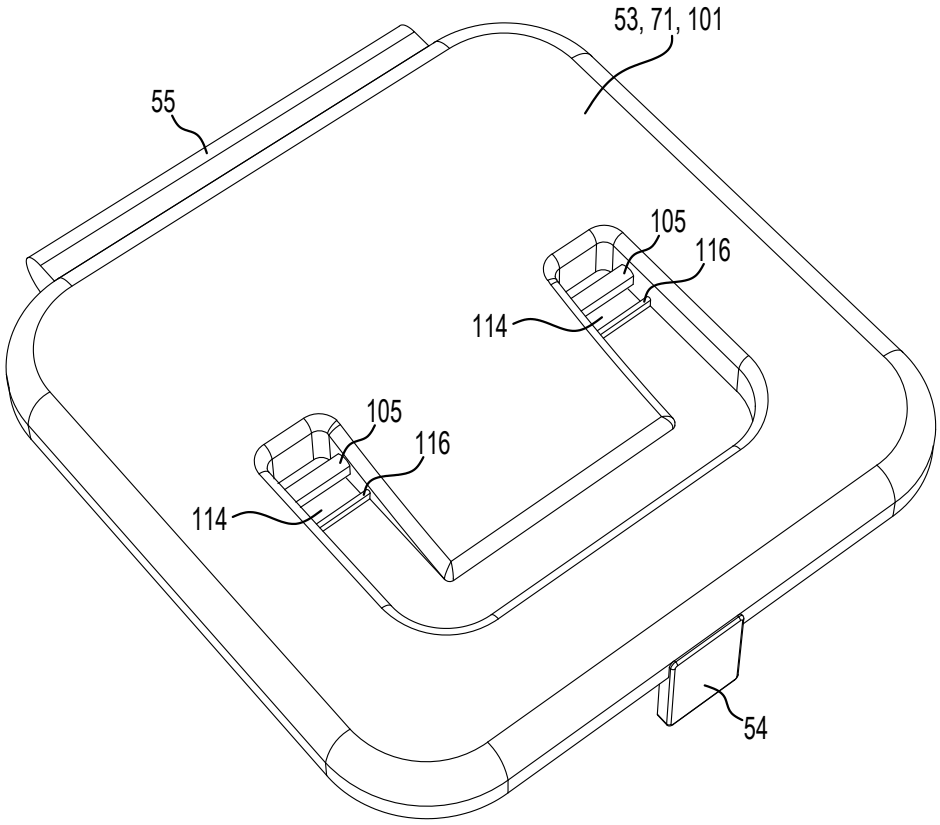

Figure 10F

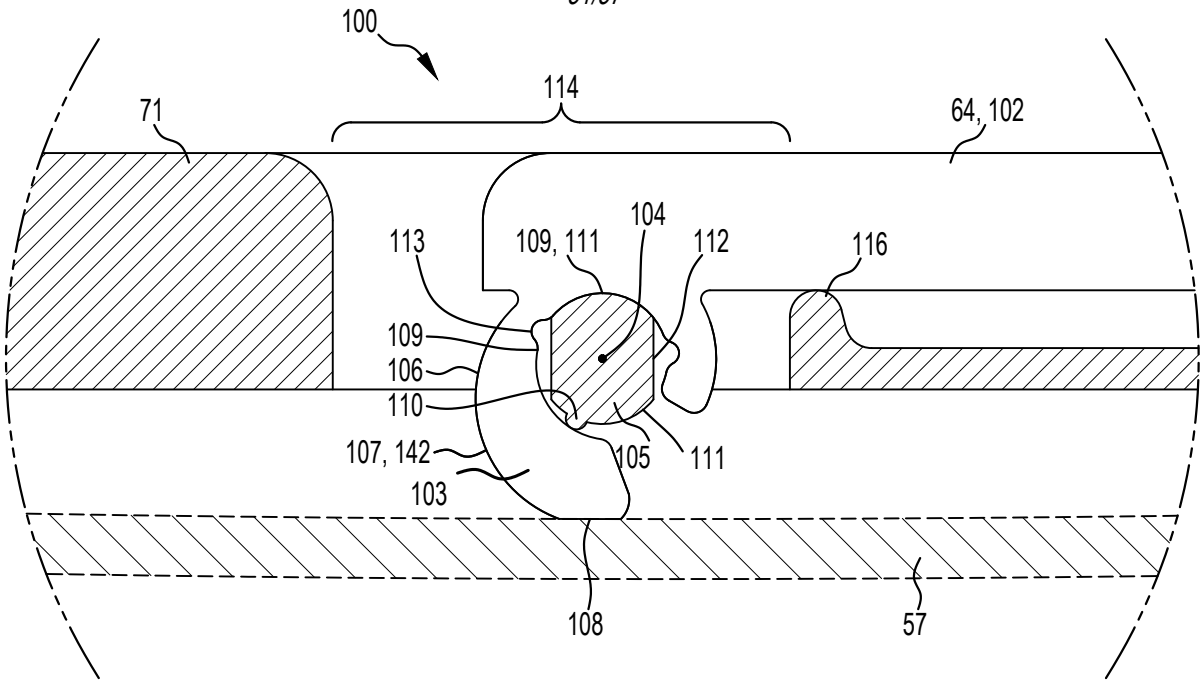

Figure 10G

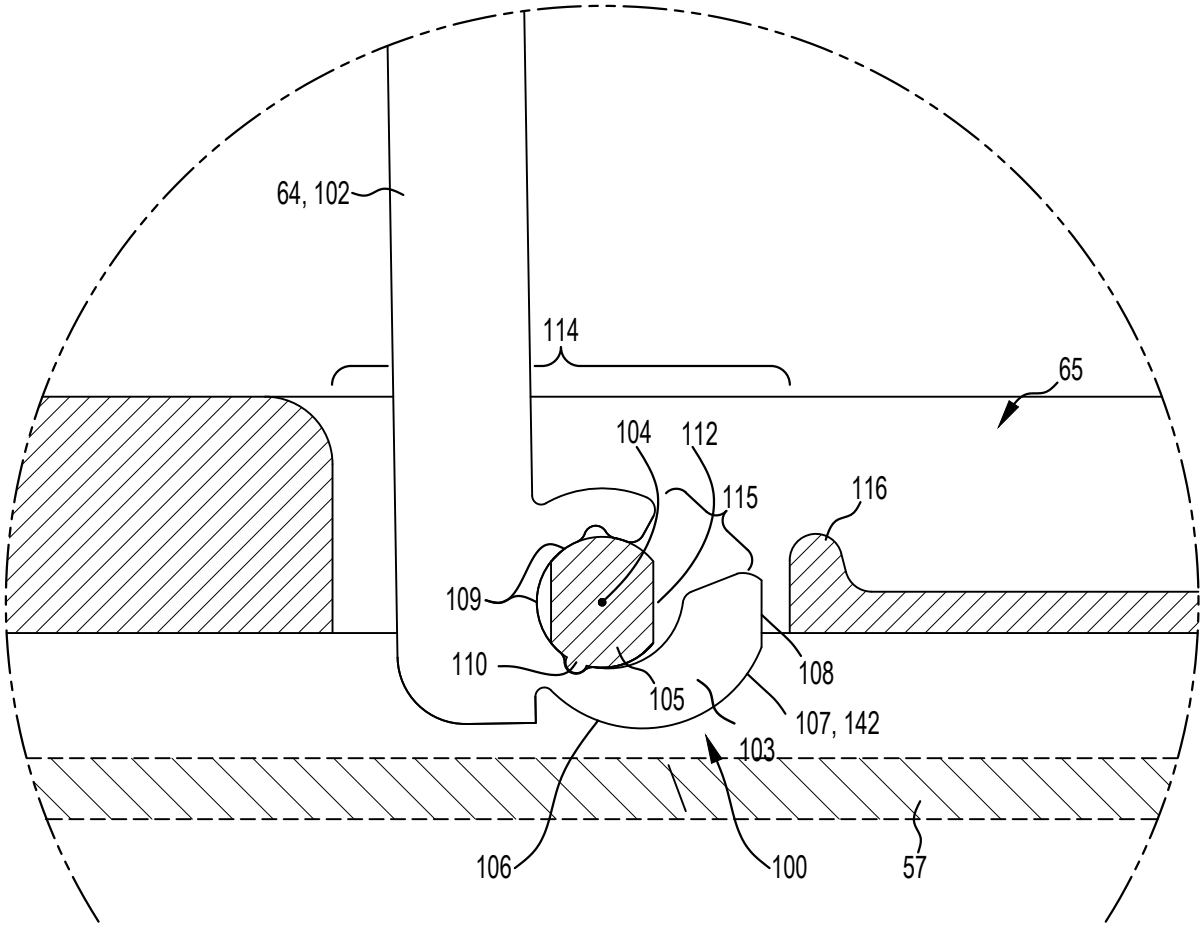

Figure 10H

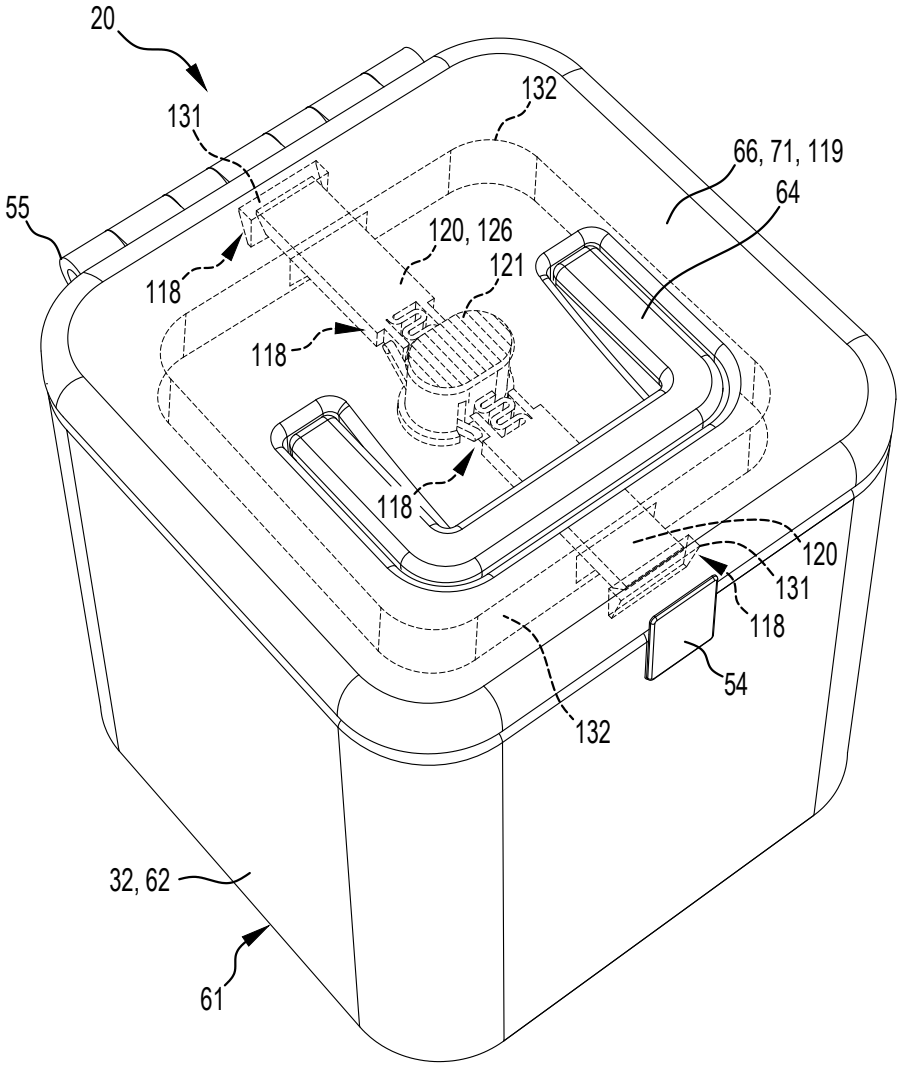

Figure 11A

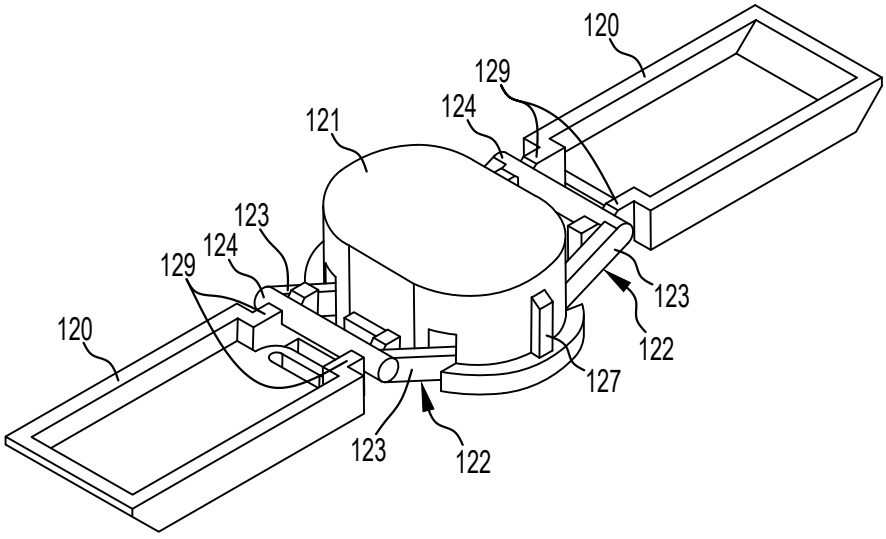

Figure 11B

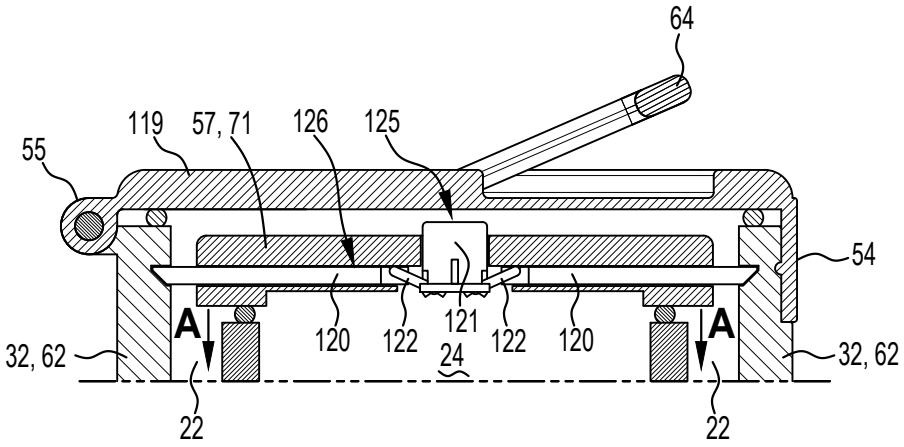

Figure 11C

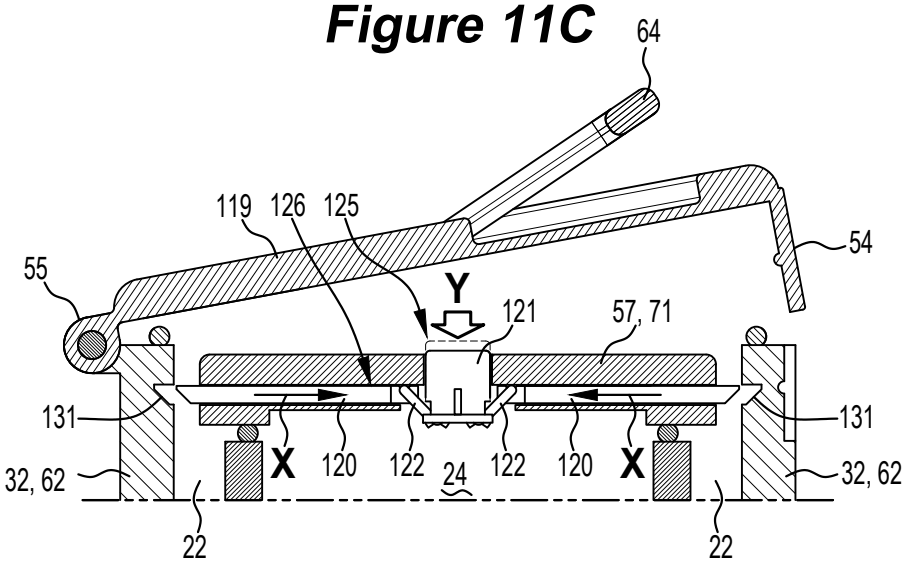

Figure 11D

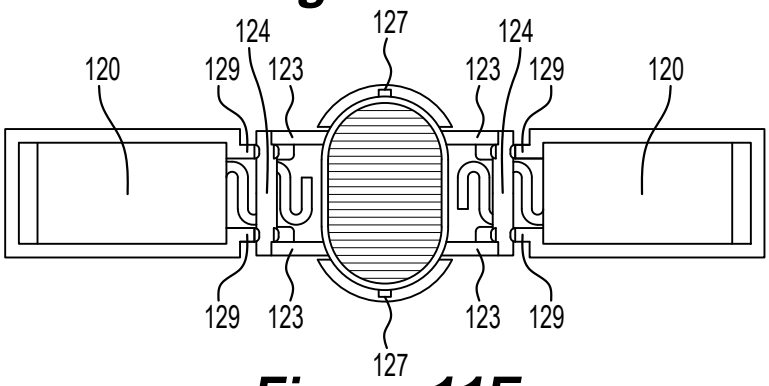

Figure 11E

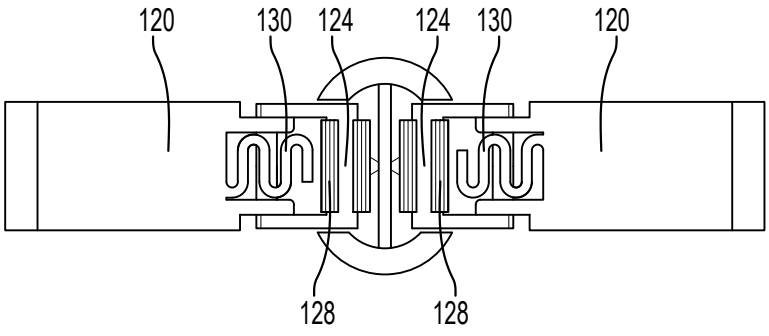

Figure 11F

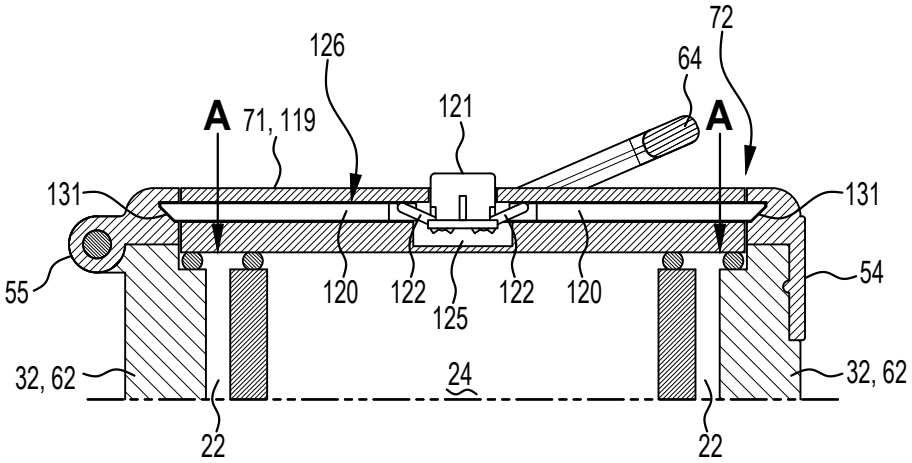

Figure 11G

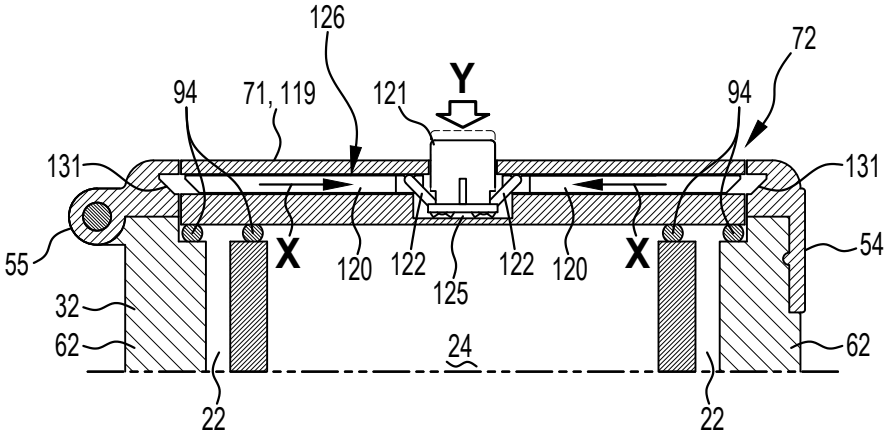

Figure 11H

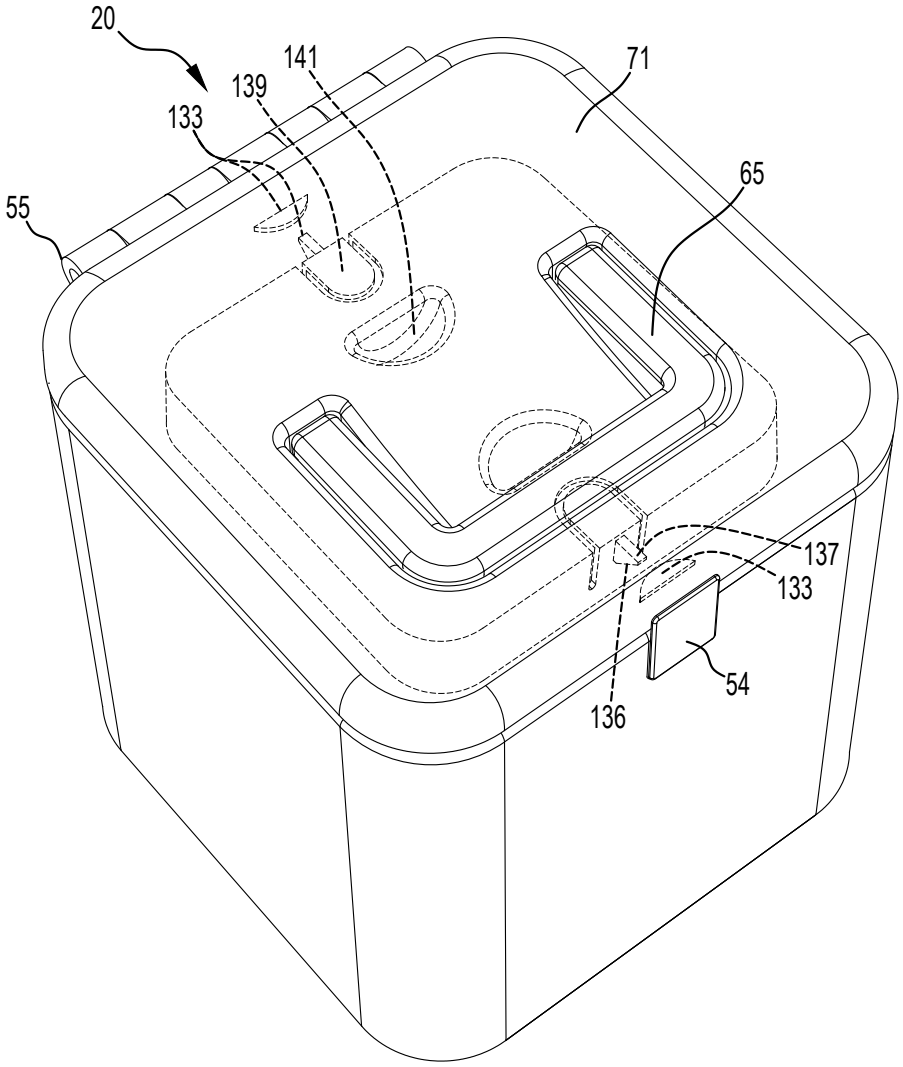

Figure 12A

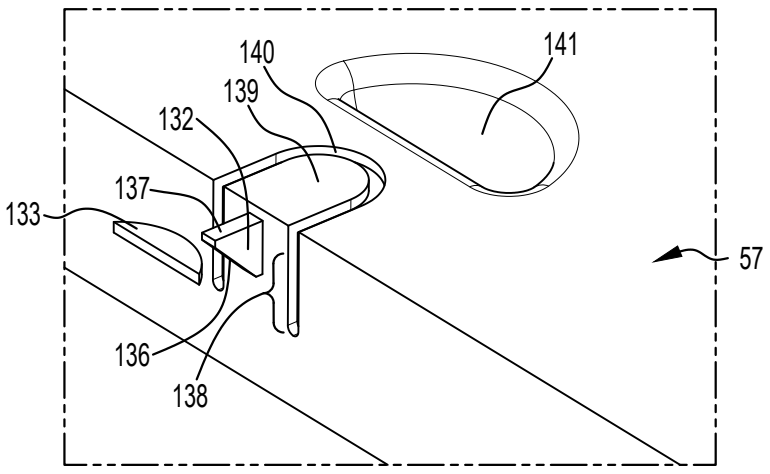

Figure 12B

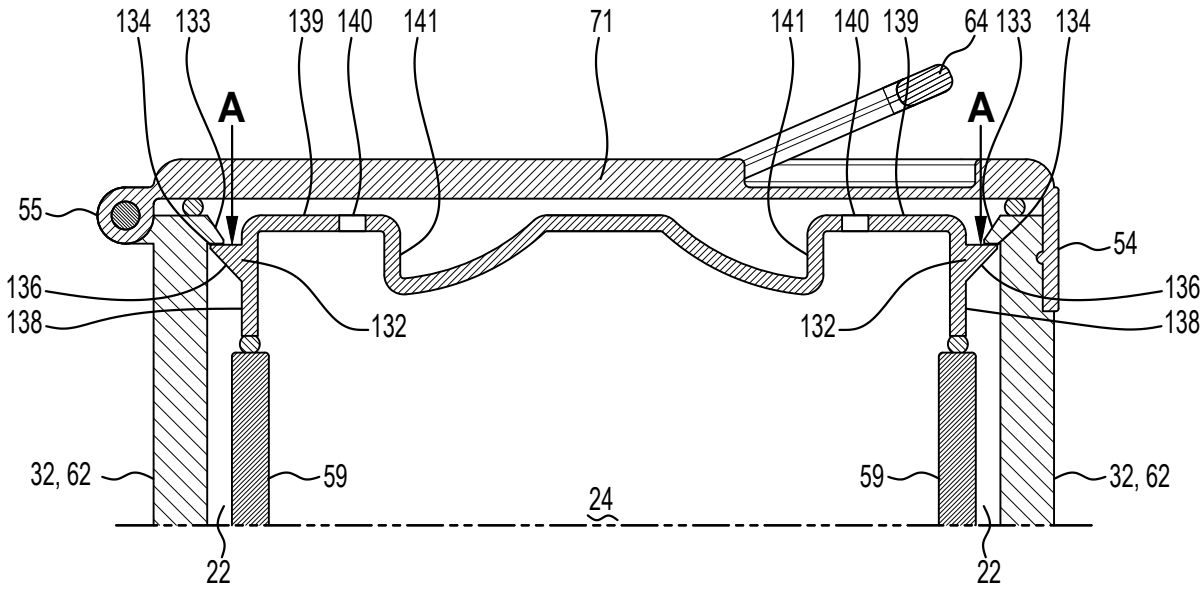

Figure 12C

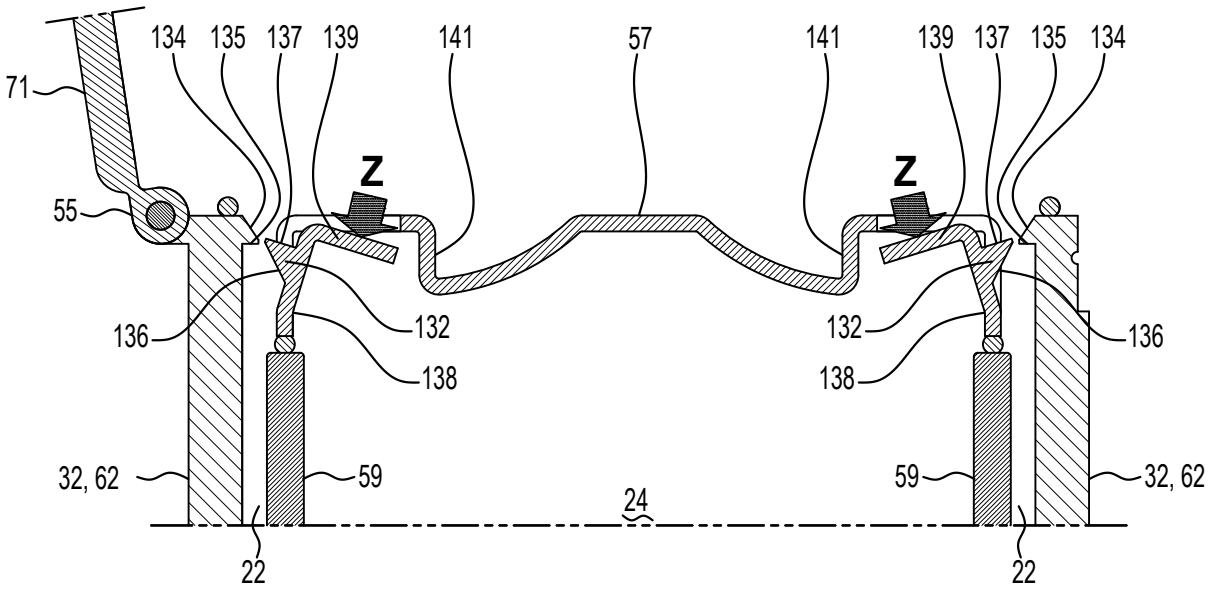

Figure 12D

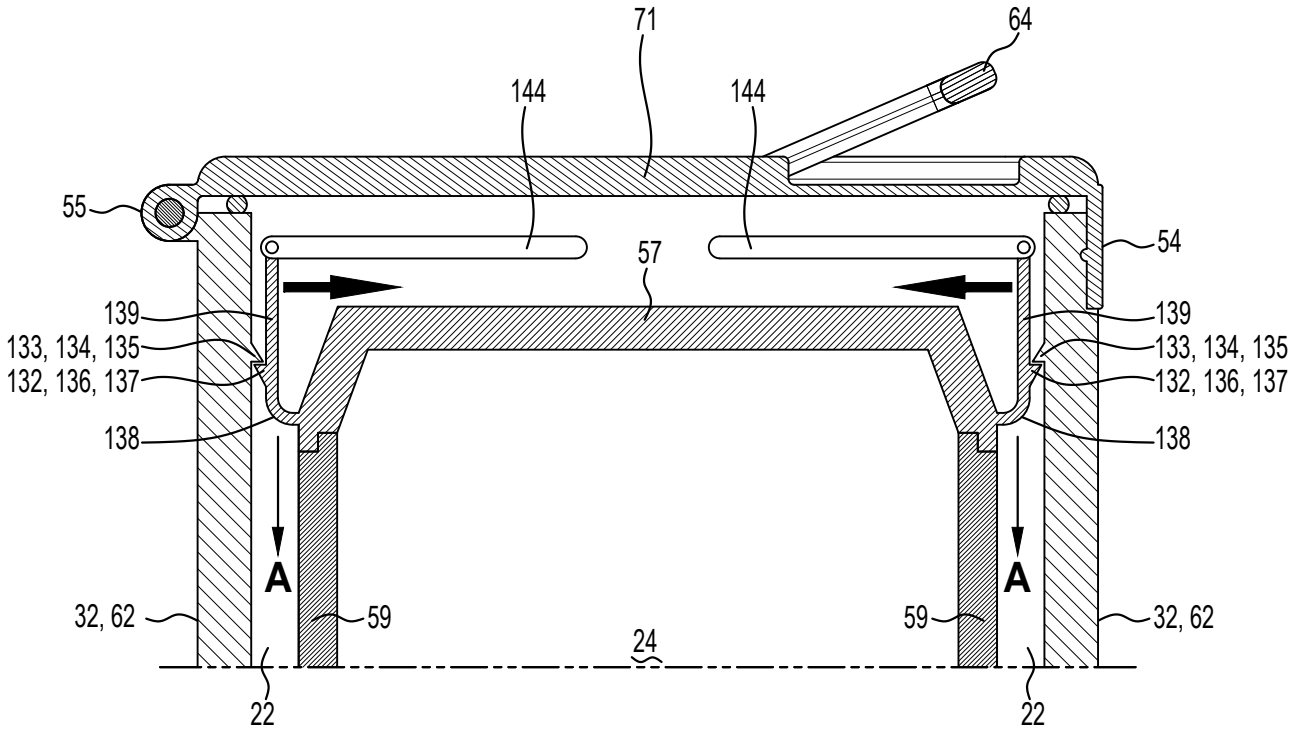

Figure 13A

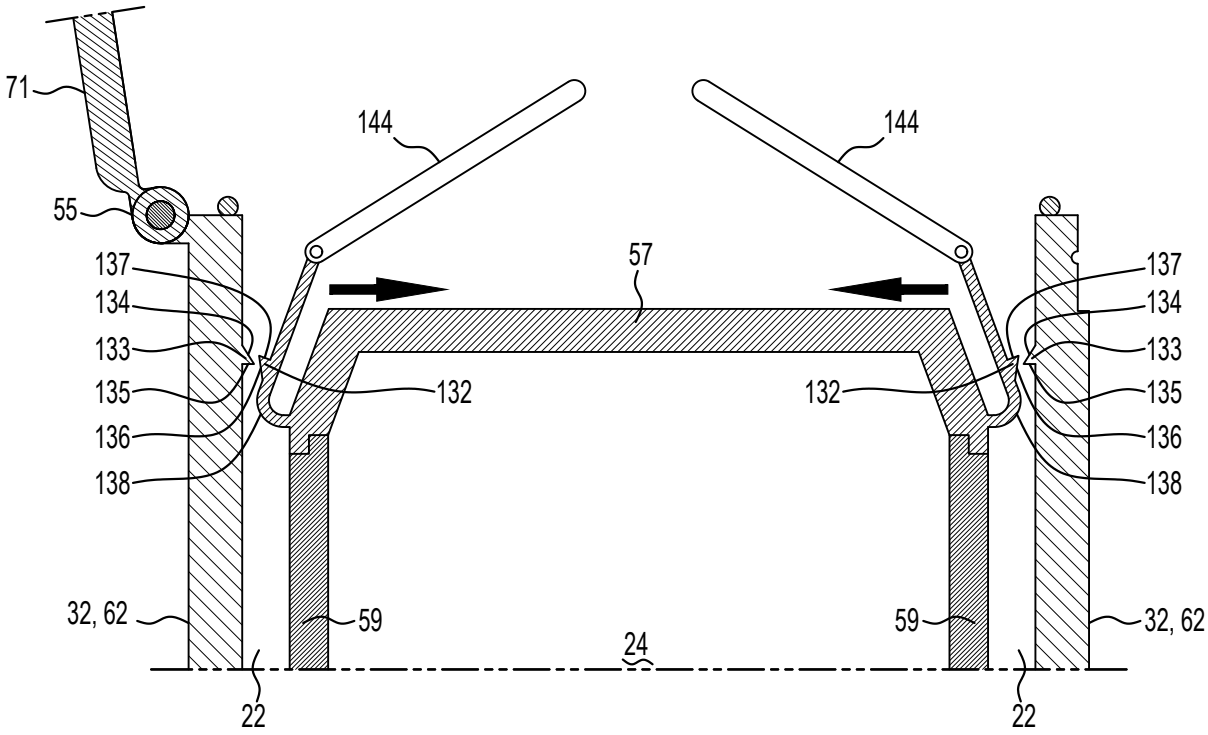

Figure 13B