FIG. 1

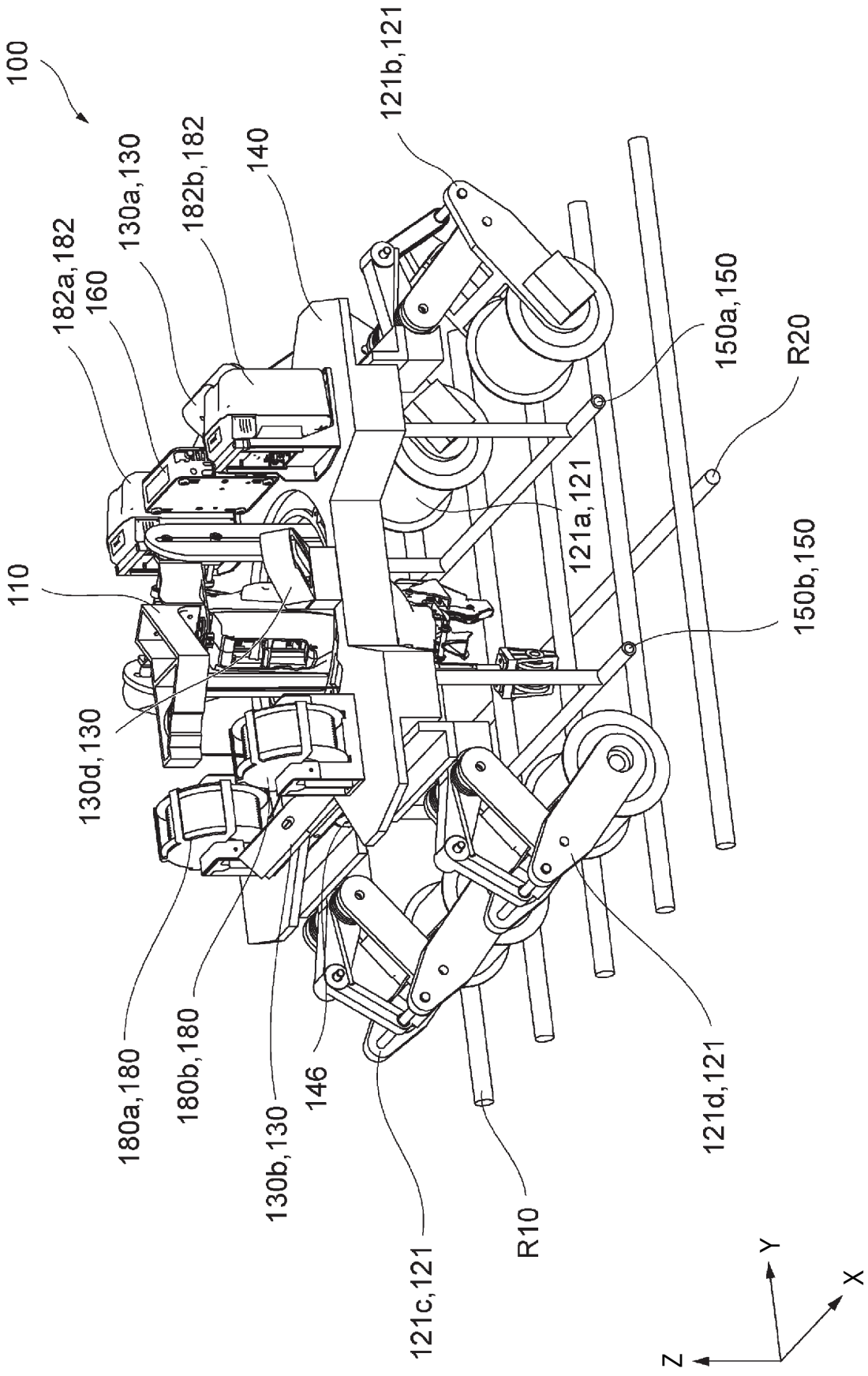
100
121b,121
182a,182
160
130a,130
182b,182
140
150a,150
R20
110
121a,121
150b,150
130d,130
180a,180
180b,180
146
130b,130
121d,121
121c,121
R10
Y
X
Z

FIG. 2

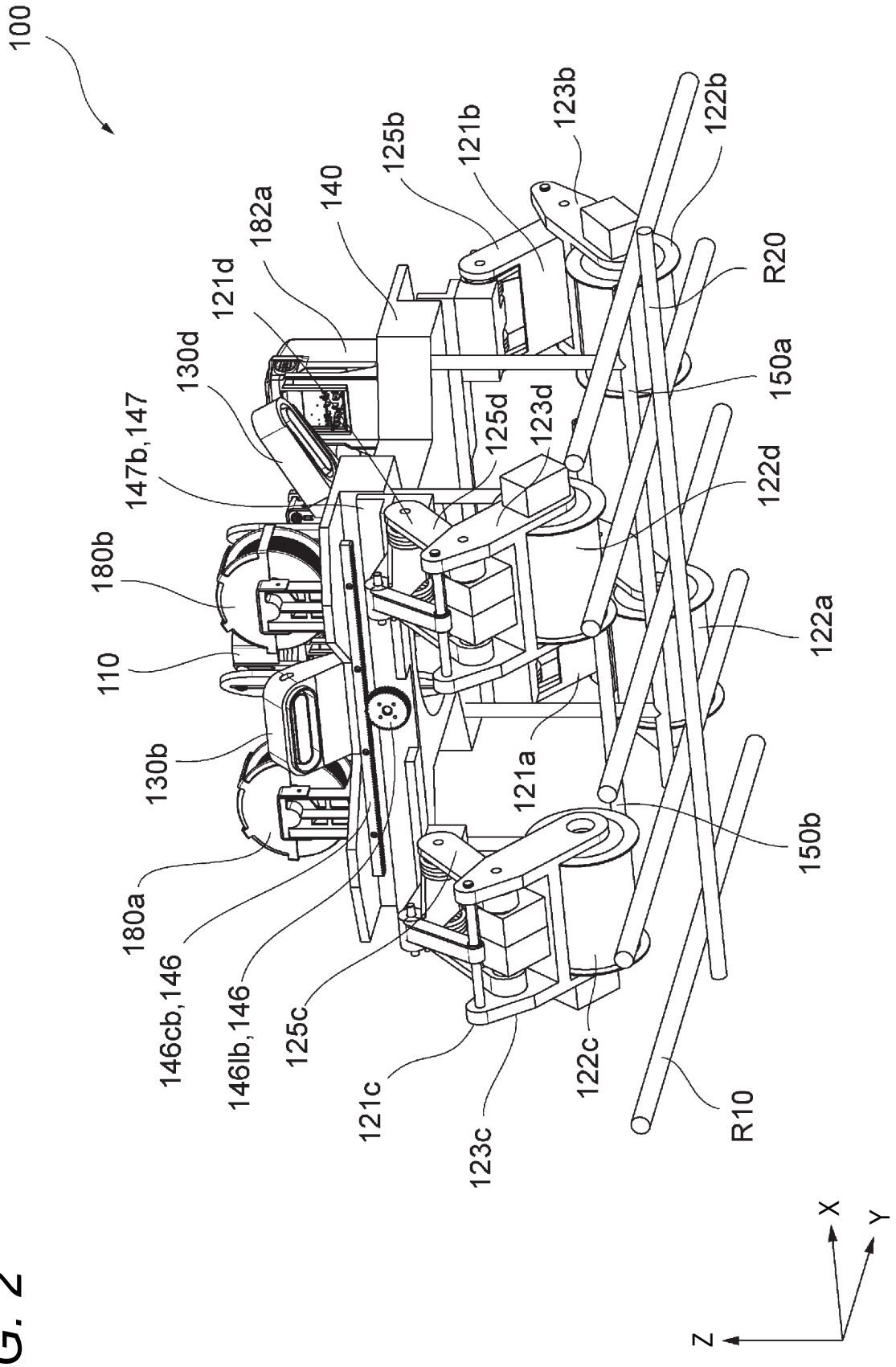
100
180a
146cb,146
146lb,146
125c
121c
123c
122c
R10
180b
110
130b
147b,147
130d
121d
182a
140
125b
121b
123b
122b
R20
150a
125d
123d
122d
122a
121a
150b
Z
X
Y

FIG. 3

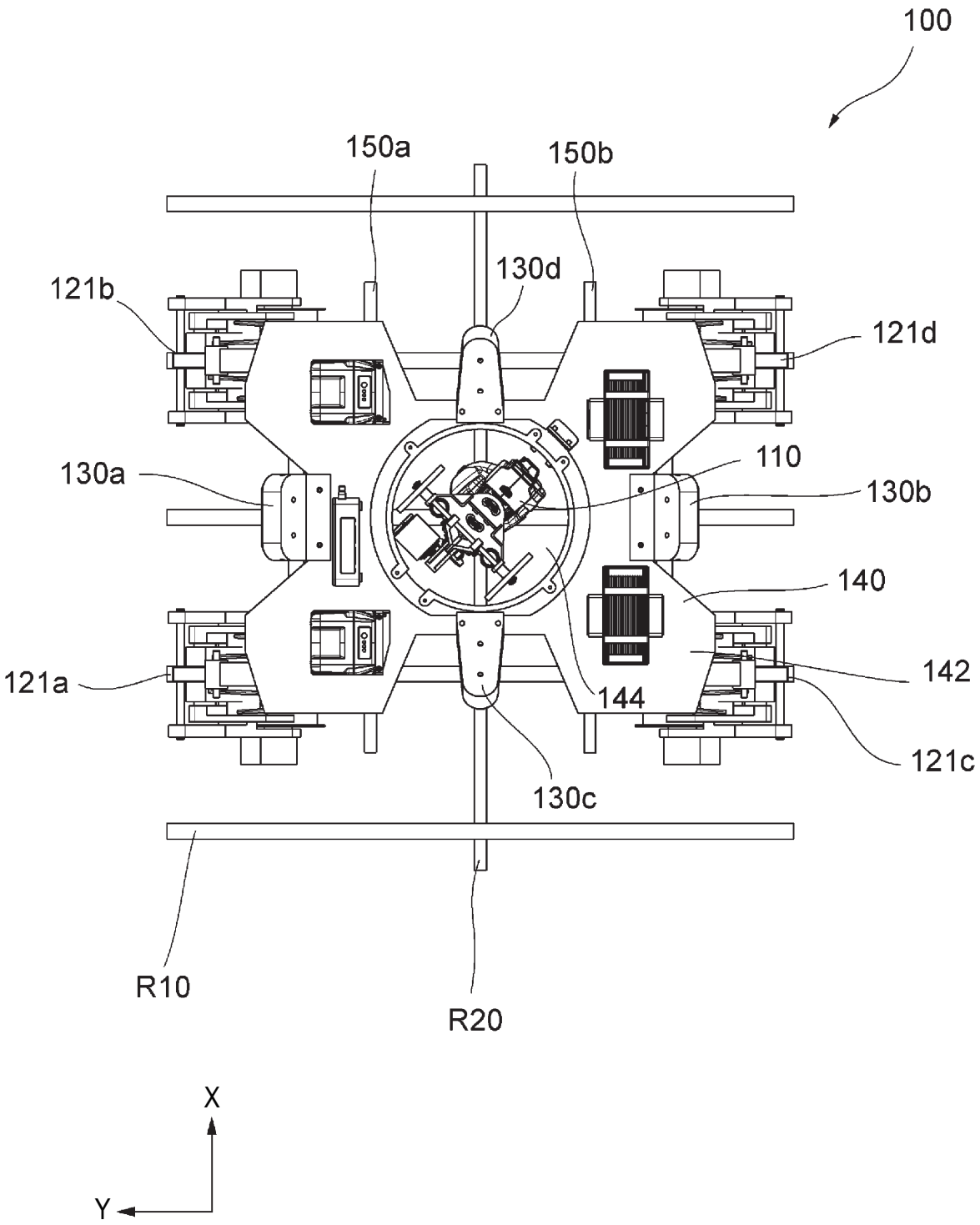
100
150a
150b
130d
121b
121d
130a
110
130b
140
121a
144
142
121c
130c
R10
R20
X
Y

FIG. 4

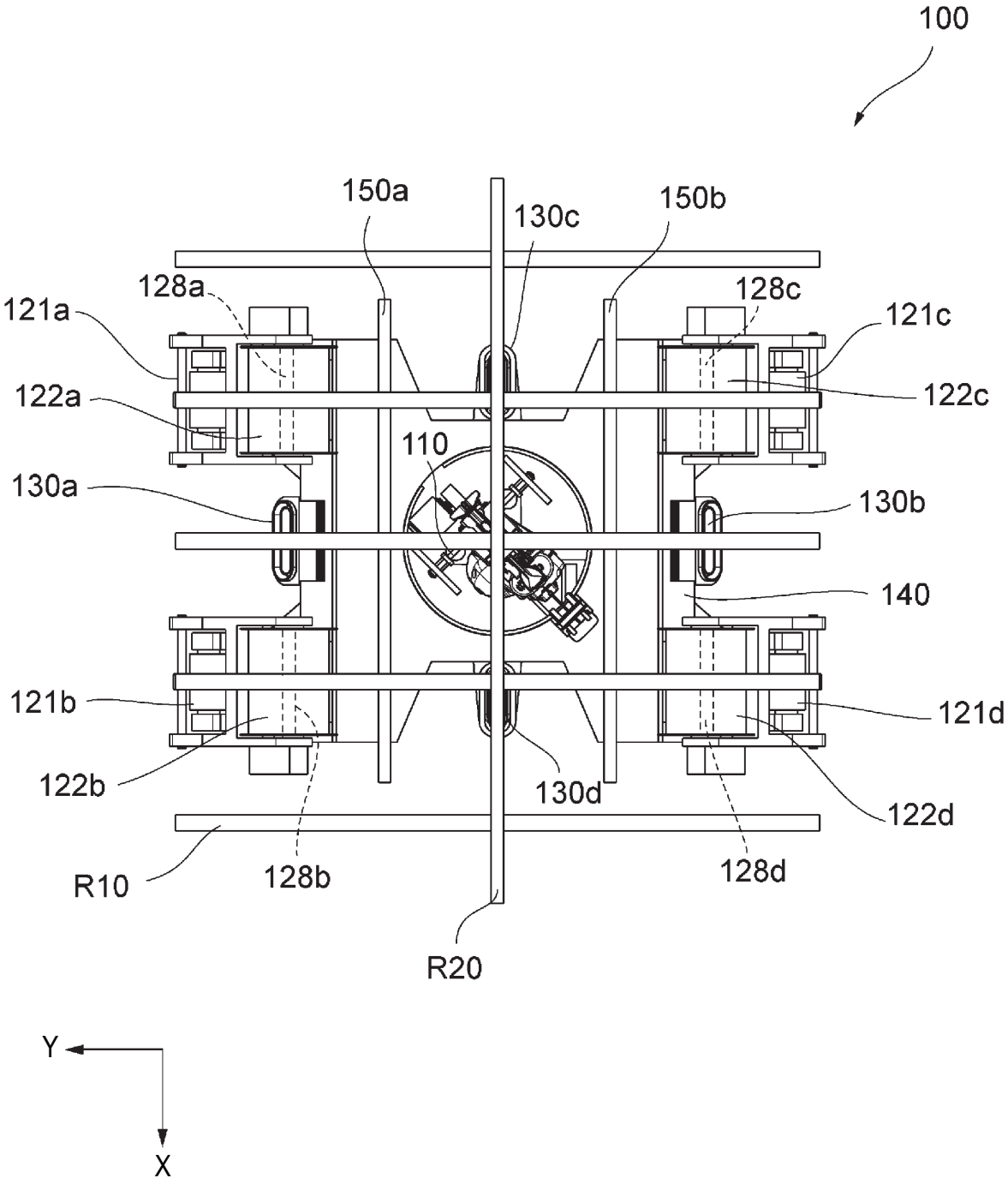
100
150a
130c
150b
128a
128c
121a
121c
122a
122c
110
130a
130b
140
121b
121d
122b
130d
122d
R10
128b
128d
R20
Y
X

FIG. 5

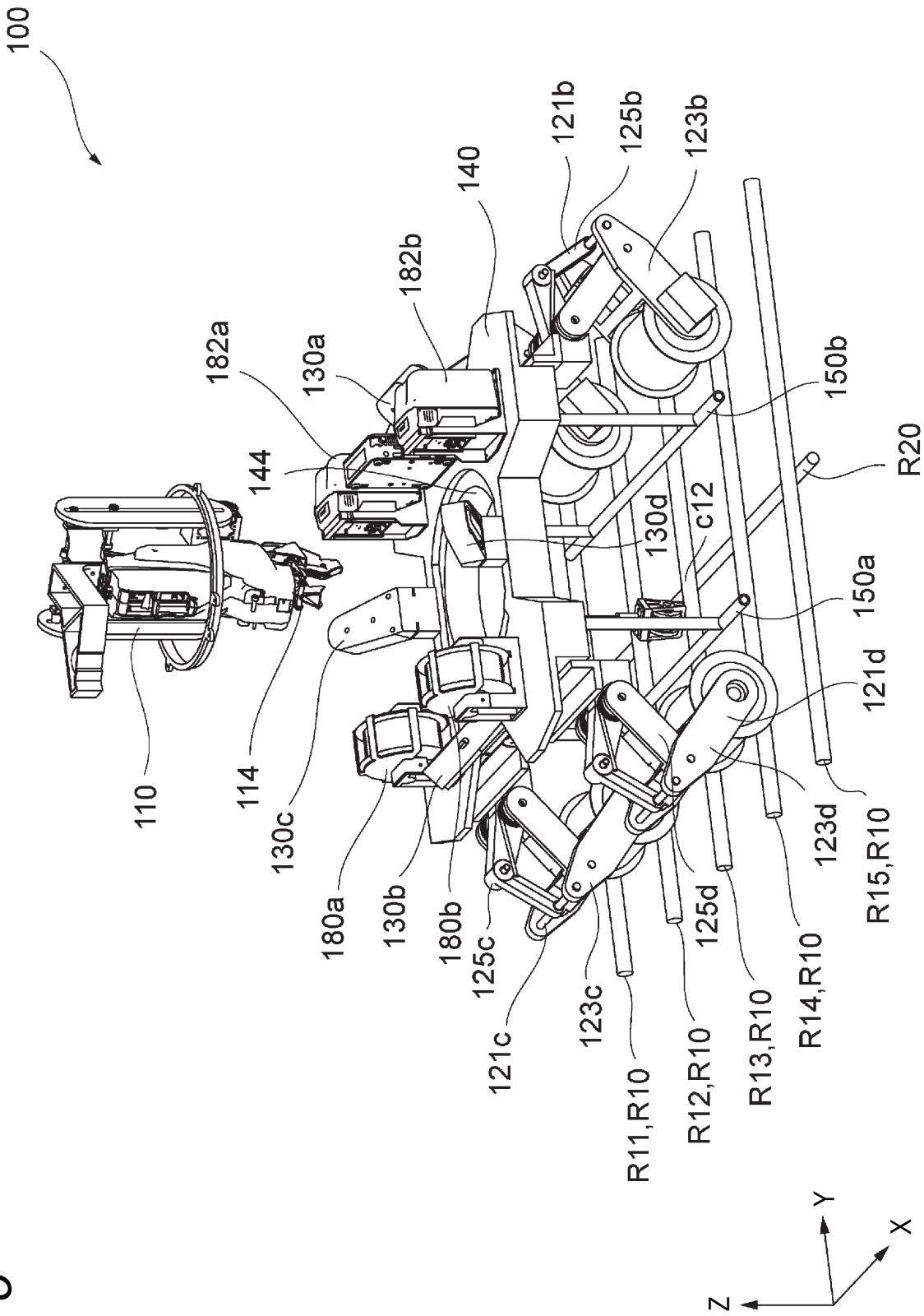
100
110
114
130c
180a
130b
180b
125c
121c
123c
R11,R10
R12,R10
125d
R13,R10
R14,R10
123d
R15,R10
121d
150a
130d
c12
R20
150b
123b
125b
121b
140
182b
130a
182a
144
Y
X
Z

FIG. 6

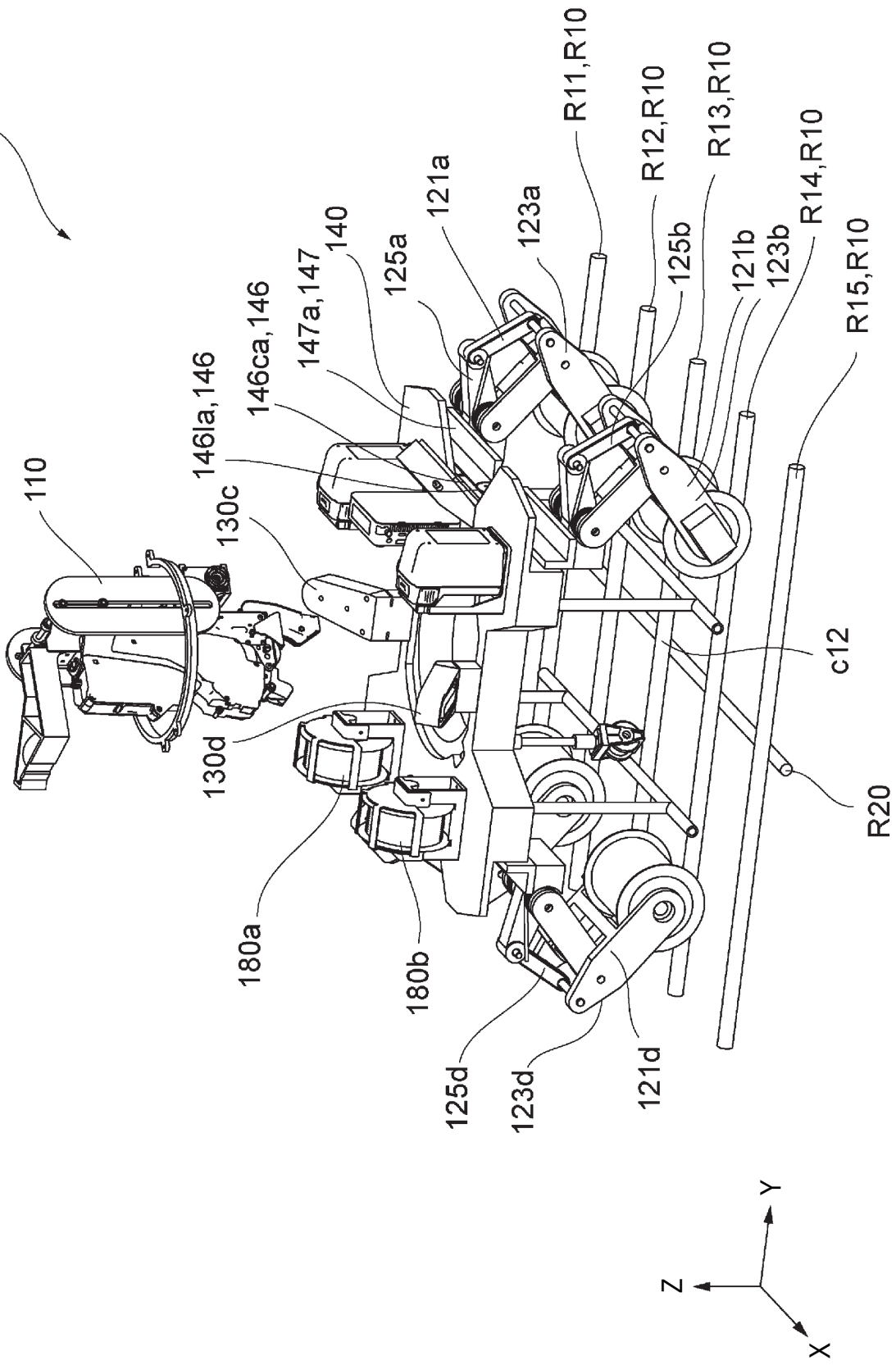
100
110
130c
146la,146
146ca,146
147a,147
140
125a
121a
123a
R11,R10
R12,R10
R13,R10
R14,R10
R15,R10
125b
121b
123b
c12
R20
130d
180a
180b
125d
123d
121d
Y
Z
X

FIG. 7

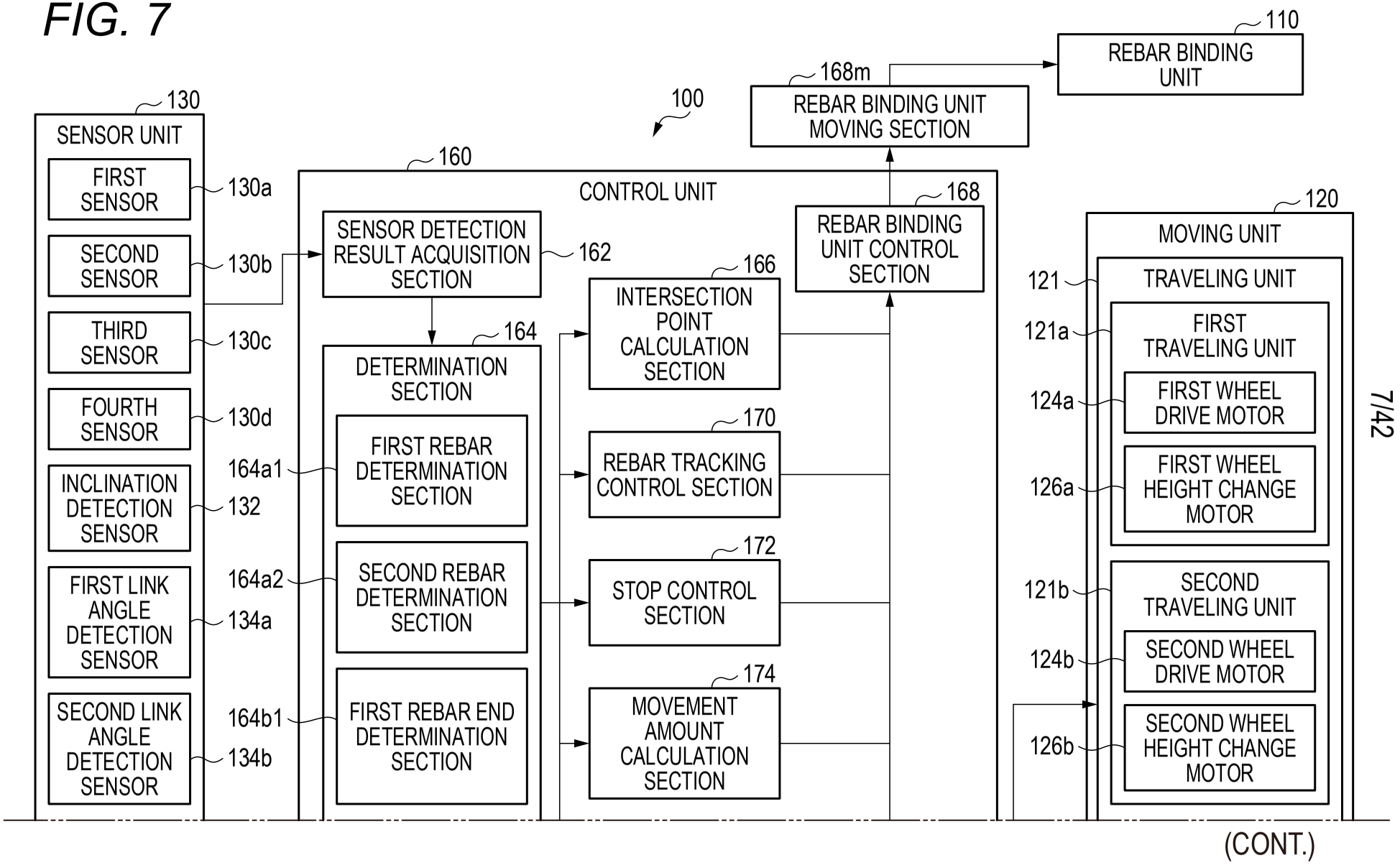
100
110
REBAR BINDING UNIT
168m
REBAR BINDING UNIT MOVING SECTION
130
SENSOR UNIT
FIRST SENSOR
130a
SECOND SENSOR
130b
THIRD SENSOR
130c
FOURTH SENSOR
130d
INCLINATION DETECTION SENSOR
132
FIRST LINK ANGLE DETECTION SENSOR
134a
SECOND LINK ANGLE DETECTION SENSOR
134b
160
CONTROL UNIT
SENSOR DETECTION RESULT ACQUISITION SECTION
162
164
DETERMINATION SECTION
164a1
FIRST REBAR DETERMINATION SECTION
164a2
SECOND REBAR DETERMINATION SECTION
164b1
FIRST REBAR END DETERMINATION SECTION
166
INTERSECTION POINT CALCULATION SECTION
170
REBAR TRACKING CONTROL SECTION
172
STOP CONTROL SECTION
174
MOVEMENT AMOUNT CALCULATION SECTION
168
REBAR BINDING UNIT CONTROL SECTION
120
MOVING UNIT
121
TRAVELING UNIT
121a
FIRST TRAVELING UNIT
124a
FIRST WHEEL DRIVE MOTOR
126a
FIRST WHEEL HEIGHT CHANGE MOTOR
121b
SECOND TRAVELING UNIT
124b
SECOND WHEEL DRIVE MOTOR
126b
SECOND WHEEL HEIGHT CHANGE MOTOR

(CONT.)

(FIG. 7 CONTINUED)

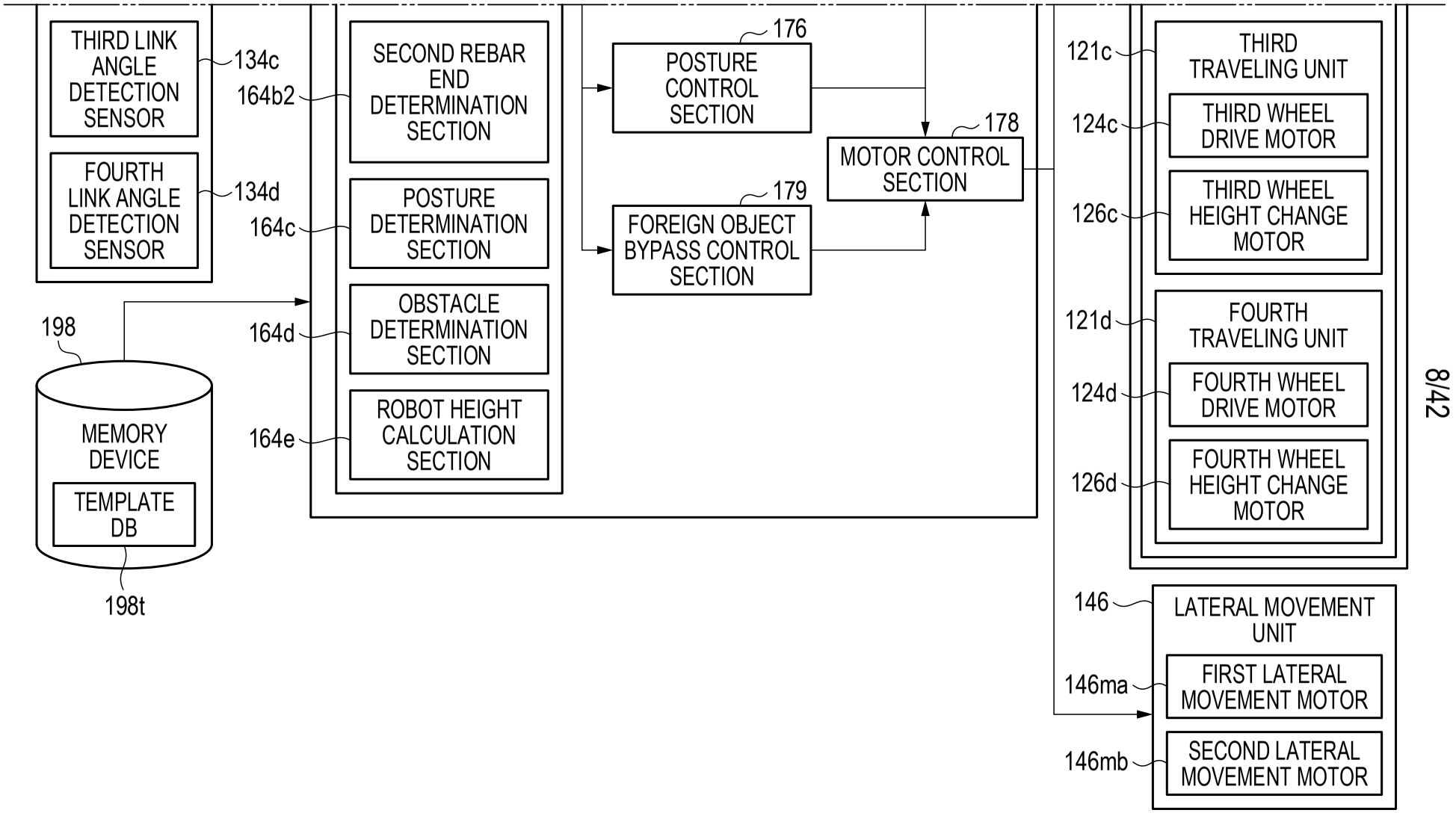

FIG. 8

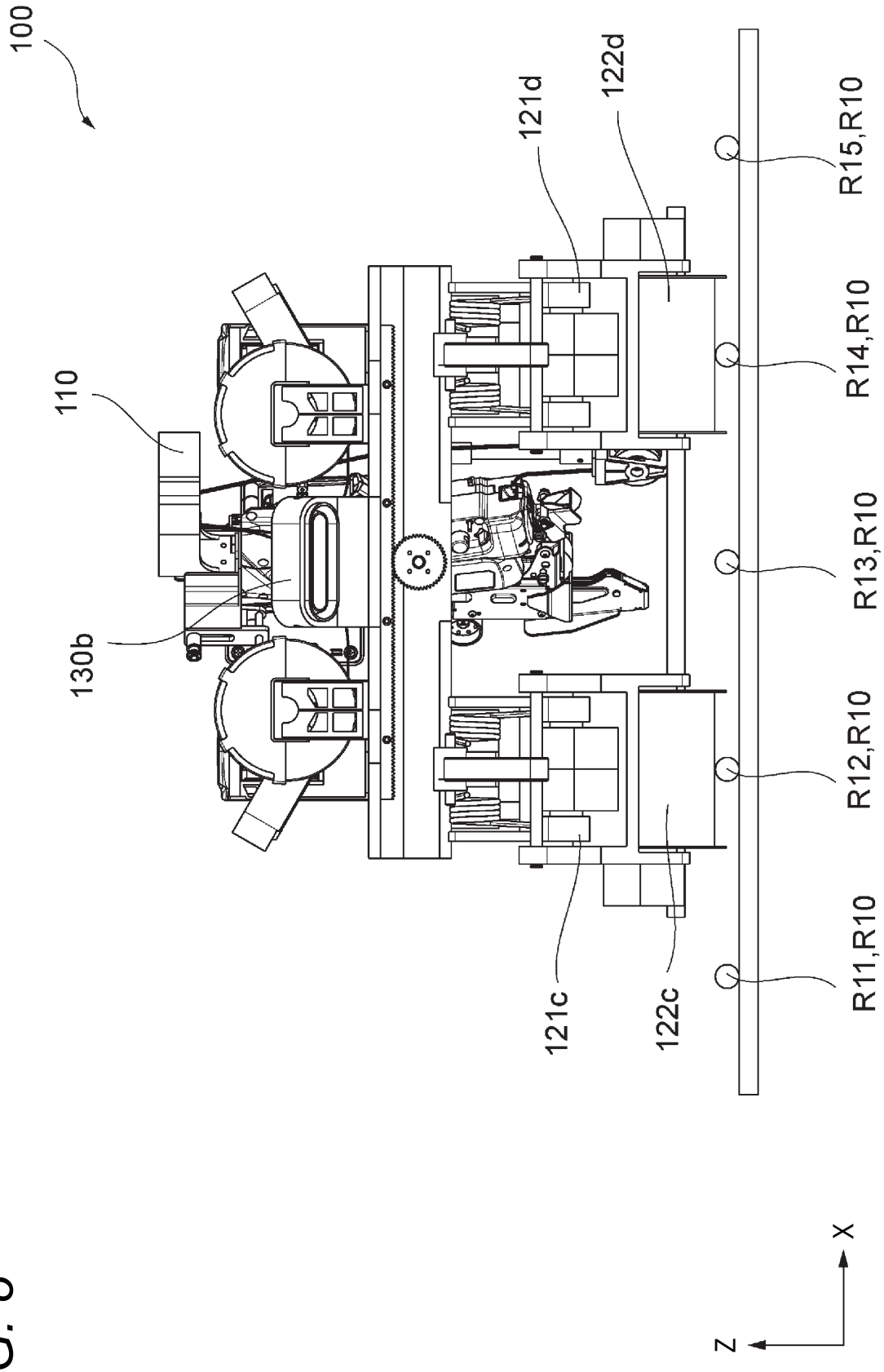
100
110
130b
121d
122d
121c
122c
R15,R10
R14,R10
R13,R10
R12,R10
R11,R10
X
Z

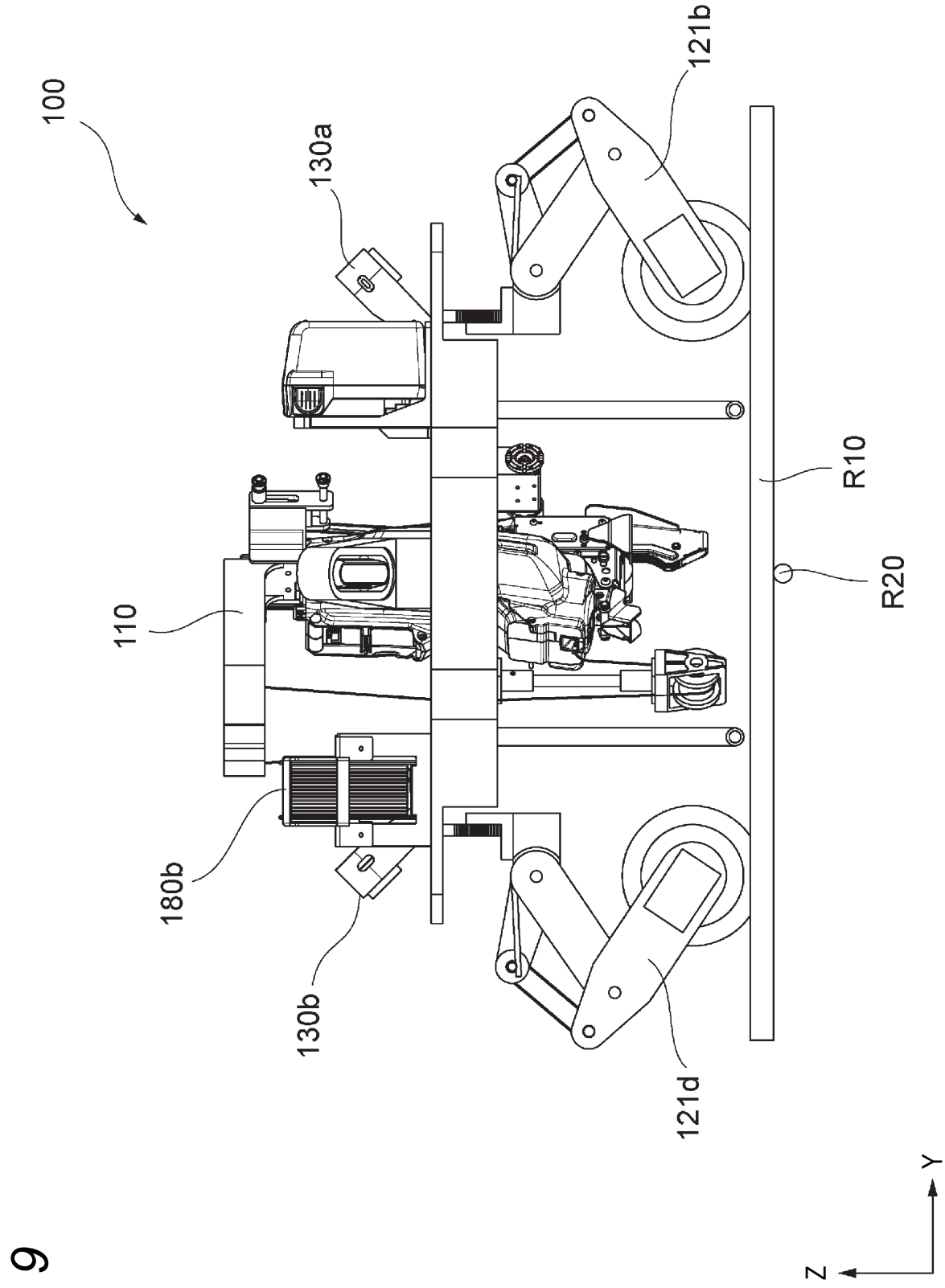

FIG. 9

FIG. 10

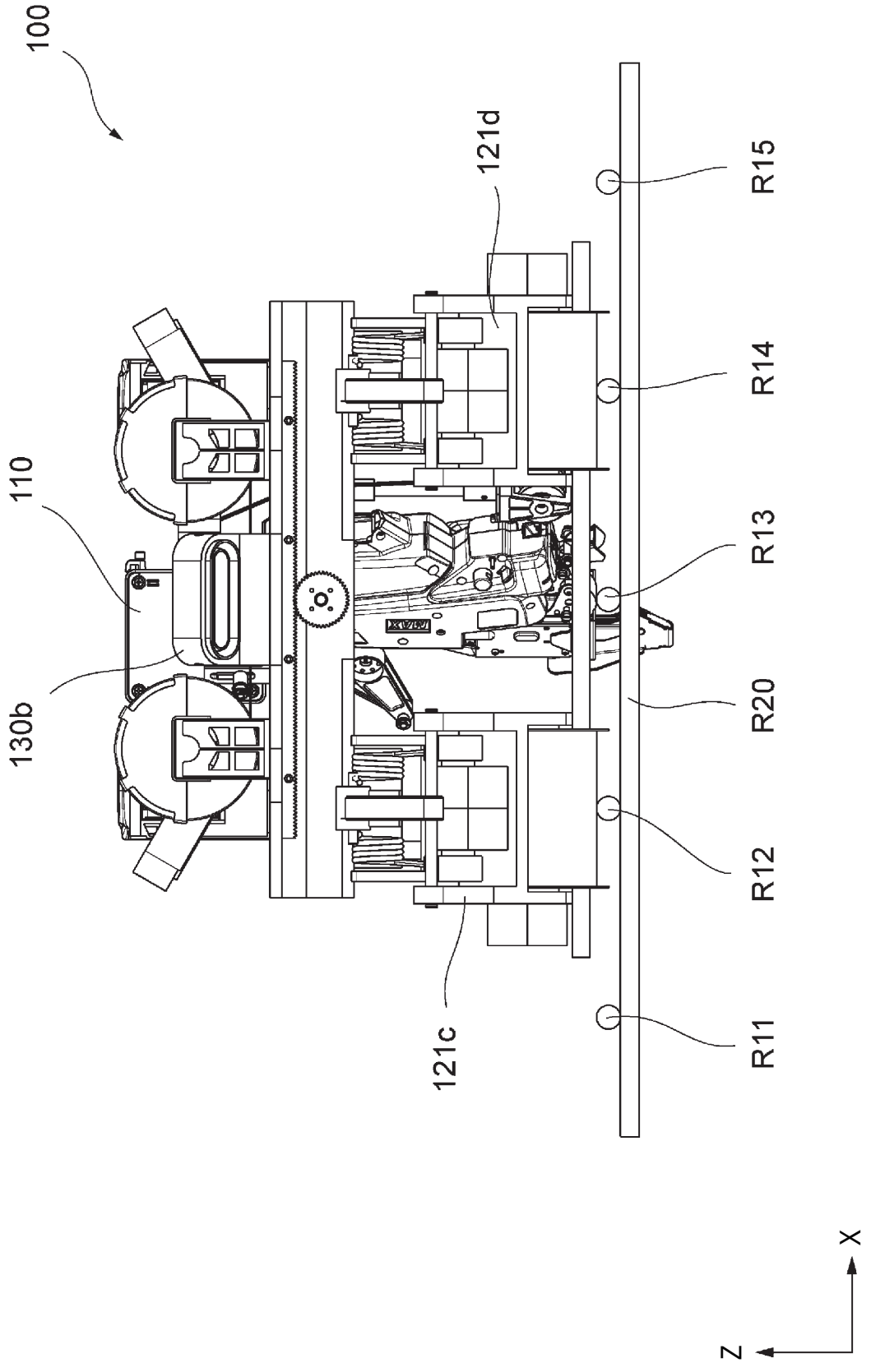

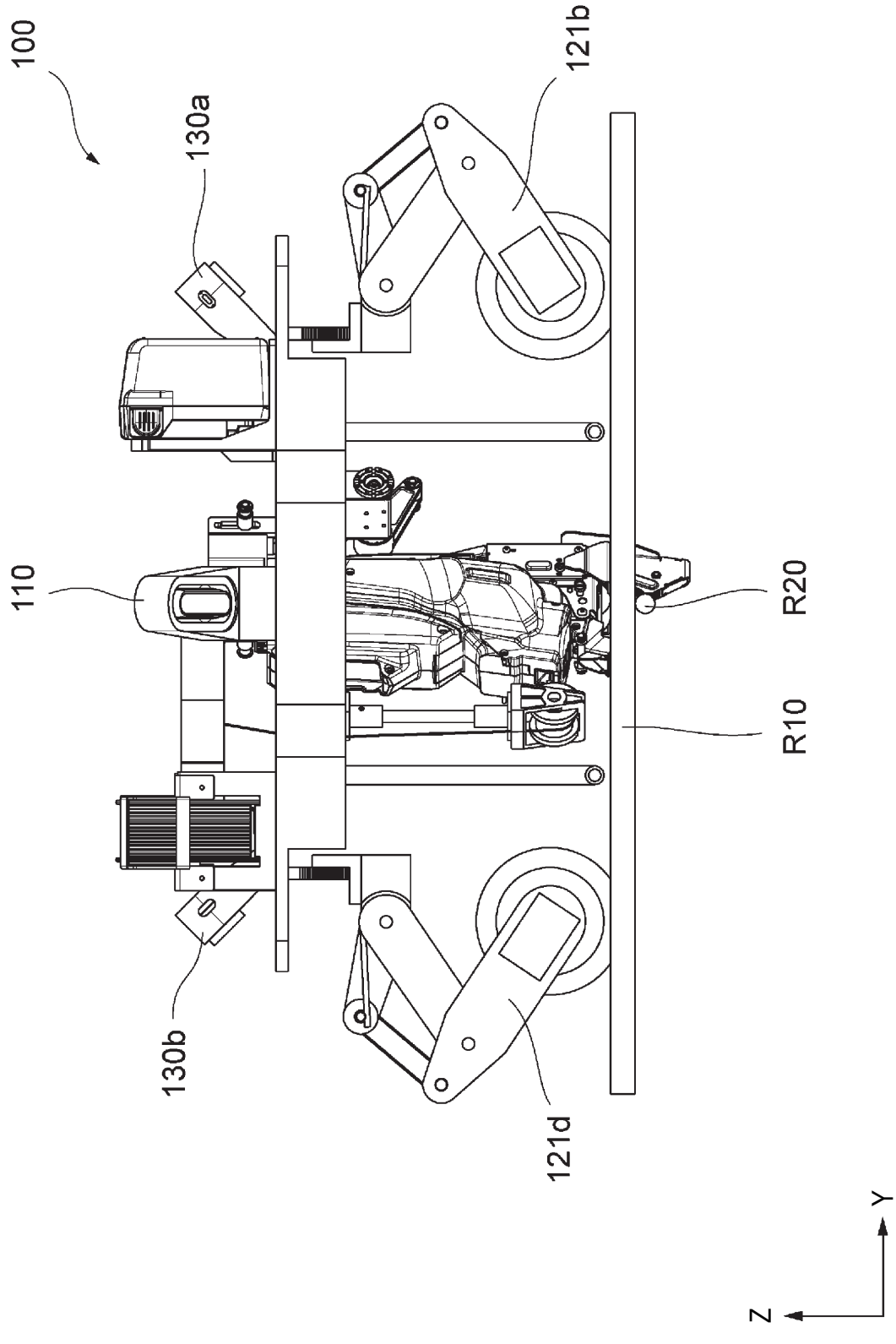

FIG. 11

FIG. 12

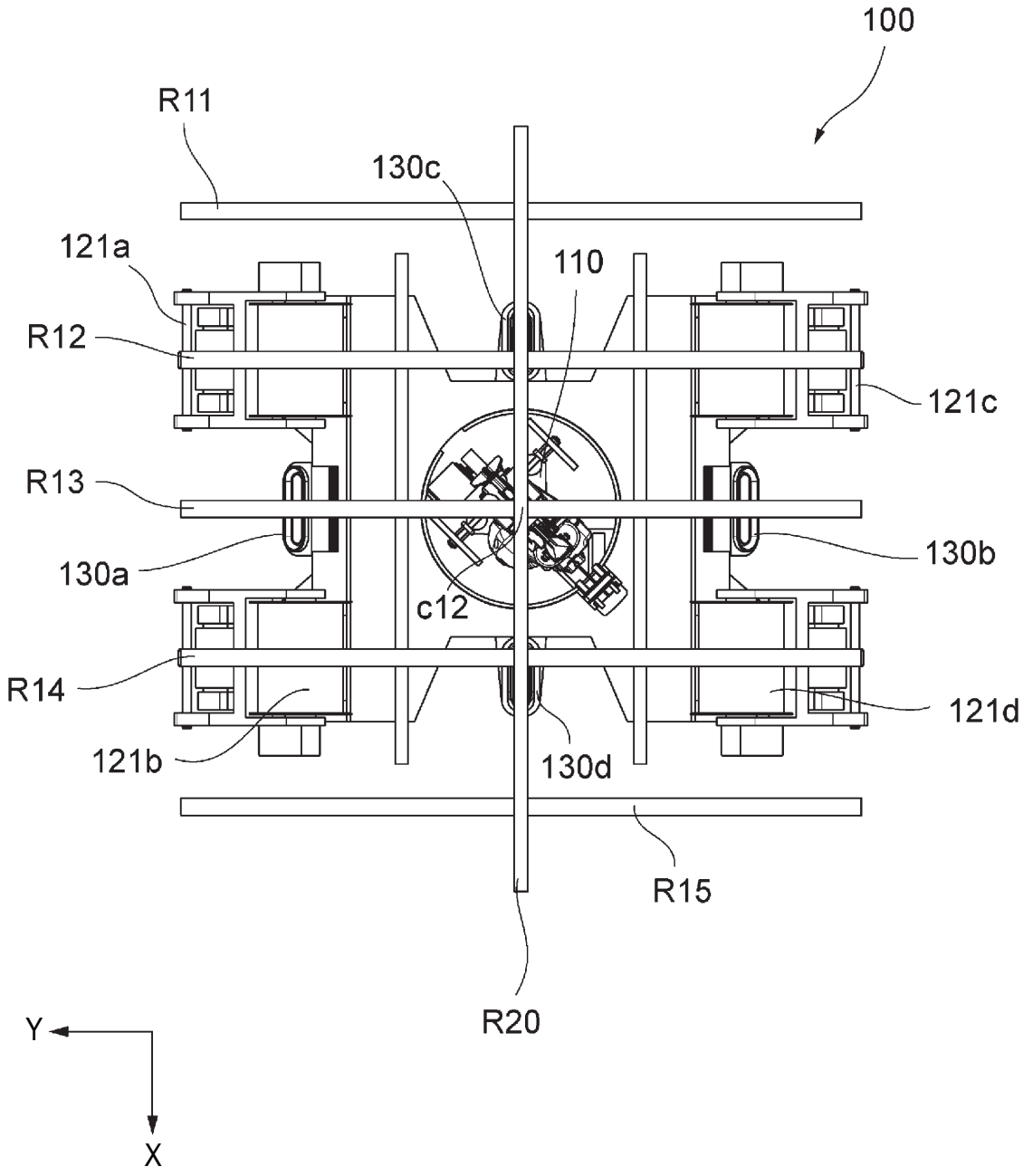
100
R11
130c
121a
110
R12
121c
R13
130b
130a
c12
R14
121d
121b
130d
R15
R20
Y
X

FIG. 13A

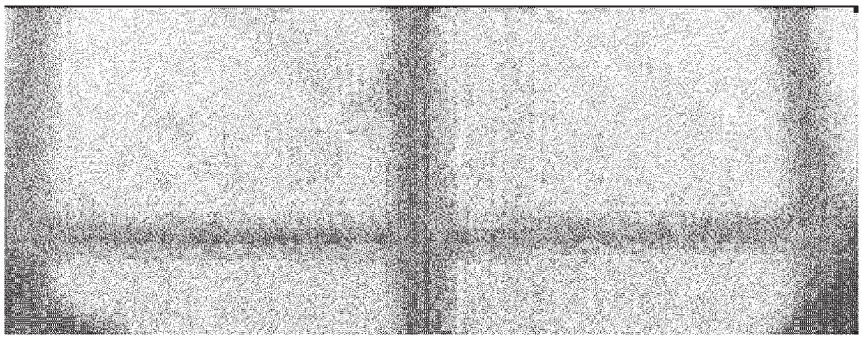

FIG. 13B

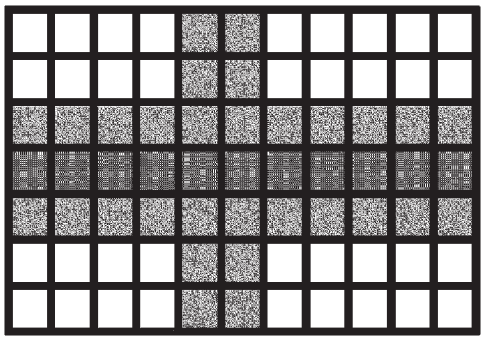

FIG. 14A

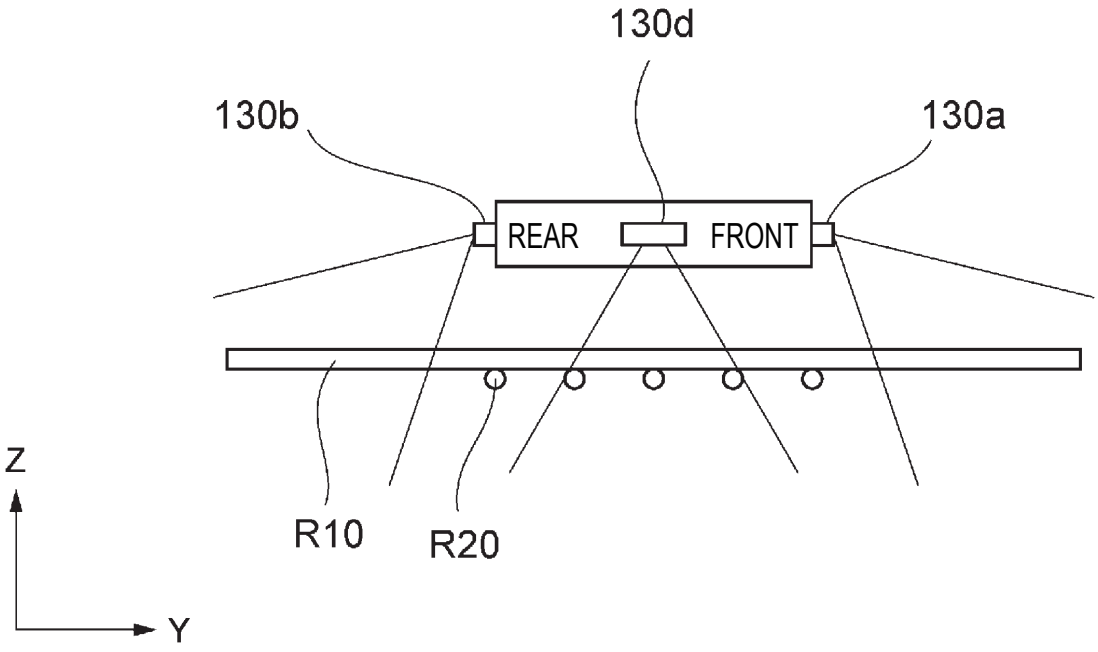

FIG. 14B

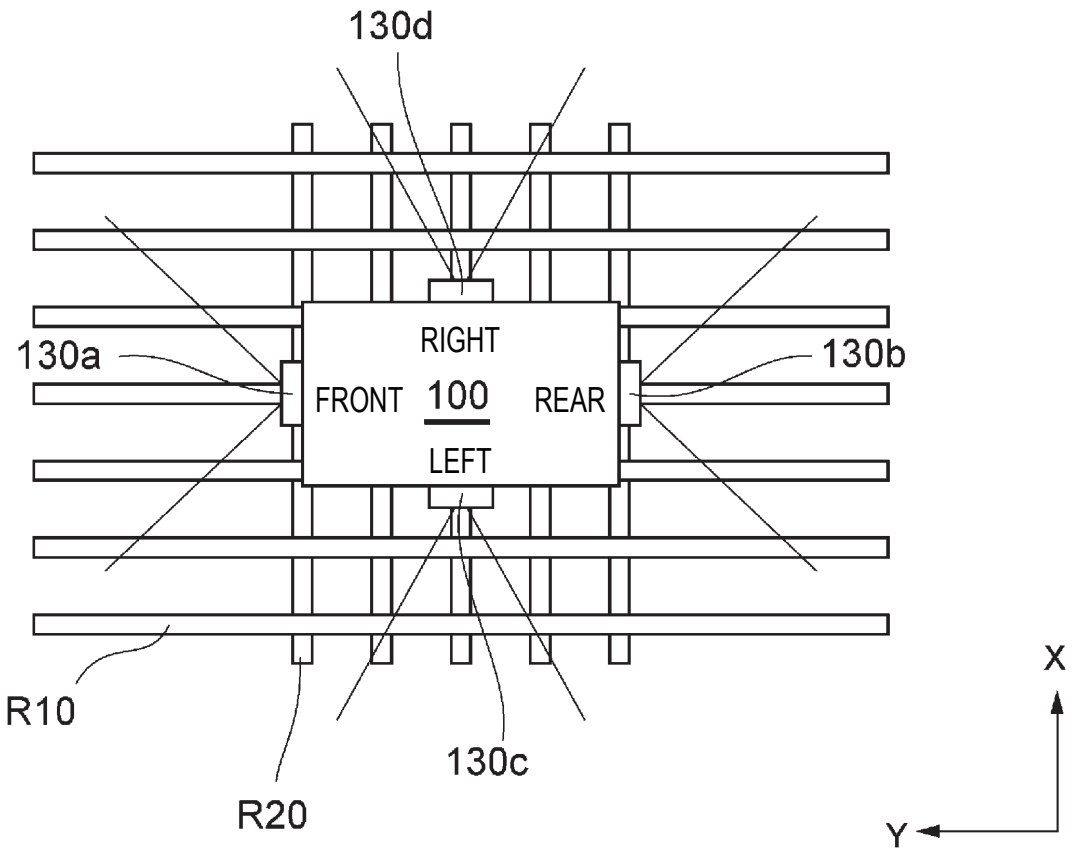

FIG. 15

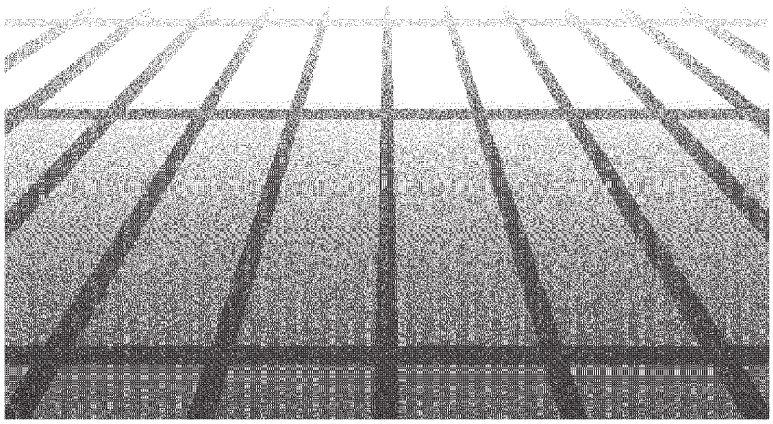

FIG. 16

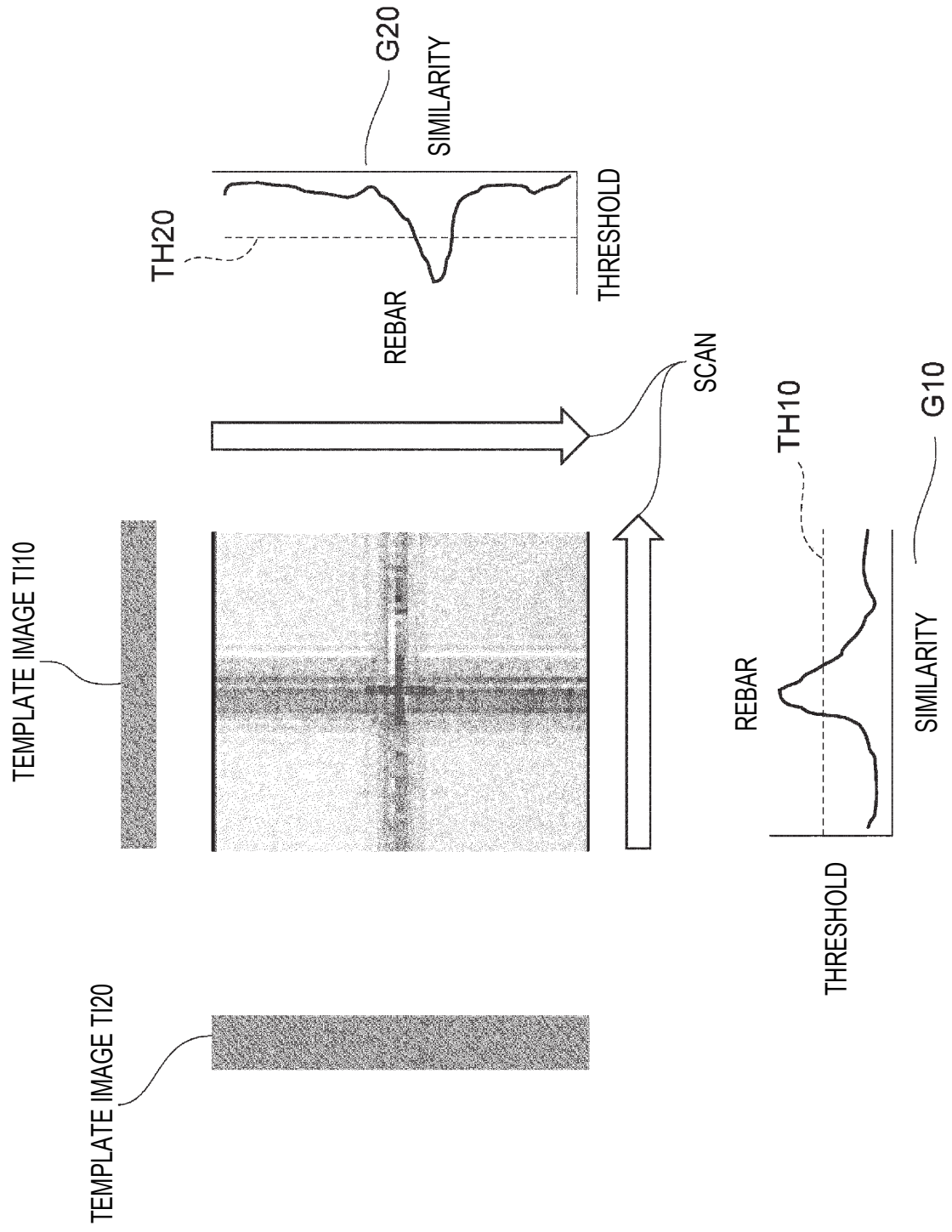
TEMPLATE IMAGE TI10
TEMPLATE IMAGE TI20
SCAN
TH10
G10
REBAR
SIMILARITY
THRESHOLD
TH20
G20
REBAR
SIMILARITY
THRESHOLD

FIG. 17

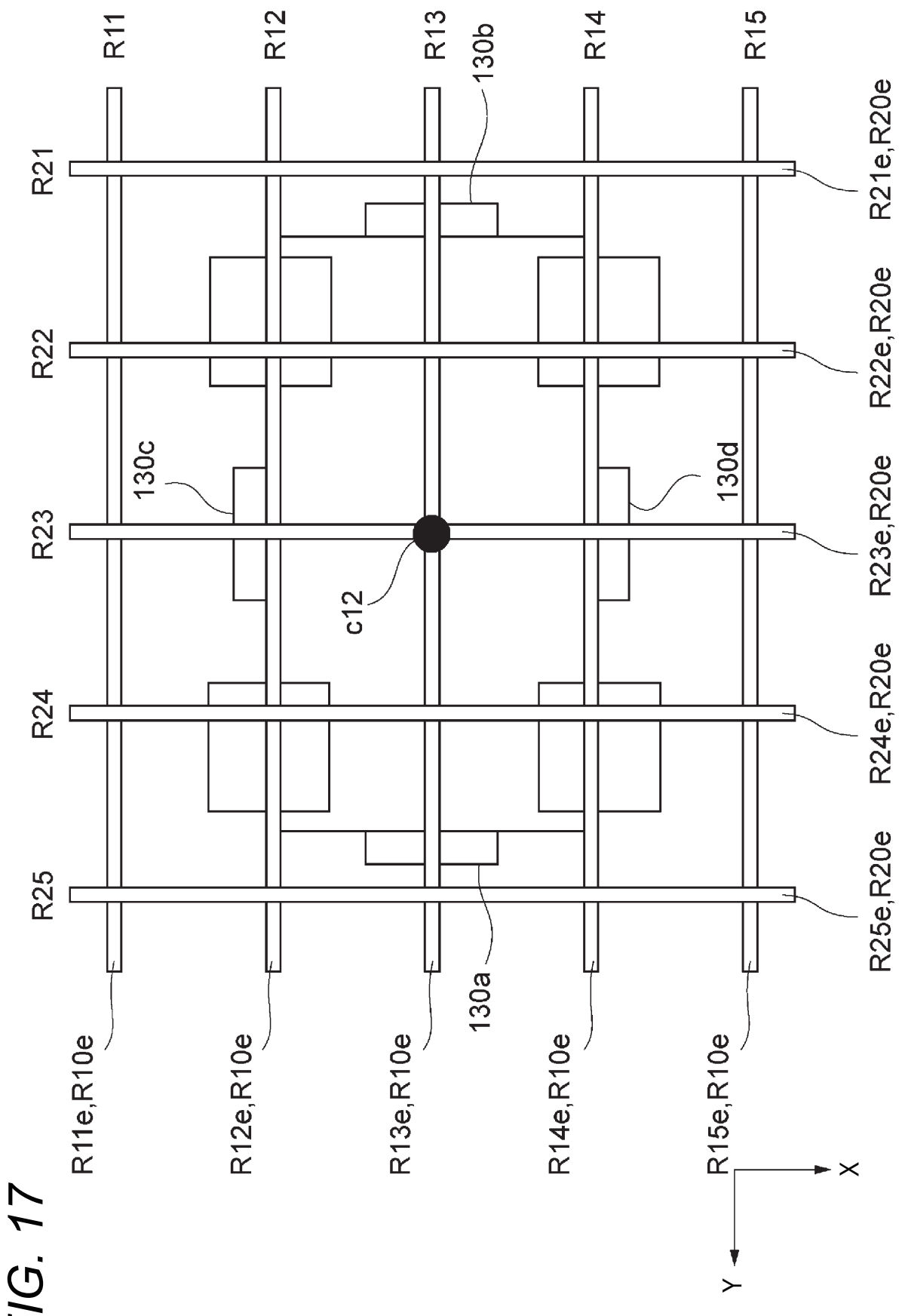
R11
R12
R13
R14
R15
R21
R22
R23
R24
R25
130b
130c
130d
c12
130a
R11e,R10e
R12e,R10e
R13e,R10e
R14e,R10e
R15e,R10e
R21e,R20e
R22e,R20e
R23e,R20e
R24e,R20e
R25e,R20e
X
Y

FIG. 18

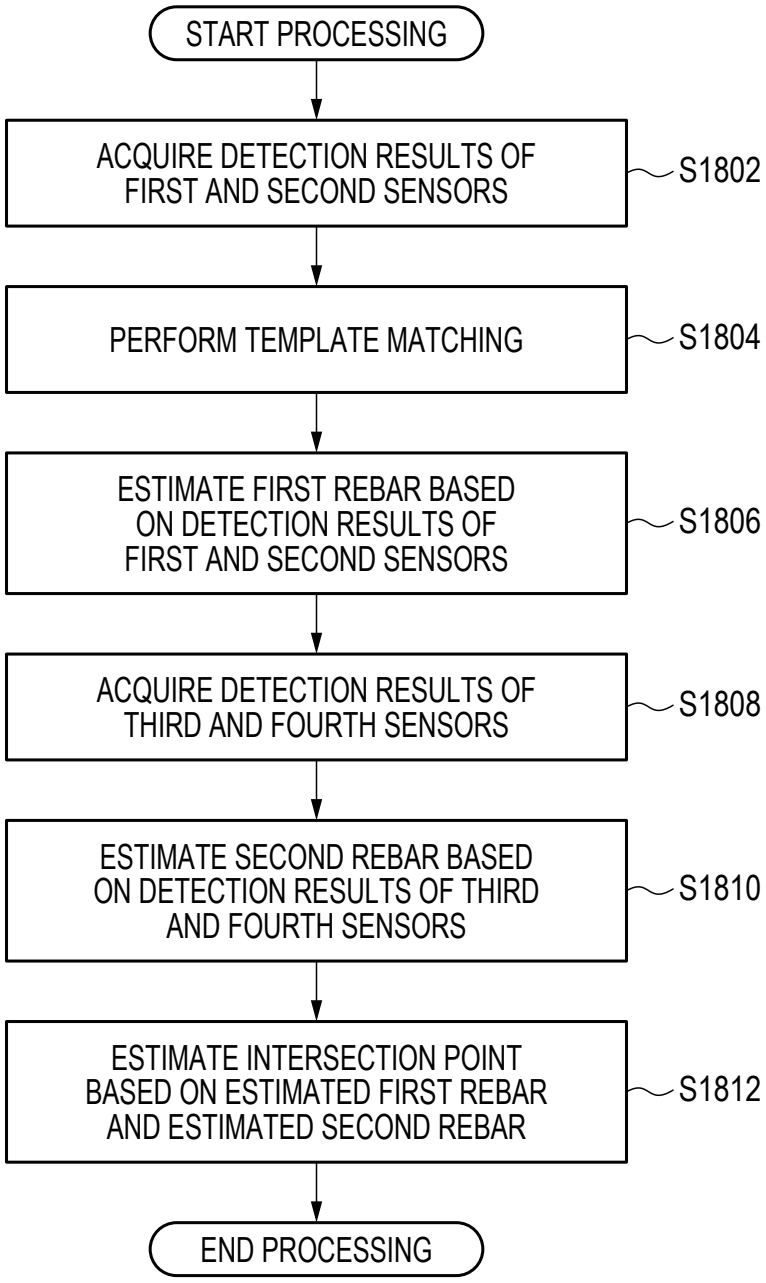
START PROCESSING
ACQUIRE DETECTION RESULTS OF FIRST AND SECOND SENSORS
S1802
PERFORM TEMPLATE MATCHING
S1804
ESTIMATE FIRST REBAR BASED ON DETECTION RESULTS OF FIRST AND SECOND SENSORS
S1806
ACQUIRE DETECTION RESULTS OF THIRD AND FOURTH SENSORS
S1808
ESTIMATE SECOND REBAR BASED ON DETECTION RESULTS OF THIRD AND FOURTH SENSORS
S1810
ESTIMATE INTERSECTION POINT BASED ON ESTIMATED FIRST REBAR AND ESTIMATED SECOND REBAR
S1812
END PROCESSING

FIG. 19

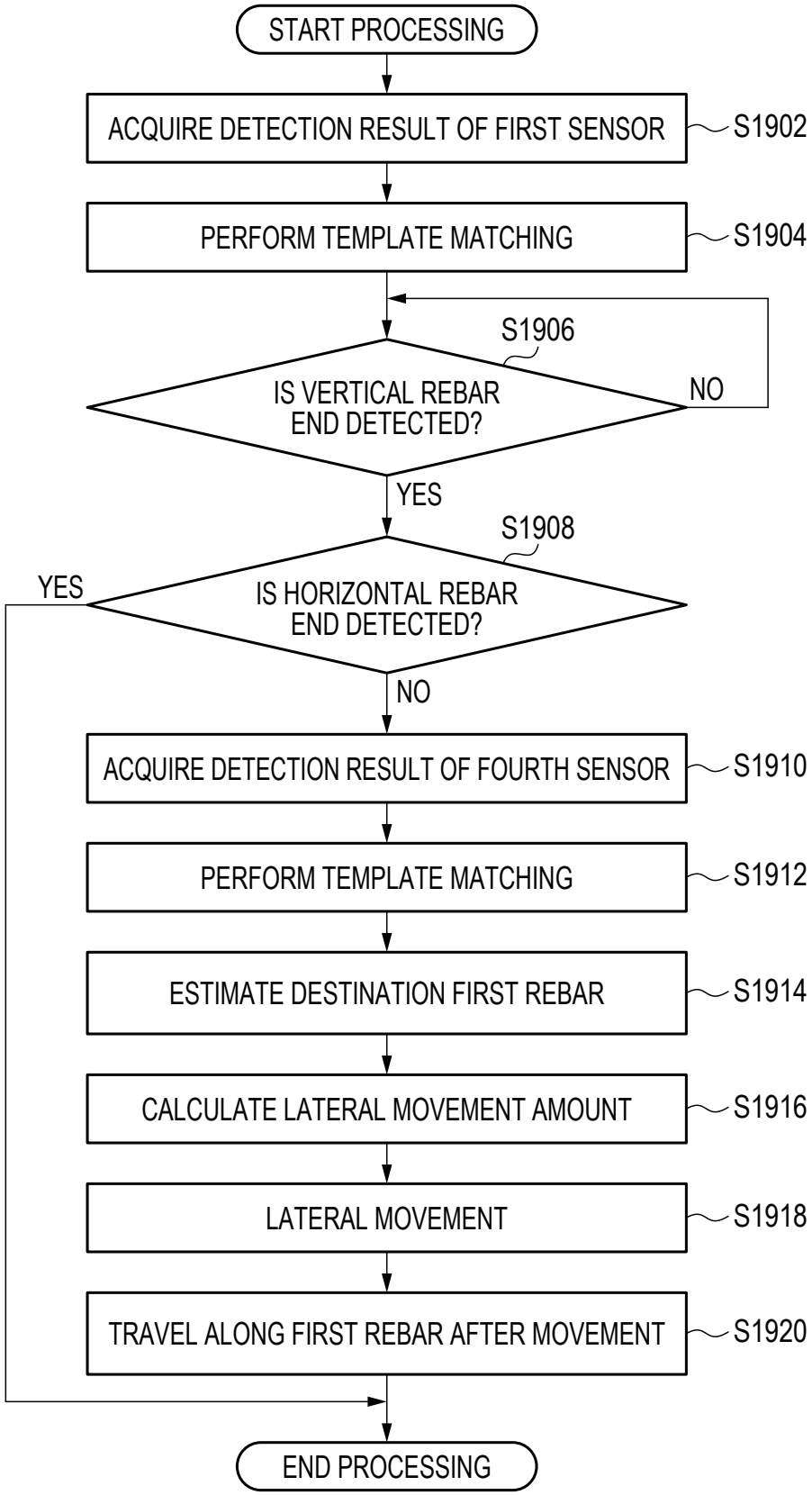
START PROCESSING
ACQUIRE DETECTION RESULT OF FIRST SENSOR
S1902
PERFORM TEMPLATE MATCHING
S1904
S1906
IS VERTICAL REBAR END DETECTED?
NO
YES
S1908
IS HORIZONTAL REBAR END DETECTED?
YES
NO
ACQUIRE DETECTION RESULT OF FOURTH SENSOR
S1910
PERFORM TEMPLATE MATCHING
S1912
ESTIMATE DESTINATION FIRST REBAR
S1914
CALCULATE LATERAL MOVEMENT AMOUNT
S1916
LATERAL MOVEMENT
S1918
TRAVEL ALONG FIRST REBAR AFTER MOVEMENT
S1920
END PROCESSING

FIG. 20A

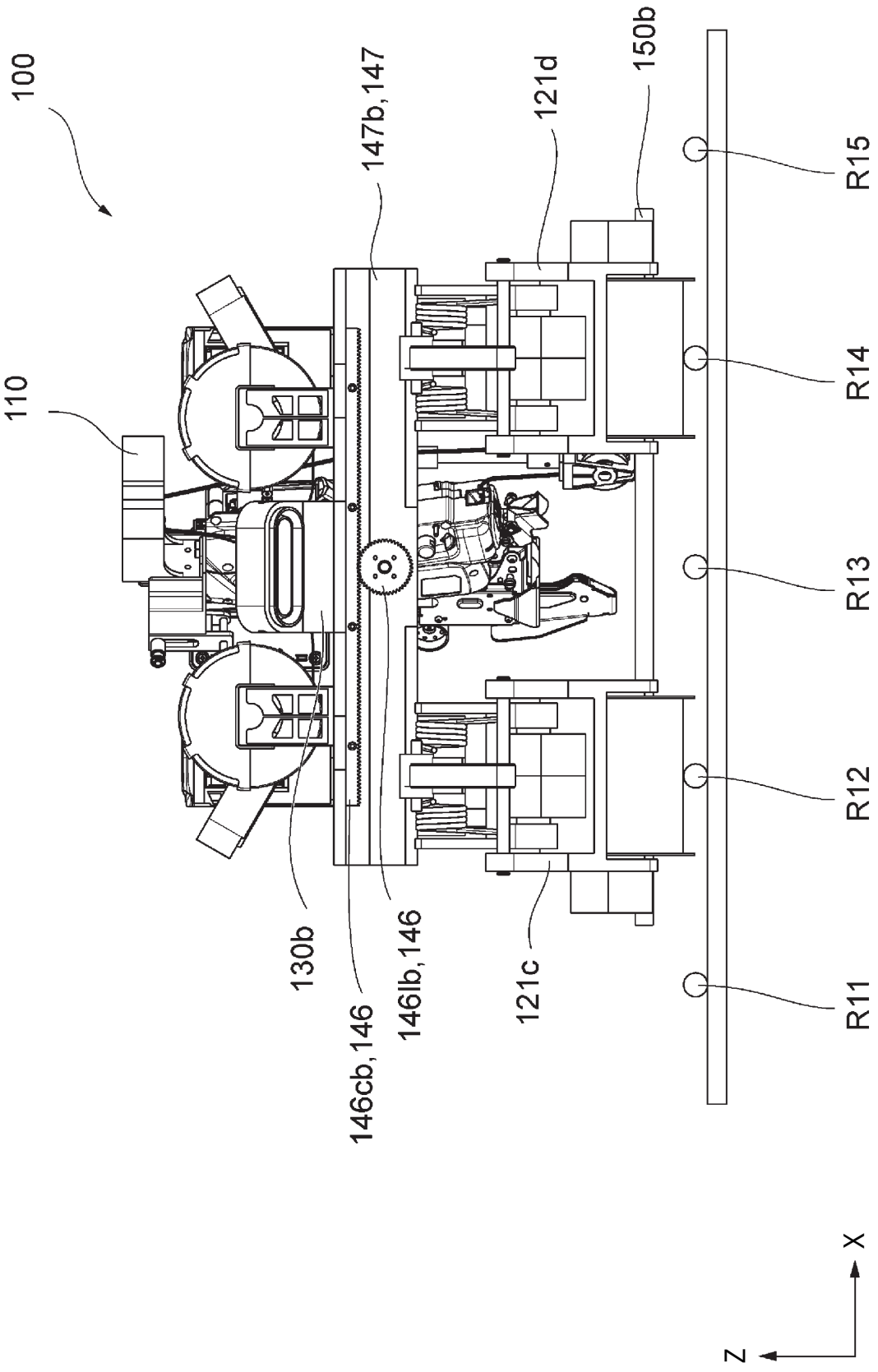
100
110
147b,147
121d
150b
R15
R14
R13
R12
R11
130b
146cb,146
146lb,146
121c
Z
X

FIG. 20B

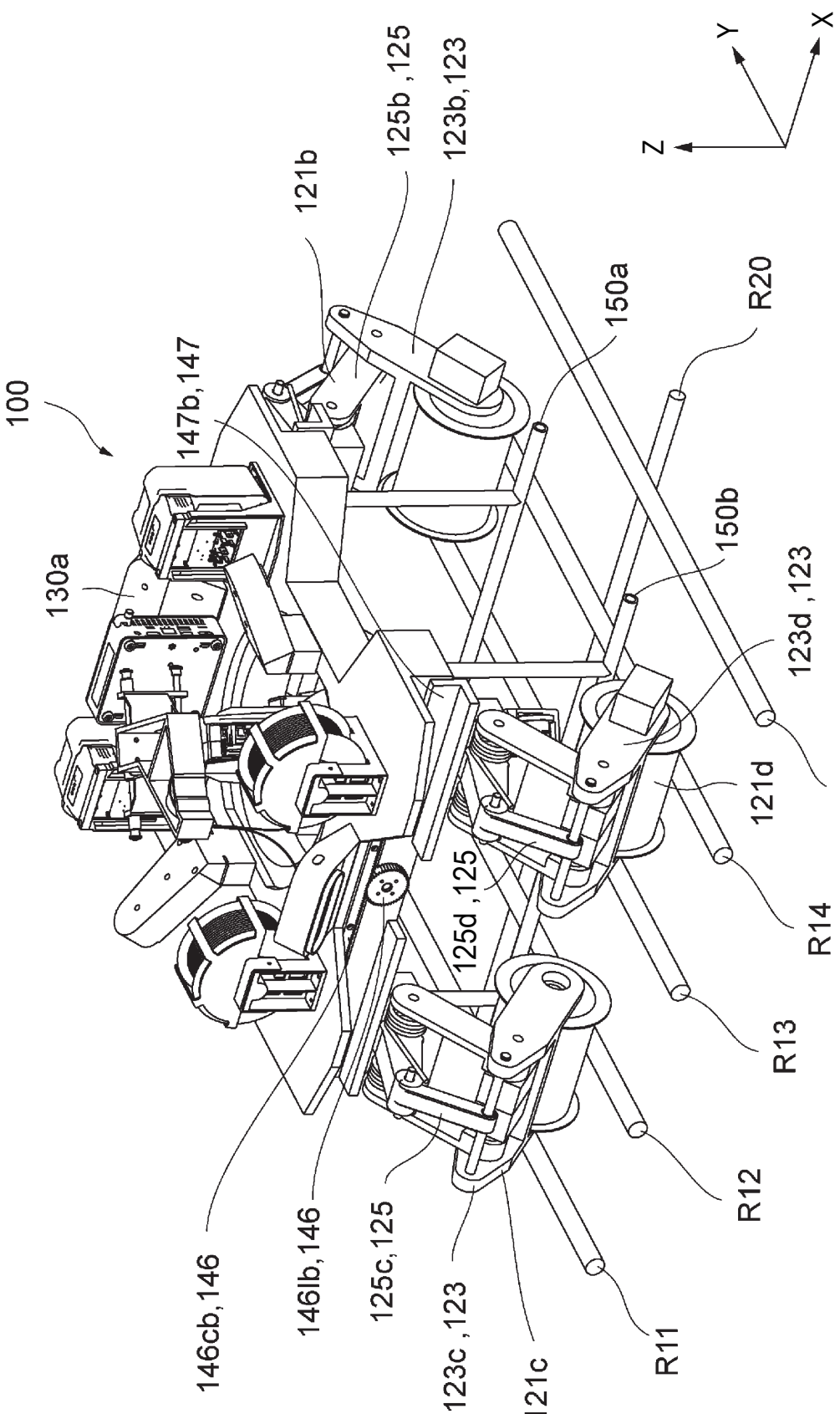
100
130a
147b,147
121b
125b ,125
123b,123
150a
R20
150b
123d ,123
121d
R15
R14
R13
R12
R11
121c
123c ,123
125c,125
146lb,146
146cb,146
125d ,125
Z
Y
X

FIG. 21A

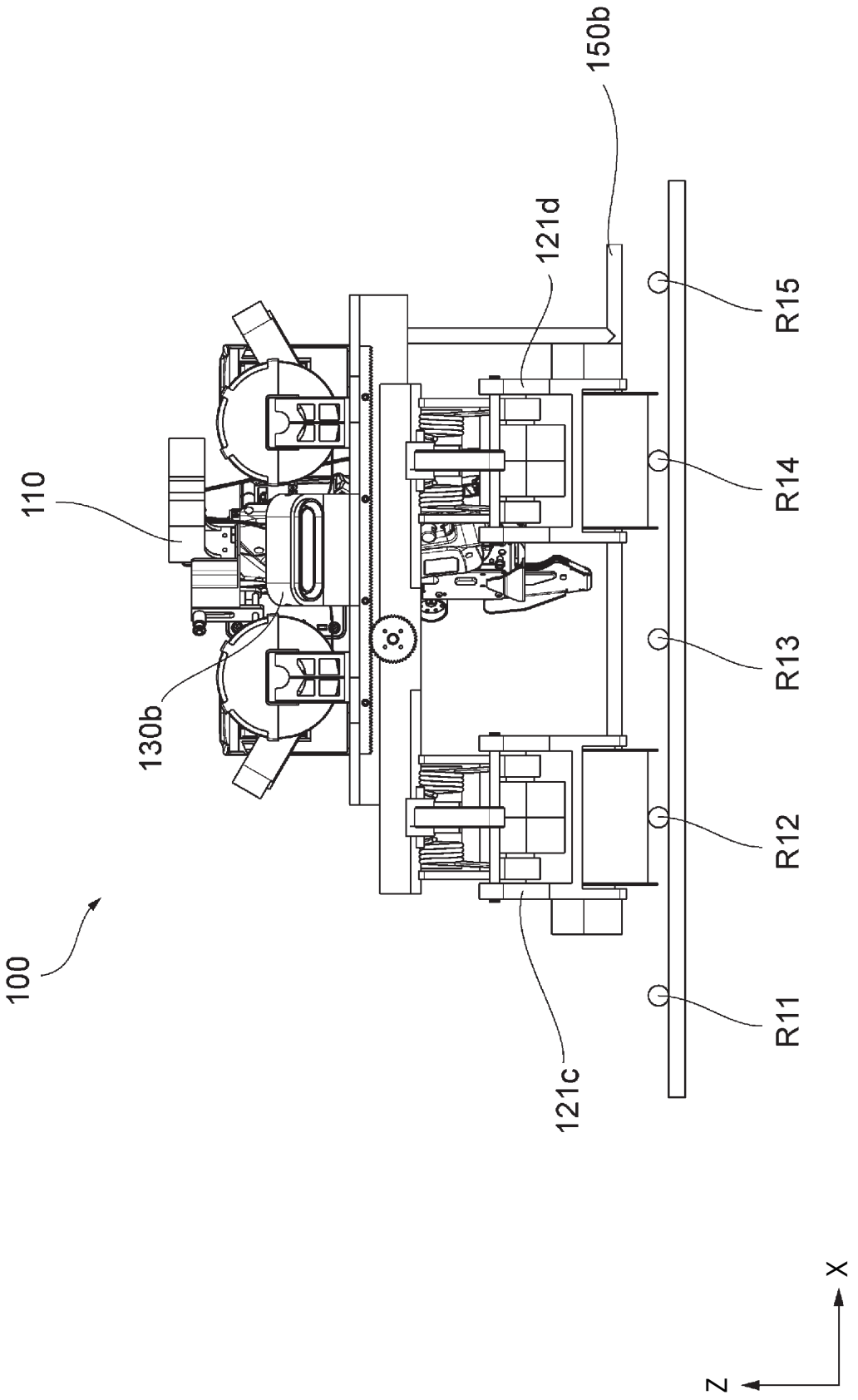

FIG. 21B

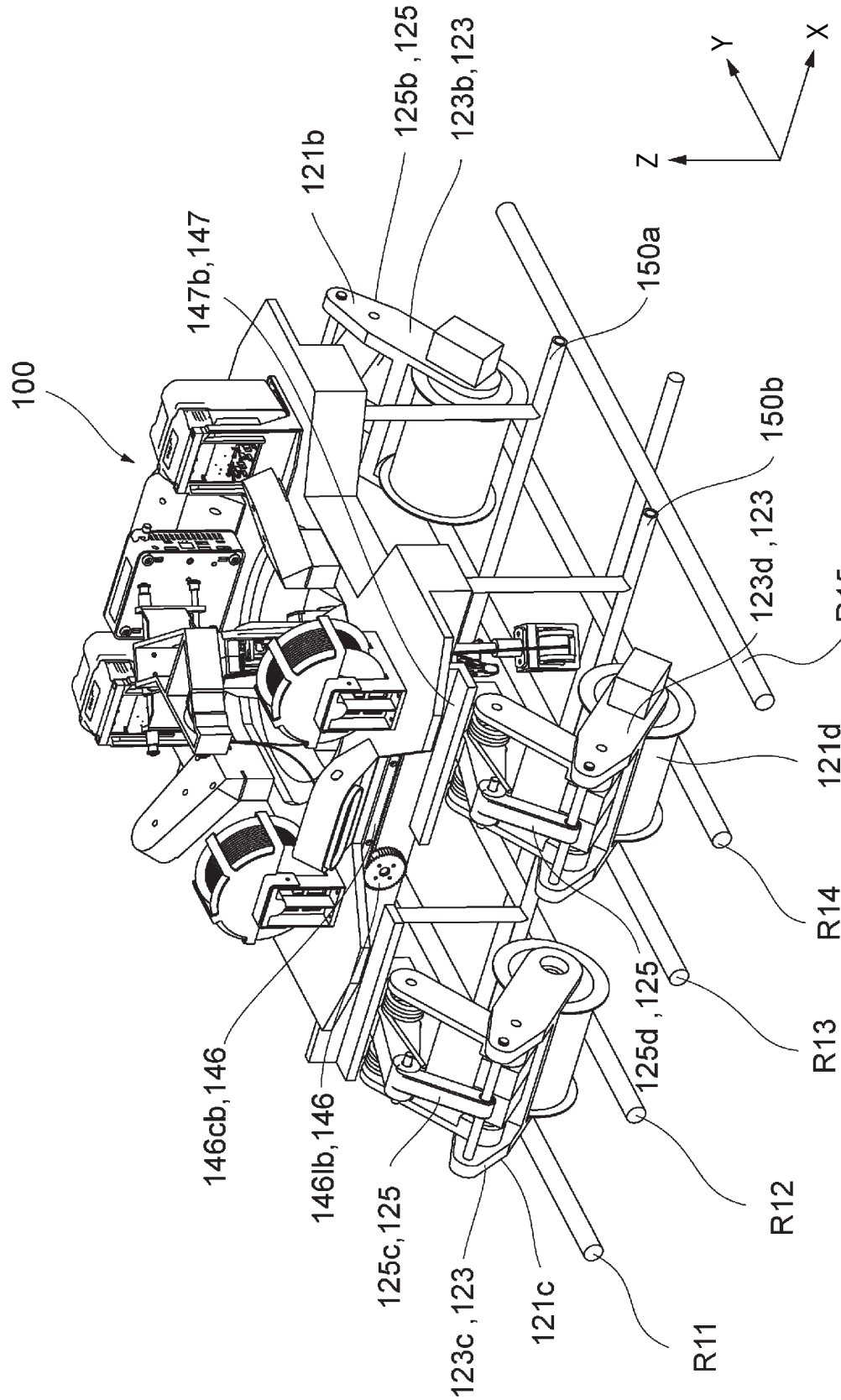
100
147b,147
121b
125b ,125
123b,123
150a
150b
123d ,123
R15
121d
R14
R13
125d ,125
R12
R11
121c
123c ,123
125c,125
146lb,146
146cb,146
Z
Y
X

FIG. 22A

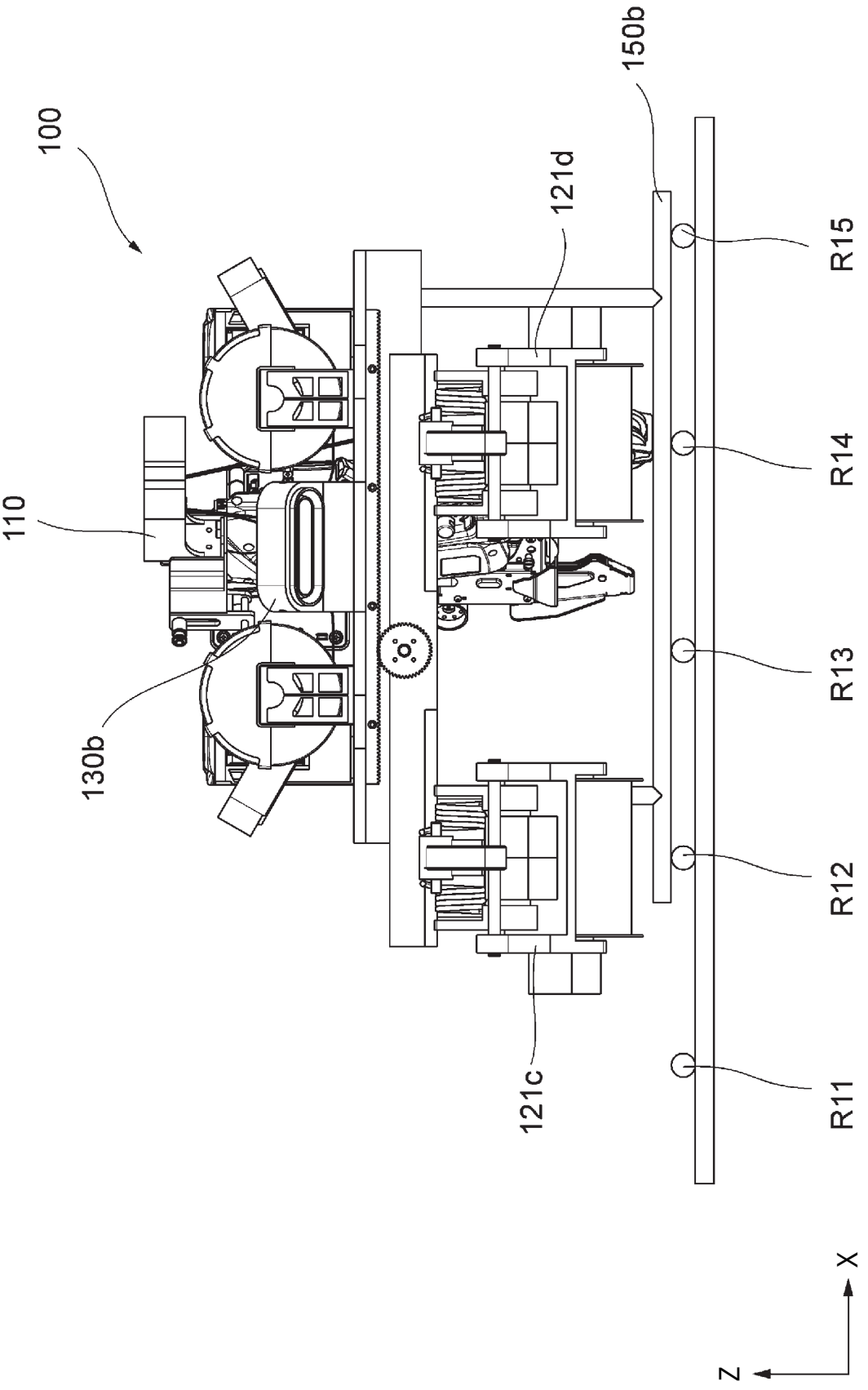

FIG. 22B

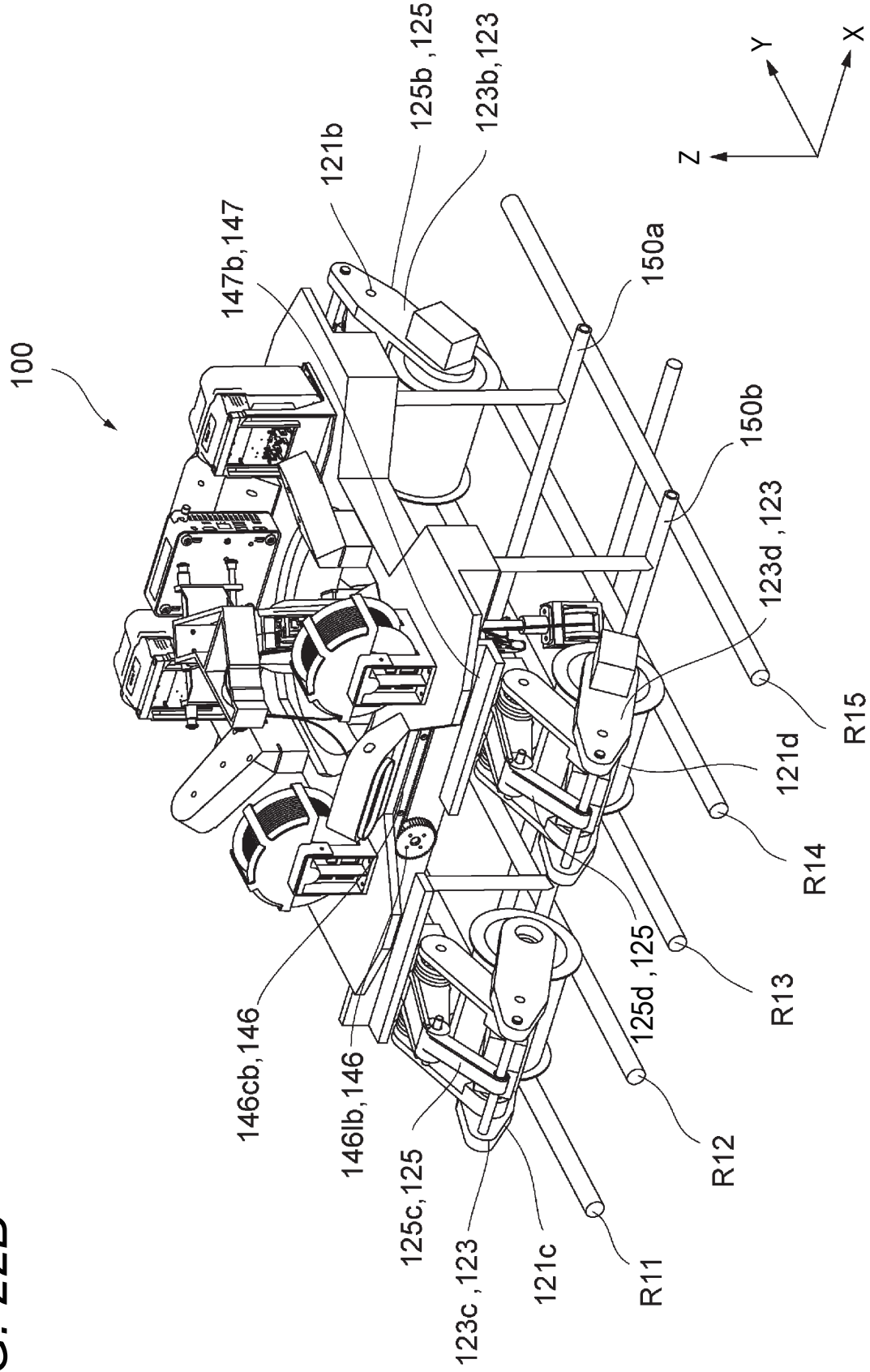
100
147b,147
121b
125b ,125
123b,123
150a
150b
123d ,123
121d
R15
R14
R13
125d ,125
R12
R11
121c
123c ,123
125c,125
146lb,146
146cb,146
Z
Y
X

FIG. 23A

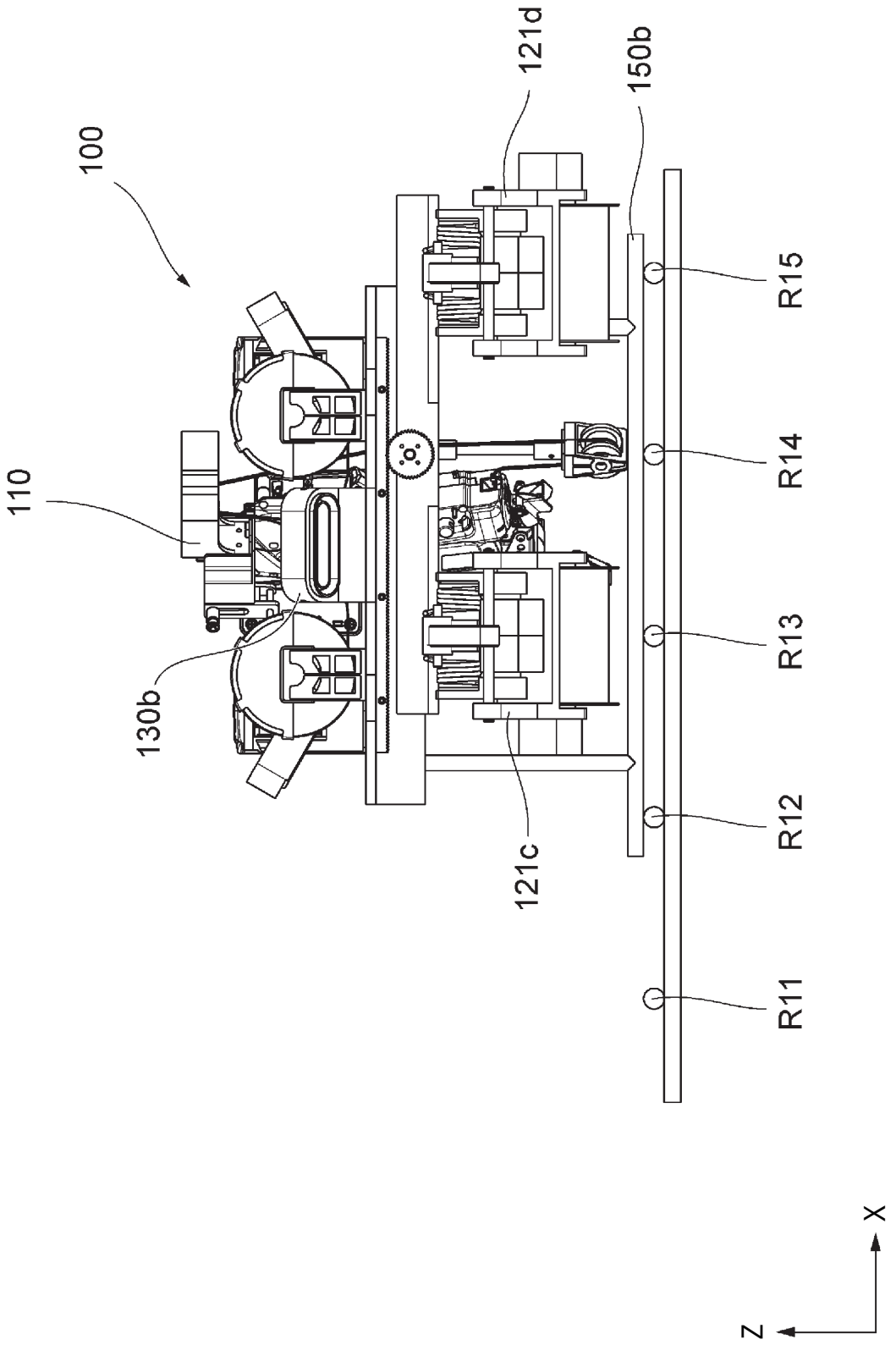

FIG. 23B

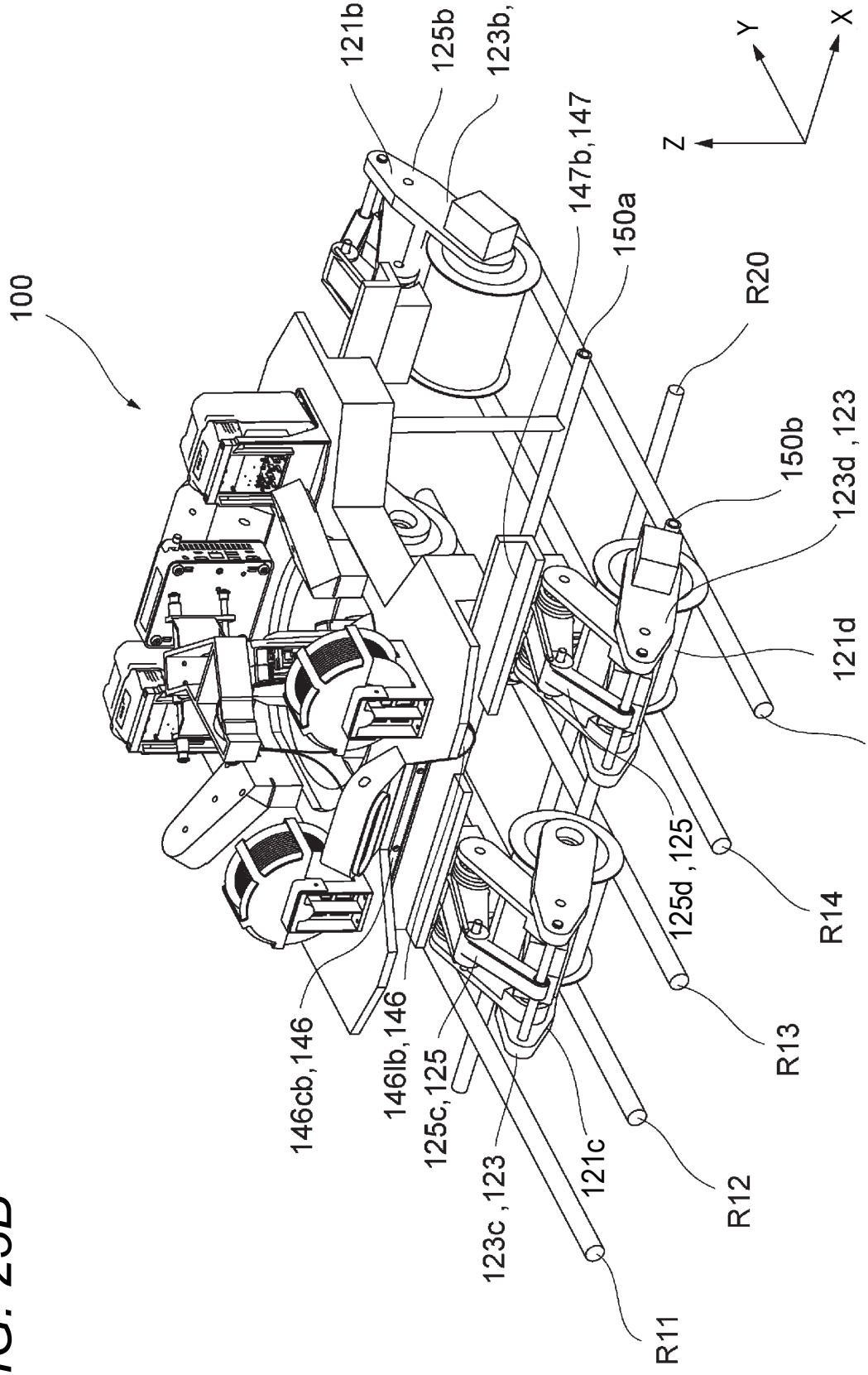
100
121b
125b ,125
123b,123
147b,147
150a
R20
150b
123d ,123
121d
R15
R14
125d ,125
R13
R12
121c
R11
123c ,123
125c,125
146lb,146
146cb,146
Z
Y
X

FIG. 24A

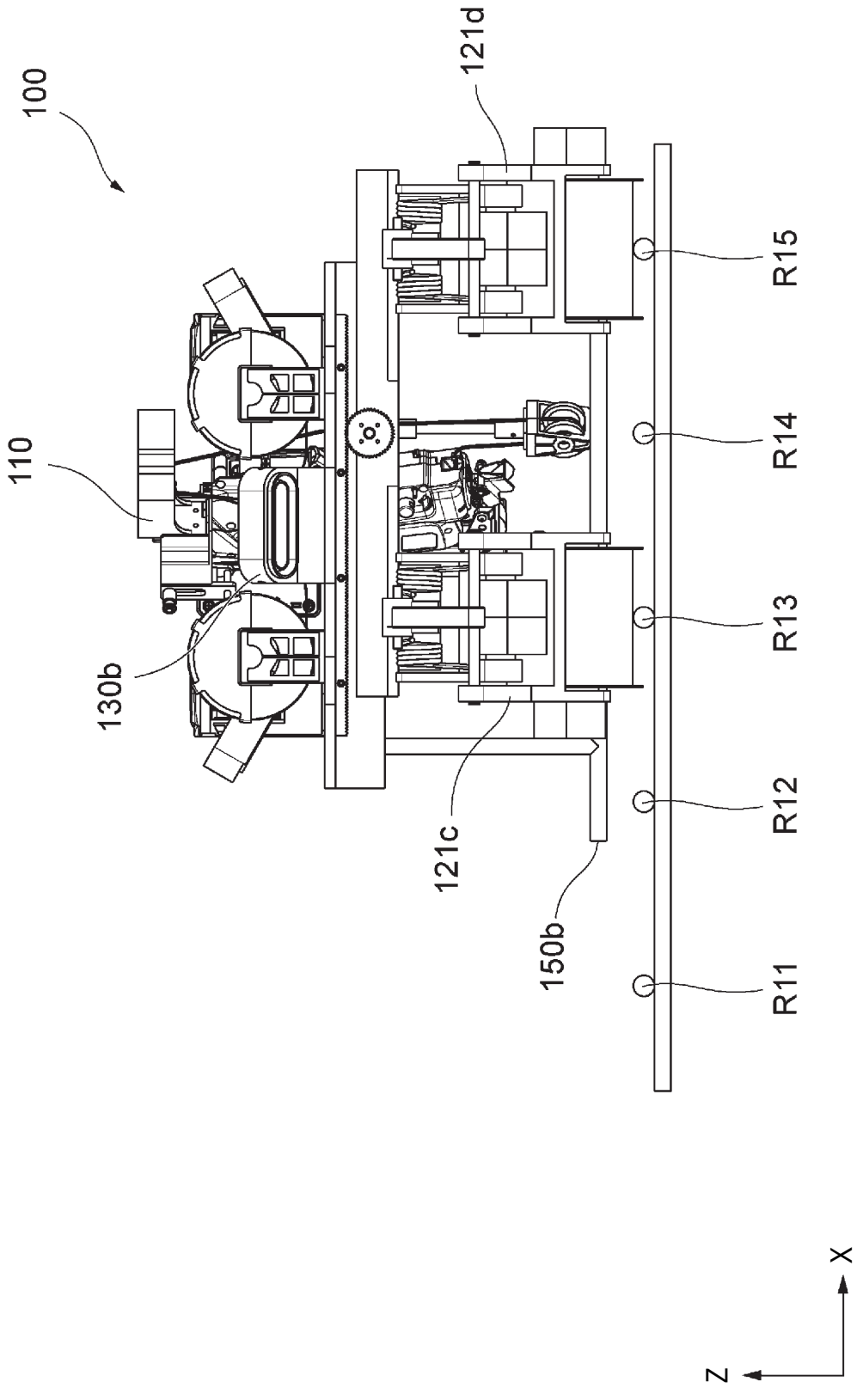

FIG. 24B

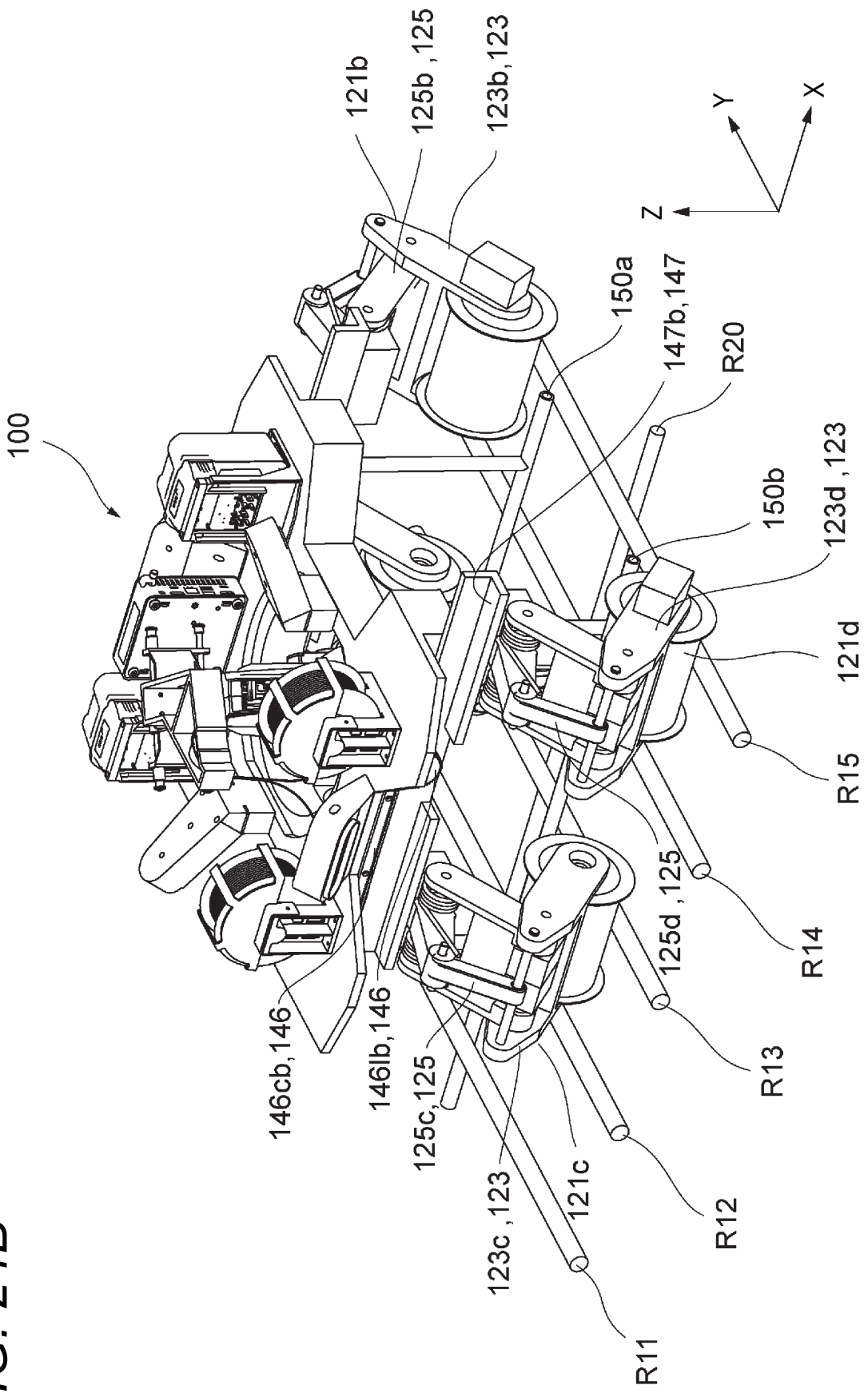
100
121b
125b ,125
123b,123
150a
147b,147
R20
150b
123d ,123
121d
R15
R14
125d ,125
R13
R12
121c
123c ,123
R11
146cb,146
146lb,146
125c,125
Z
Y
X

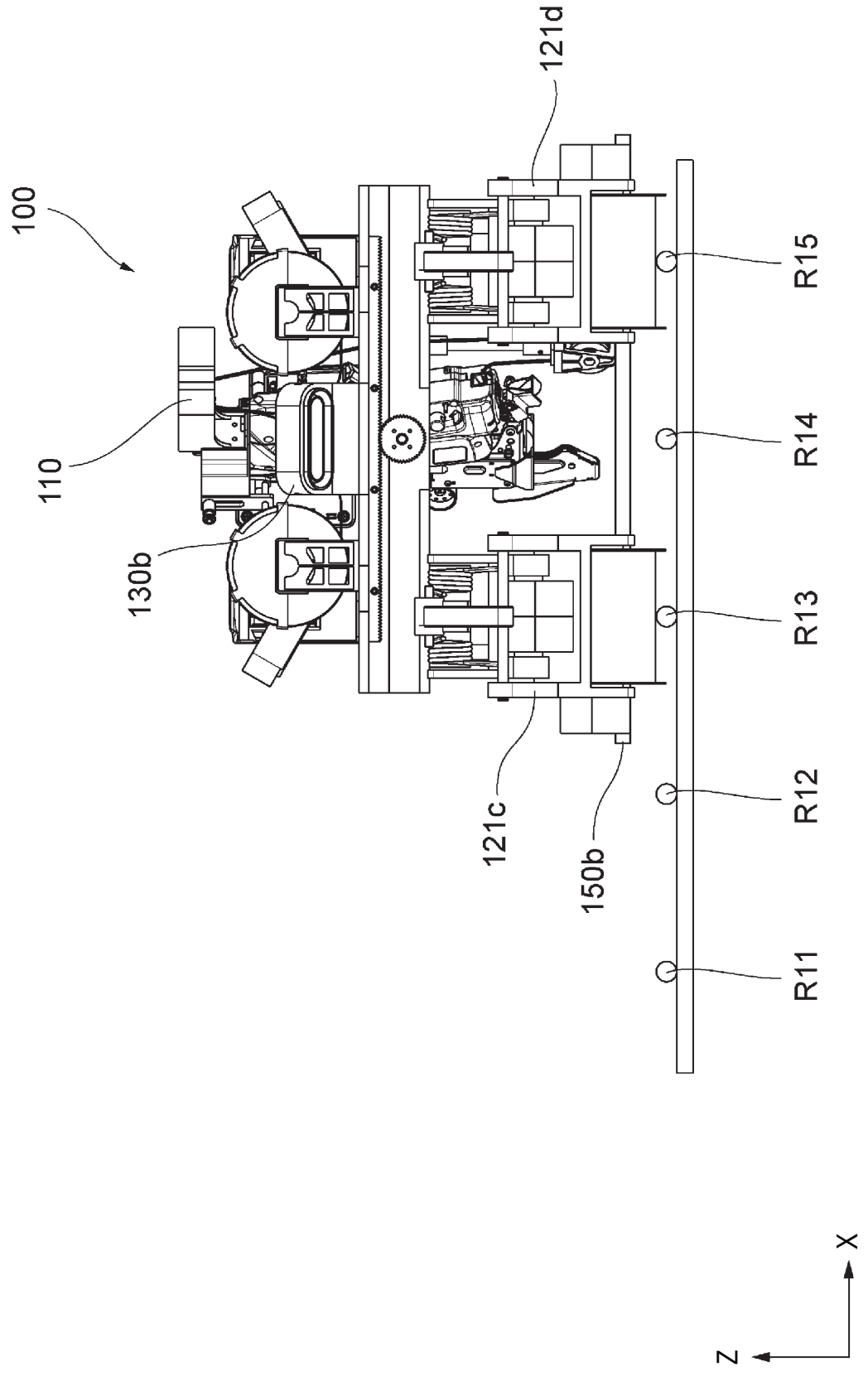

FIG. 25A

FIG. 25B

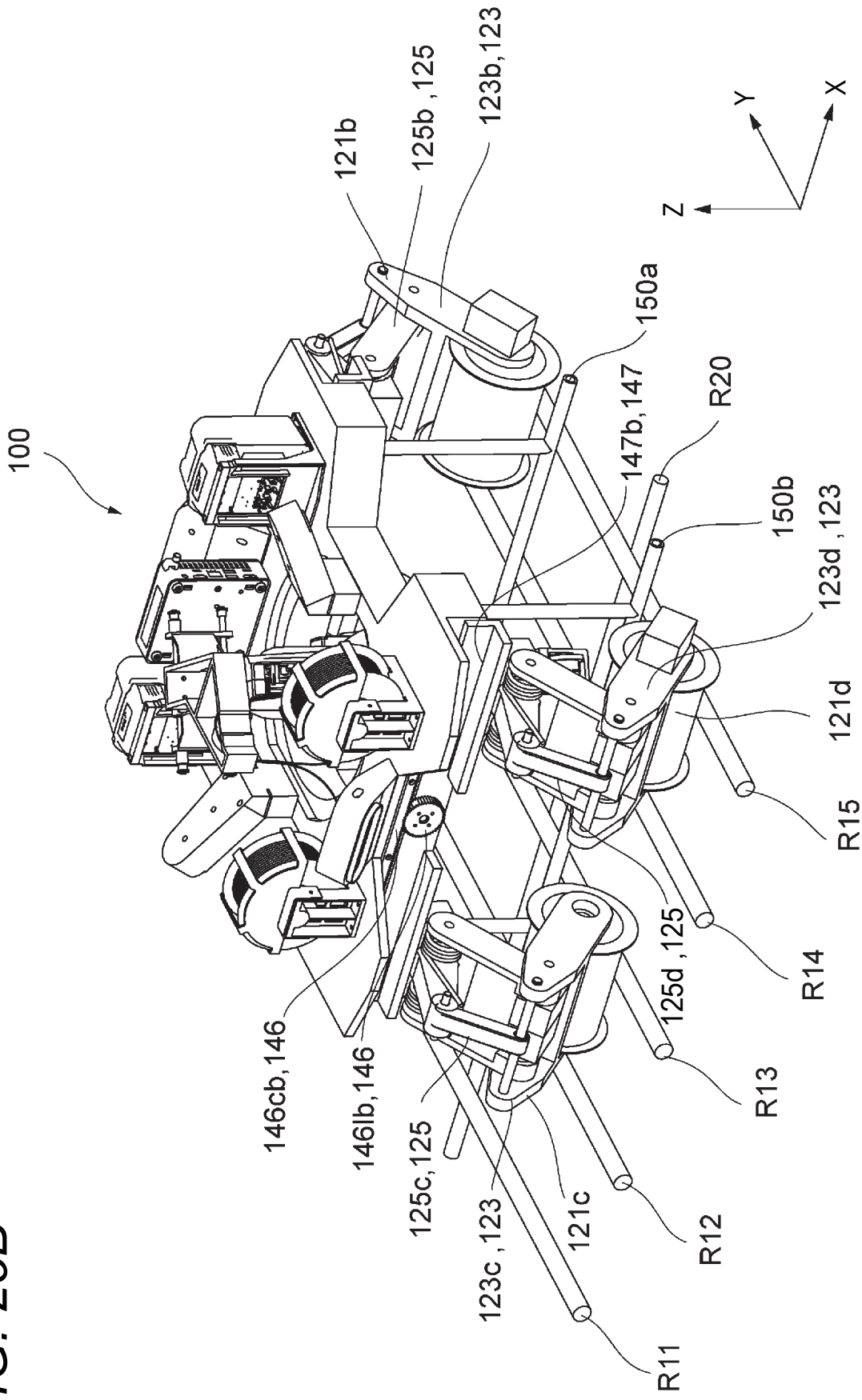
100
121b
125b ,125
123b,123
150a
147b,147
R20
150b
123d ,123
121d
R15
R14
125d ,125
R13
R12
121c
123c ,123
125c,125
146lb,146
146cb,146
R11
Z
Y
X

FIG. 26

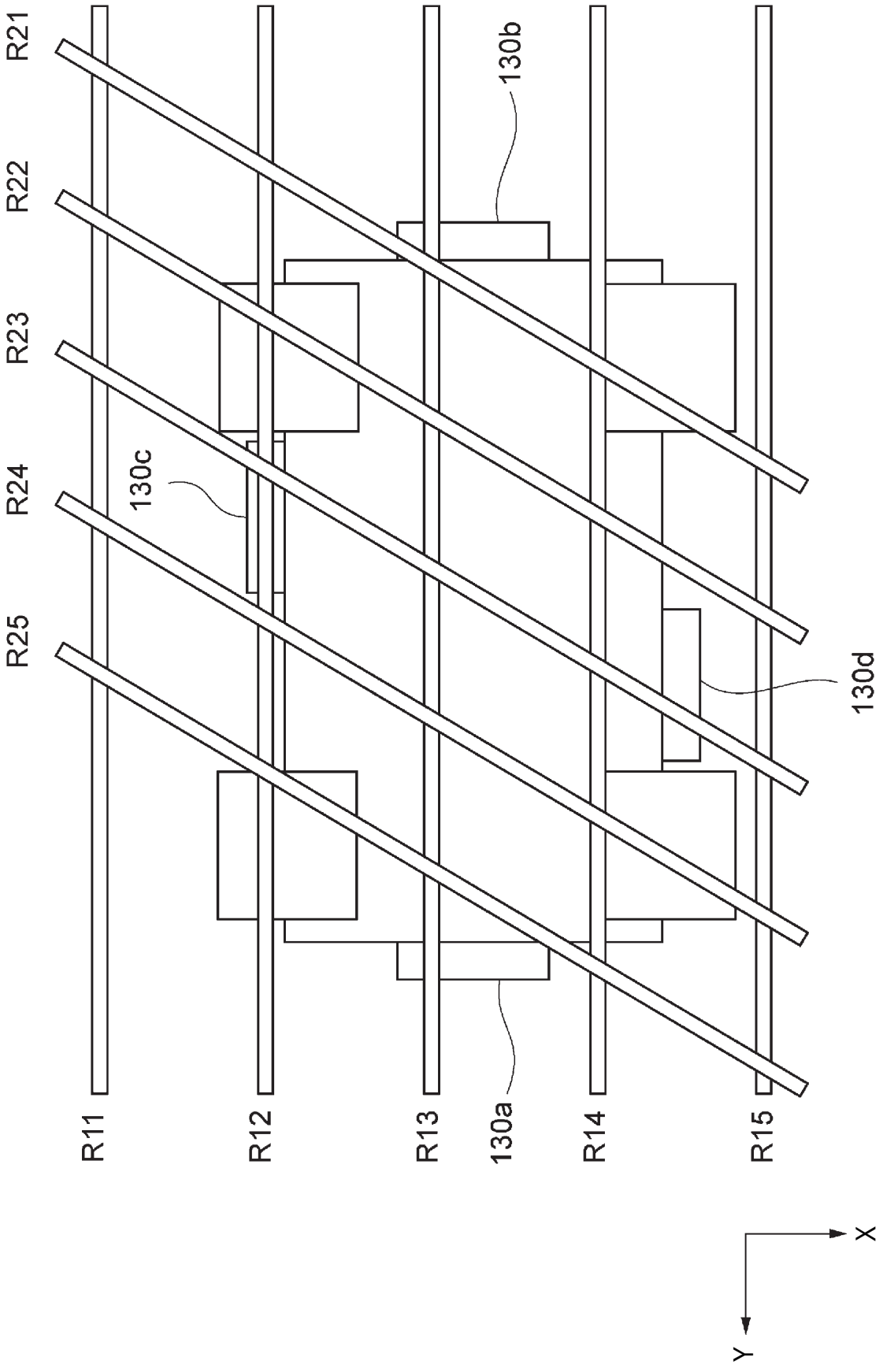

FIG. 27

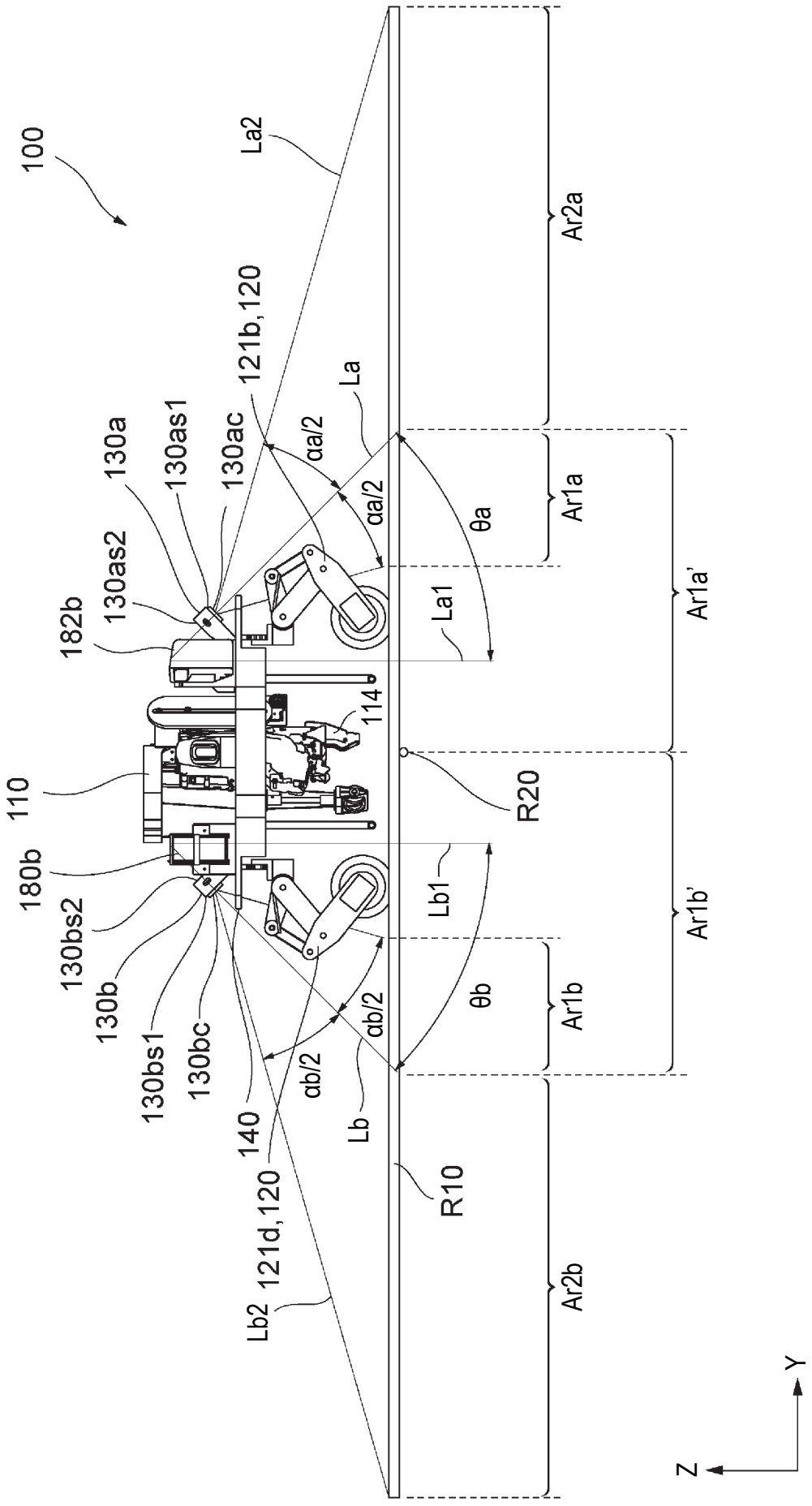
100
La2
Ar2a
121b,120
130a
130as1
130ac
αa/2
La
αa/2
θa
Ar1a
Ar1a'
182b
130as2
La1
114
110
R20
180b
130bs2
Lb1
130b
130bs1
130bc
140
αb/2
αb/2
Lb
θb
Ar1b
Ar1b'
R10
Lb2
121d,120
Ar2b
Y
Z

FIG. 28

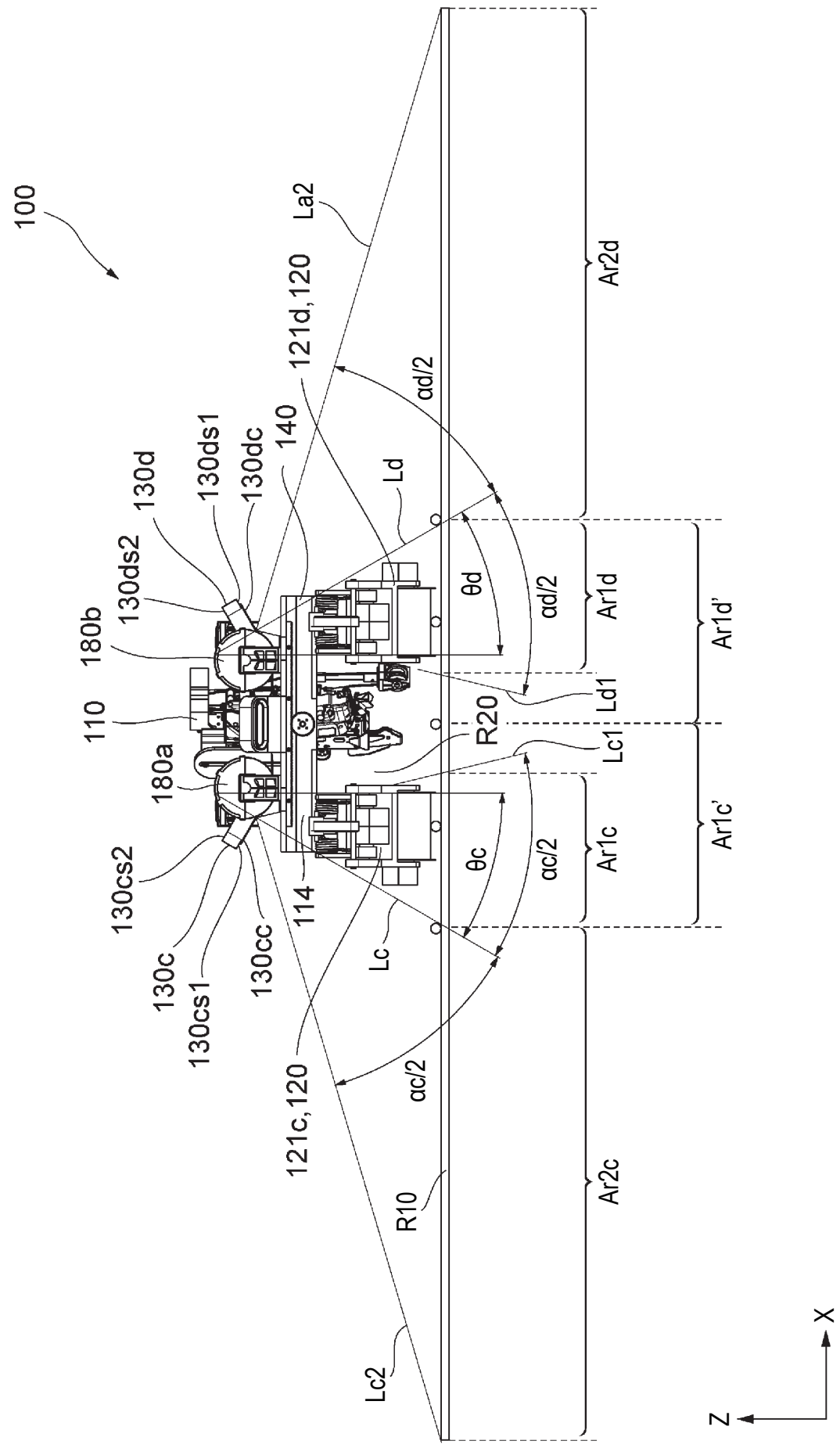
100
La2
121d,120
Ar2d
αd/2
Ld
130d
130ds1
130dc
140
130ds2
180b
110
180a
130cs2
130c
130cs1
130cc
114
θd
αd/2
Ar1d
Ar1d'
Ld1
R20
Lc1
θc
αc/2
Ar1c
Ar1c'
Lc
121c,120
αc/2
R10
Ar2c
Lc2
Z
X

FIG. 29

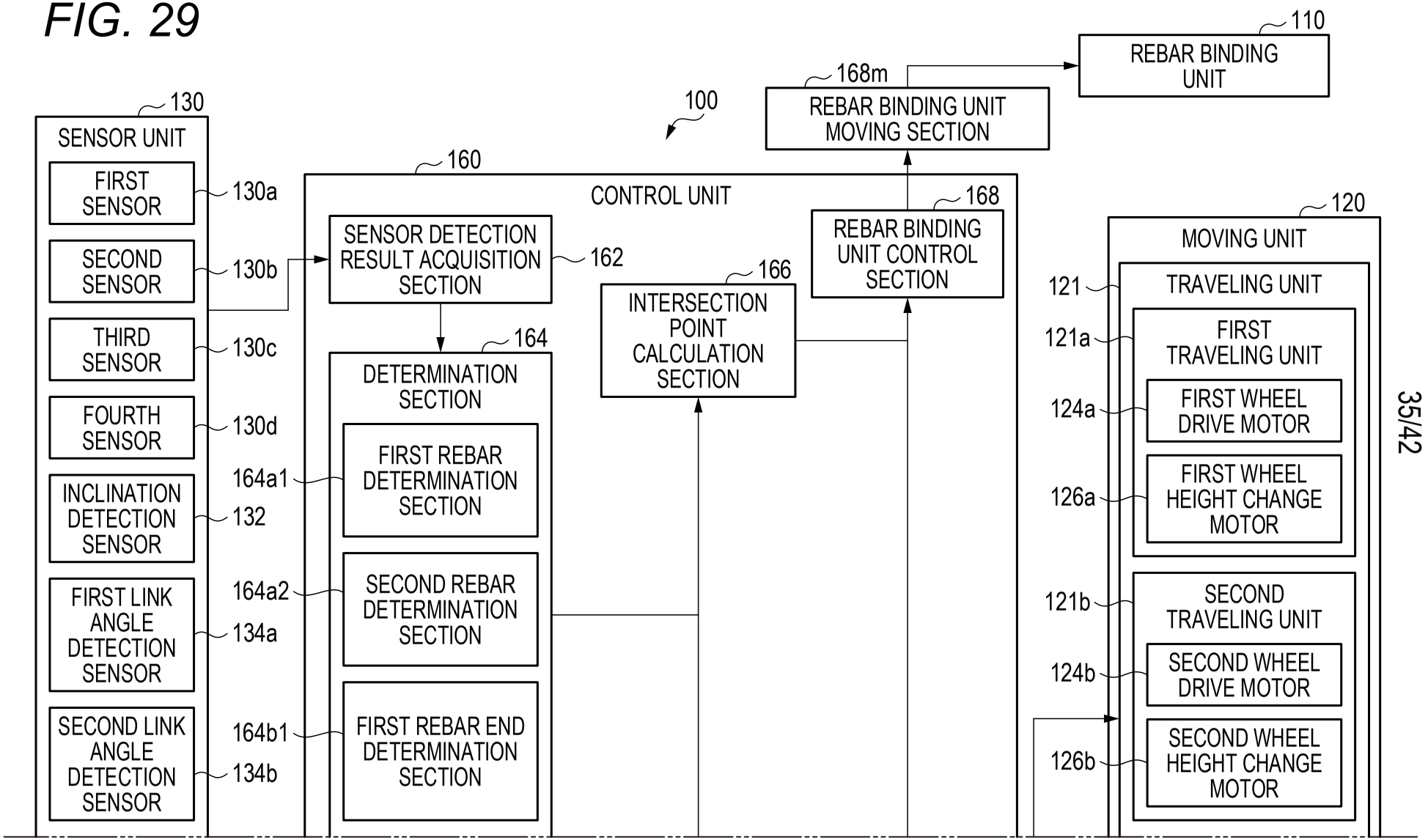
100
110
REBAR BINDING UNIT
168m
REBAR BINDING UNIT MOVING SECTION
130
SENSOR UNIT
FIRST SENSOR
130a
SECOND SENSOR
130b
THIRD SENSOR
130c
FOURTH SENSOR
130d
INCLINATION DETECTION SENSOR
132
FIRST LINK ANGLE DETECTION SENSOR
134a
SECOND LINK ANGLE DETECTION SENSOR
134b
160
CONTROL UNIT
SENSOR DETECTION RESULT ACQUISITION SECTION
162
164
DETERMINATION SECTION
164a1
FIRST REBAR DETERMINATION SECTION
164a2
SECOND REBAR DETERMINATION SECTION
164b1
FIRST REBAR END DETERMINATION SECTION
166
INTERSECTION POINT CALCULATION SECTION
168
REBAR BINDING UNIT CONTROL SECTION
120
MOVING UNIT
121
TRAVELING UNIT
121a
FIRST TRAVELING UNIT
124a
FIRST WHEEL DRIVE MOTOR
126a
FIRST WHEEL HEIGHT CHANGE MOTOR
121b
SECOND TRAVELING UNIT
124b
SECOND WHEEL DRIVE MOTOR
126b
SECOND WHEEL HEIGHT CHANGE MOTOR

(CONT.)

(FIG. 29 CONTINUED)

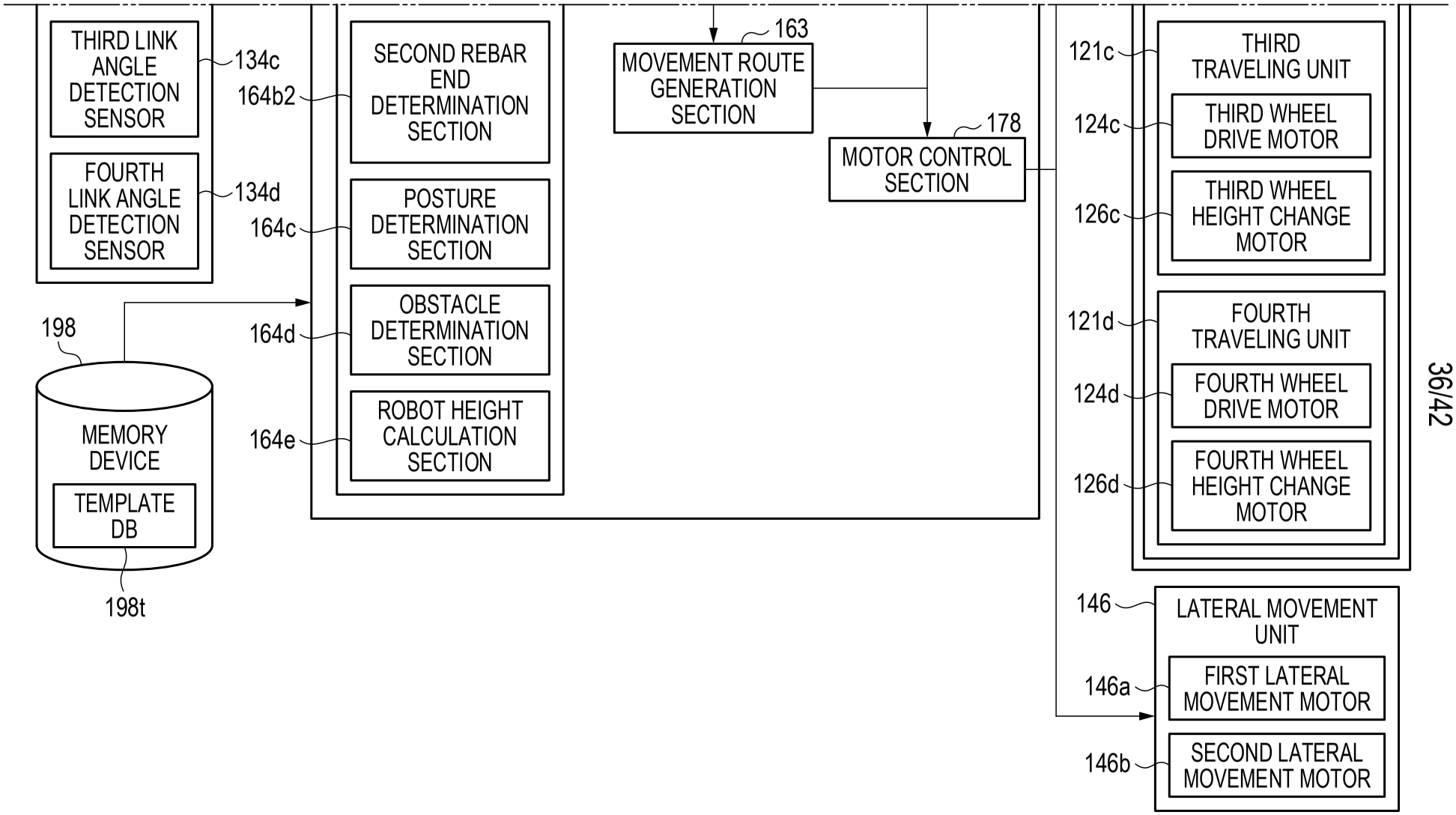

FIG. 30A

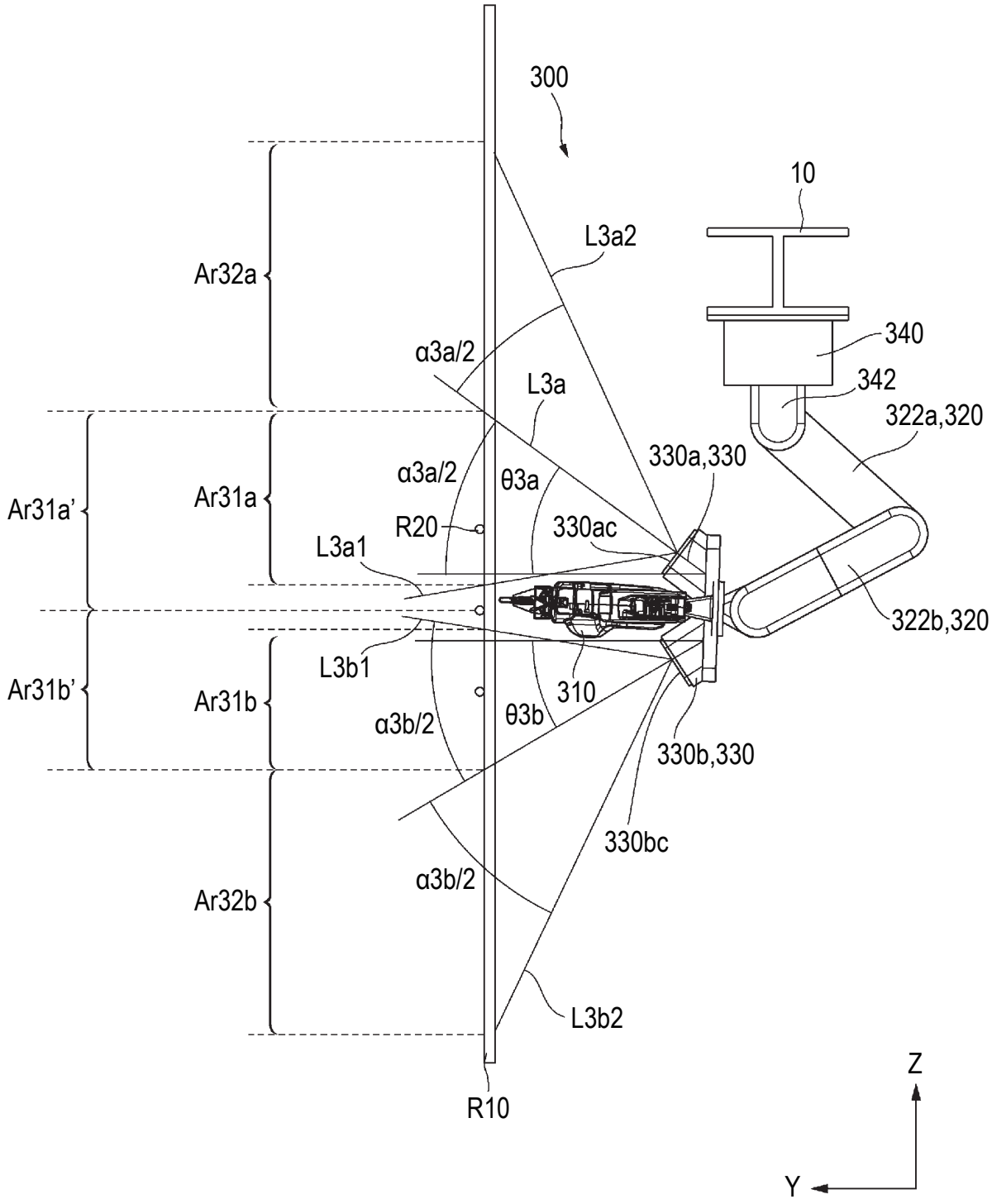
300
10
L3a2
Ar32a
α3a/2
340
342
L3a
322a,320
Ar31a'
Ar31a
α3a/2
θ3a
330a,330
R20
330ac
L3a1
322b,320
L3b1
Ar31b'
Ar31b
310
θ3b
α3b/2
330b,330
330bc
α3b/2
Ar32b
L3b2
R10
Z
Y

FIG. 30B

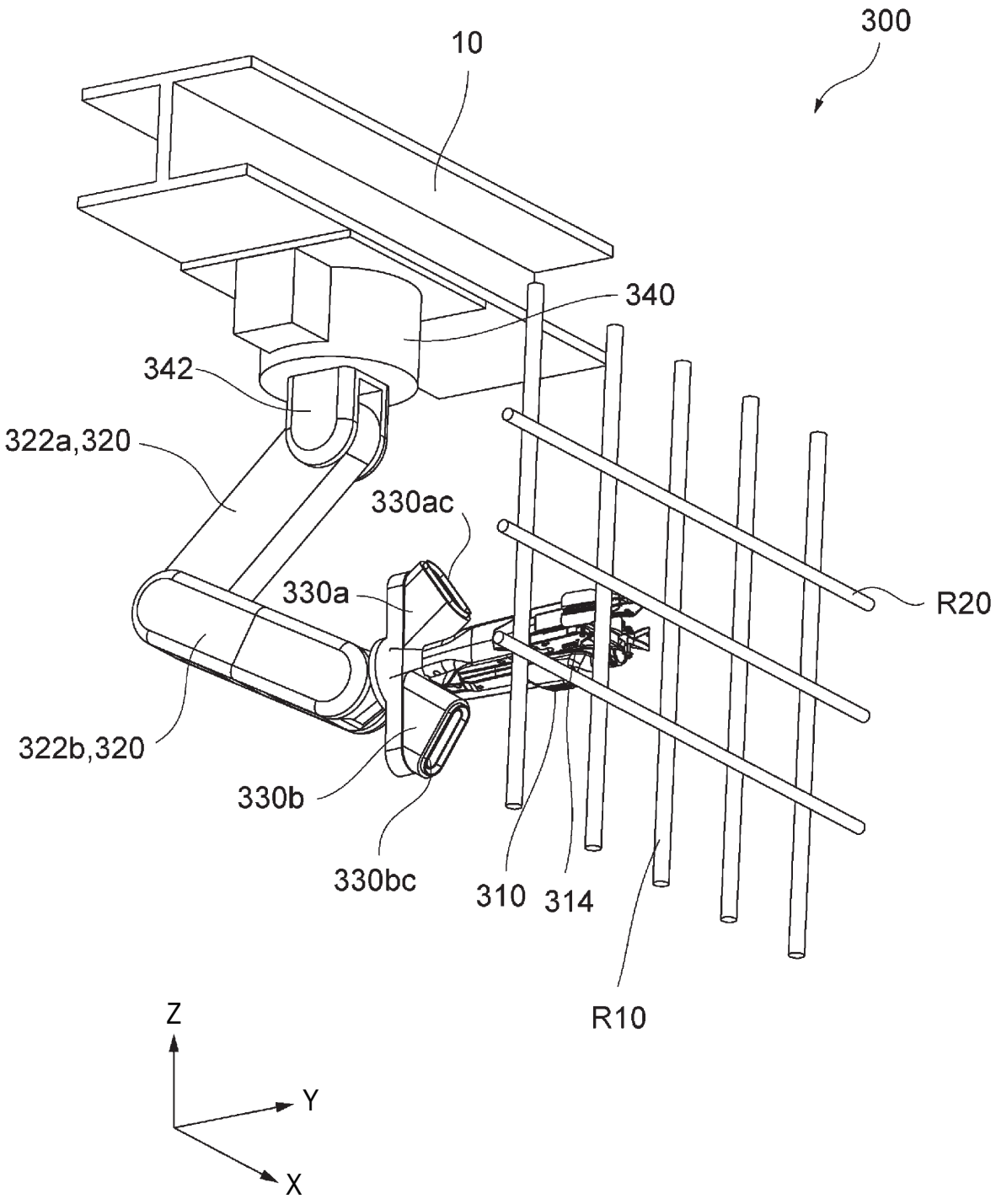
300
10
340
342
322a,320
330ac
330a
R20
322b,320
330b
330bc
310
314
R10
Z
Y
X

FIG. 31A

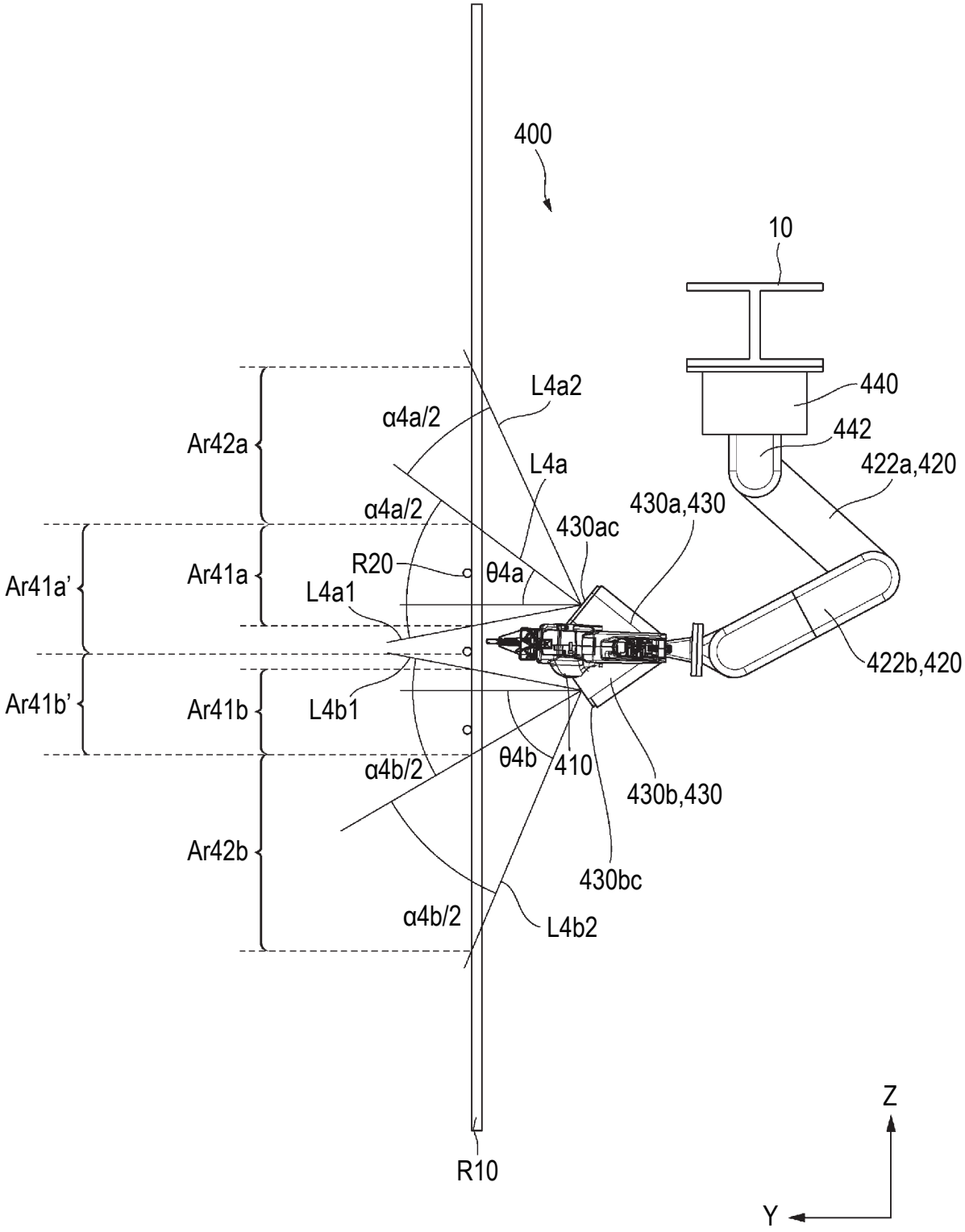
400
10
440
442
422a,420
422b,420
430a,430
430ac
430b,430
430bc
410
L4a2
L4a
L4a1
L4b1
L4b2
α4a/2
α4a/2
α4b/2
α4b/2
θ4a
θ4b
R20
R10
Ar42a
Ar41a
Ar41a'
Ar41b
Ar41b'
Ar42b
Z
Y

FIG. 31B

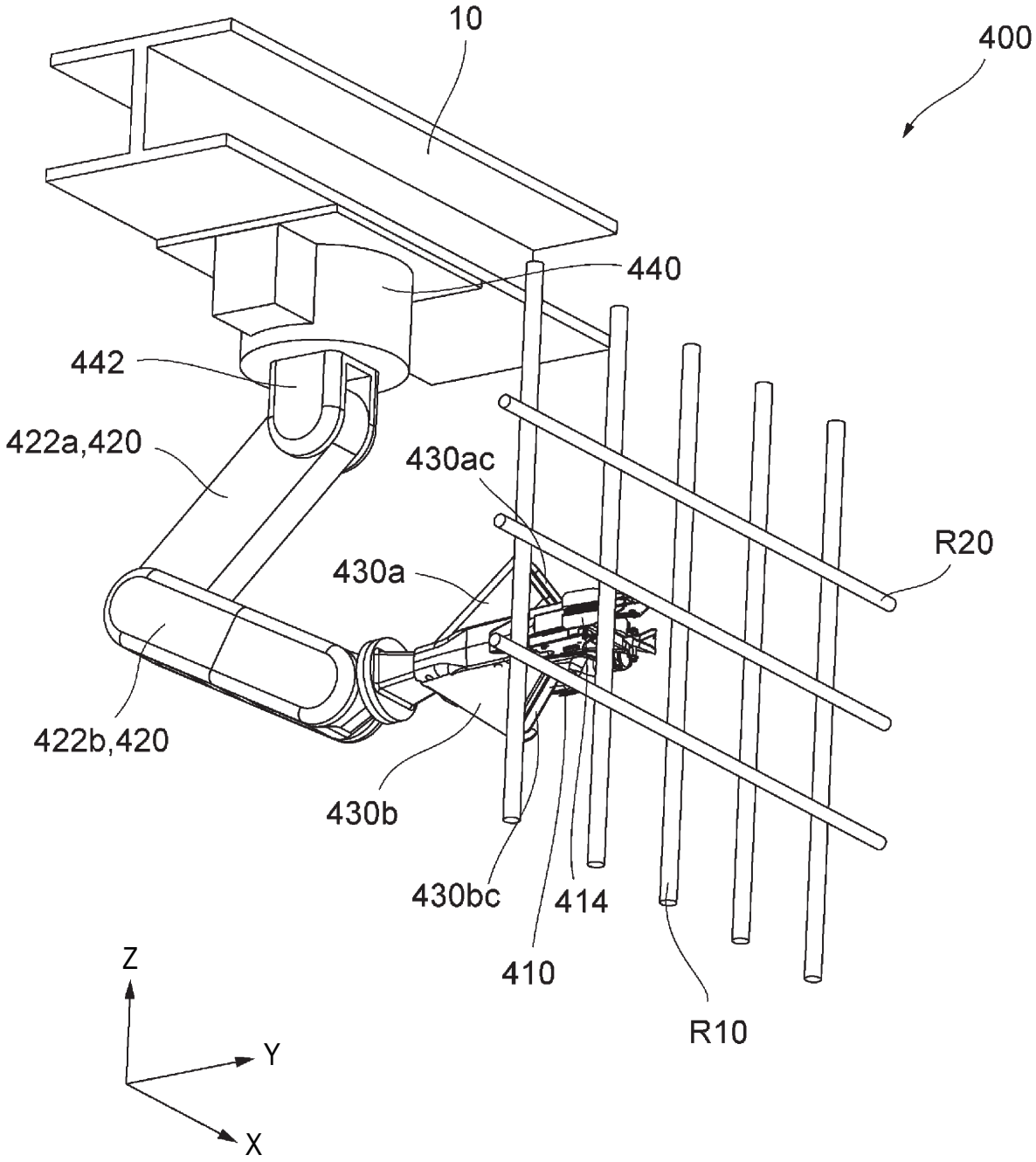
10
400
440
442
422a,420
430ac
R20
430a
422b,420
430b
430bc
414
410
R10
Z
Y
X

FIG. 32

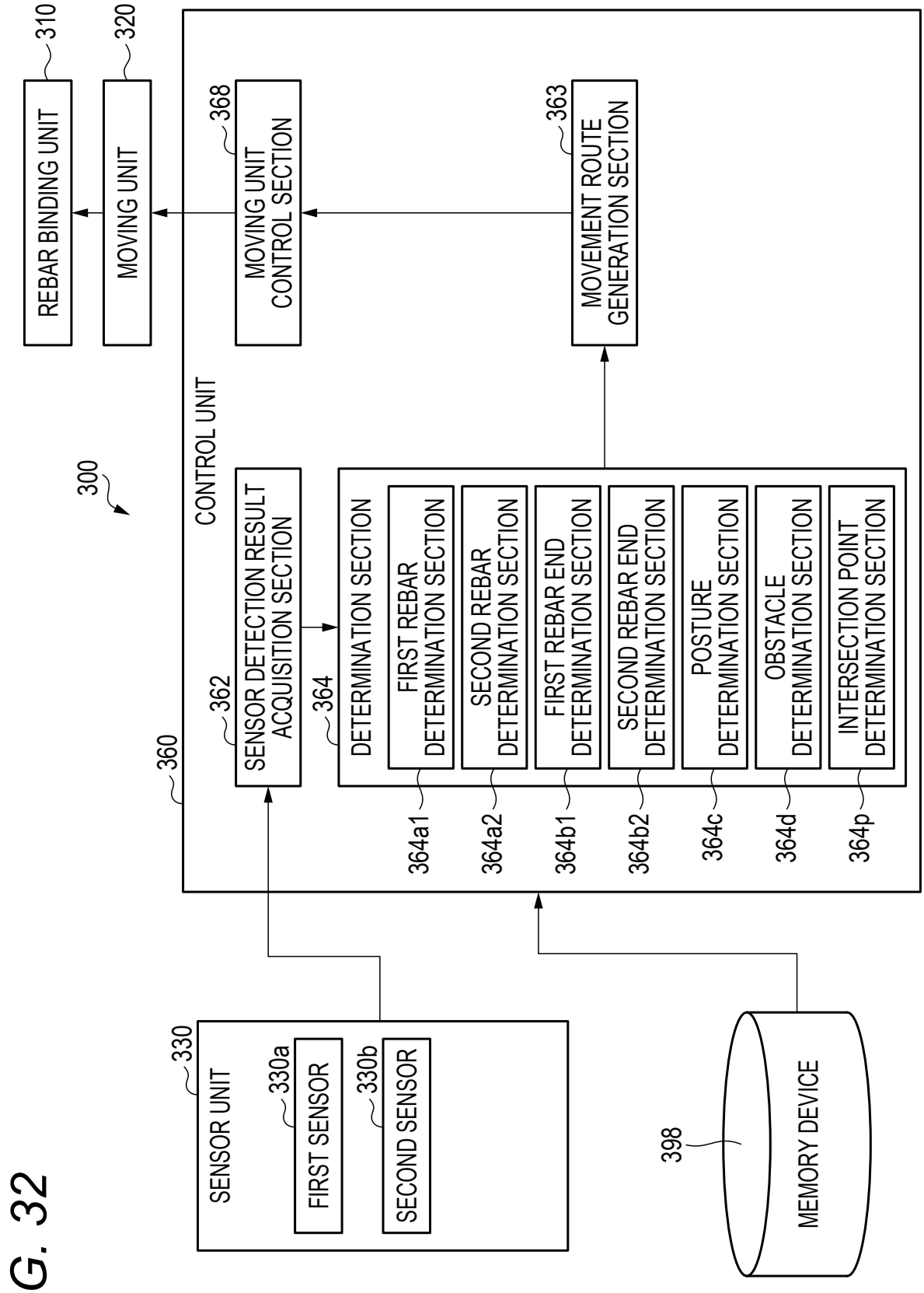
310
REBAR BINDING UNIT
320
MOVING UNIT
368
MOVING UNIT CONTROL SECTION
363
MOVEMENT ROUTE GENERATION SECTION
300
CONTROL UNIT
360
362
SENSOR DETECTION RESULT ACQUISITION SECTION
364
DETERMINATION SECTION
FIRST REBAR DETERMINATION SECTION
SECOND REBAR DETERMINATION SECTION
FIRST REBAR END DETERMINATION SECTION
SECOND REBAR END DETERMINATION SECTION
POSTURE DETERMINATION SECTION
OBSTACLE DETERMINATION SECTION
INTERSECTION POINT DETERMINATION SECTION
364a1
364a2
364b1
364b2
364c
364d
364p
330
SENSOR UNIT
330a
FIRST SENSOR
330b
SECOND SENSOR
398
MEMORY DEVICE

FIG. 33

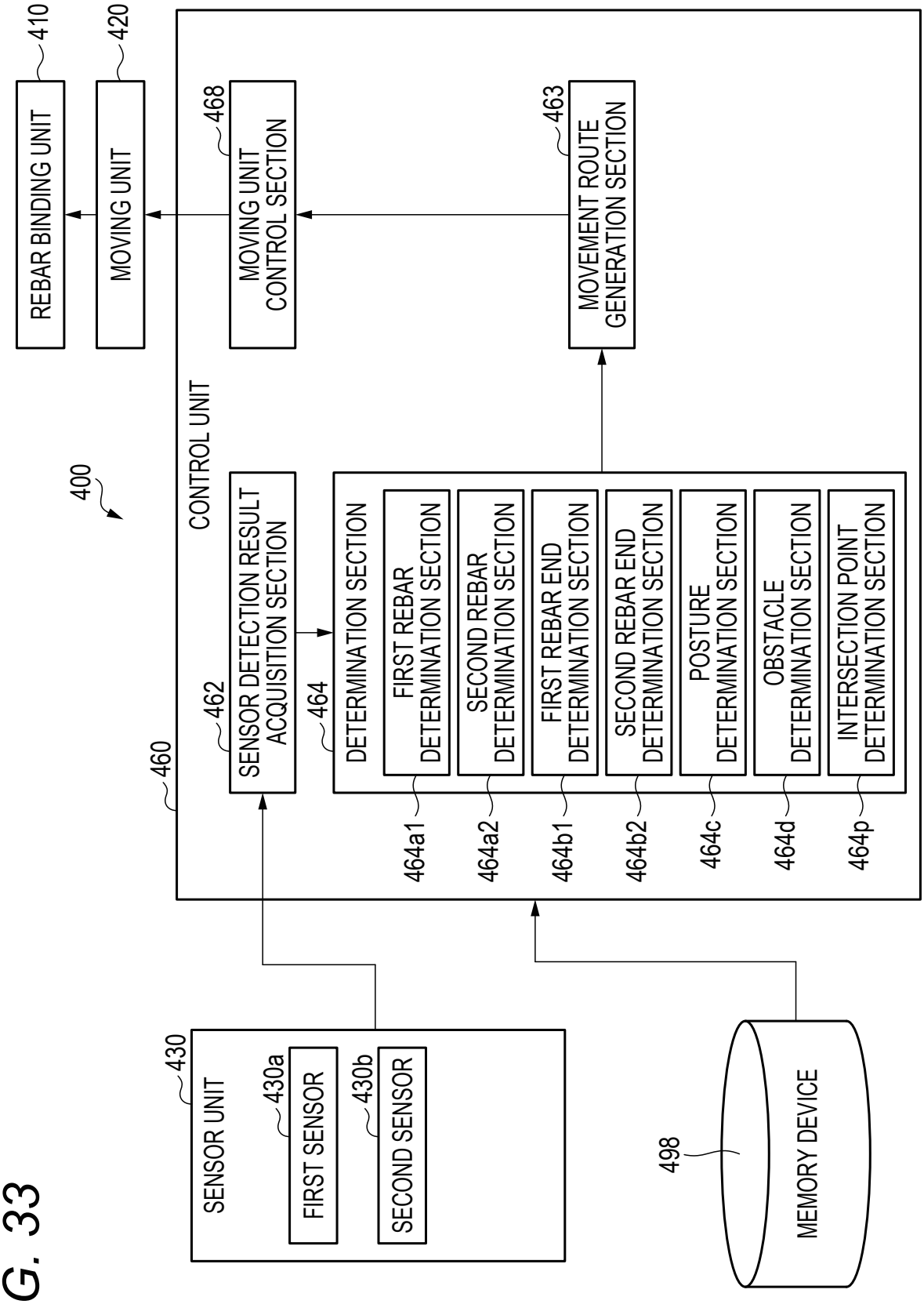
410
REBAR BINDING UNIT
420
MOVING UNIT
468
MOVING UNIT CONTROL SECTION
463
MOVEMENT ROUTE GENERATION SECTION
400
CONTROL UNIT
460
462
SENSOR DETECTION RESULT ACQUISITION SECTION
464
DETERMINATION SECTION
FIRST REBAR DETERMINATION SECTION
SECOND REBAR DETERMINATION SECTION
FIRST REBAR END DETERMINATION SECTION
SECOND REBAR END DETERMINATION SECTION
POSTURE DETERMINATION SECTION
OBSTACLE DETERMINATION SECTION
INTERSECTION POINT DETERMINATION SECTION
464a1
464a2
464b1
464b2
464c
464d
464p
430
SENSOR UNIT
430a
FIRST SENSOR
430b
SECOND SENSOR
498
MEMORY DEVICE