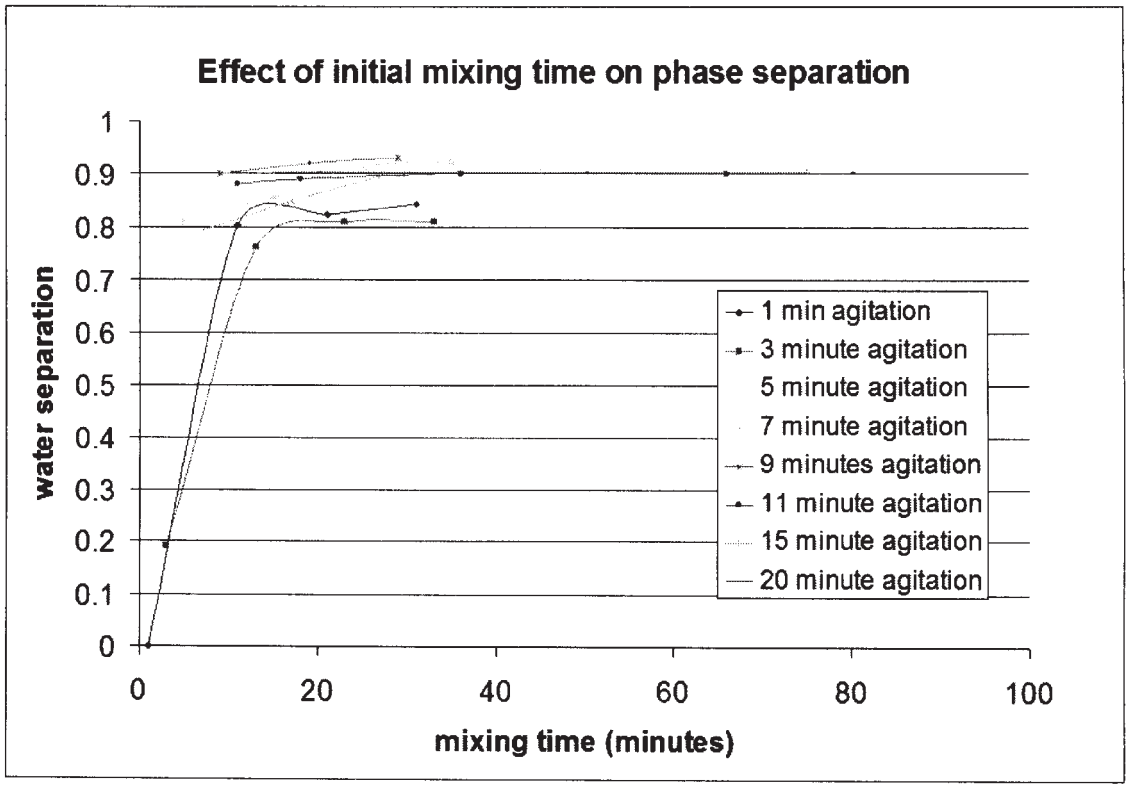

Figure 1

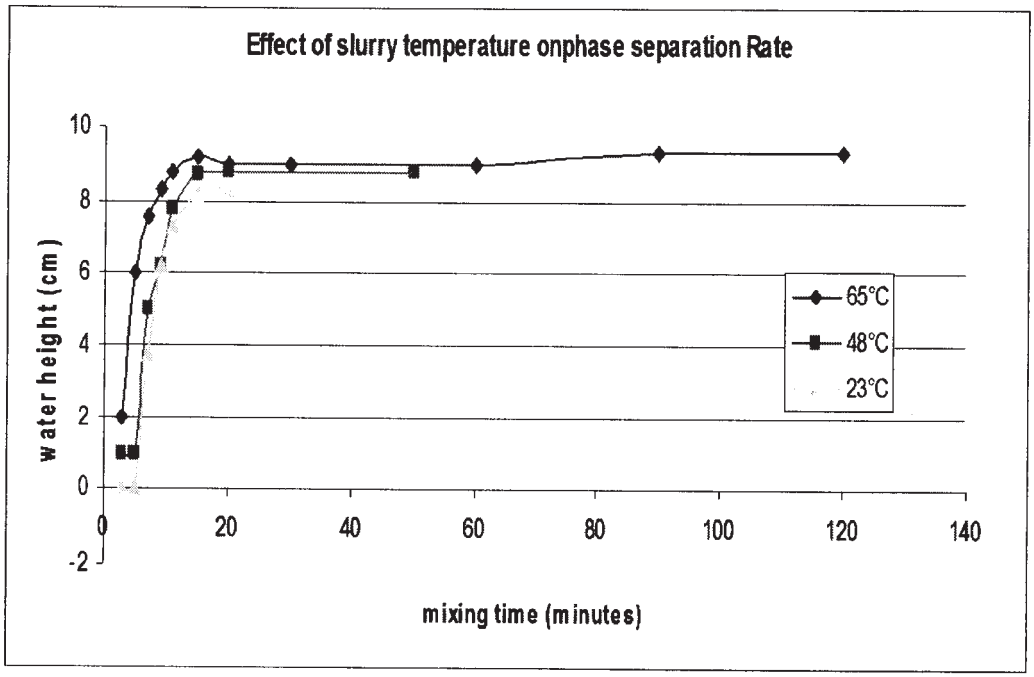

Figure 2

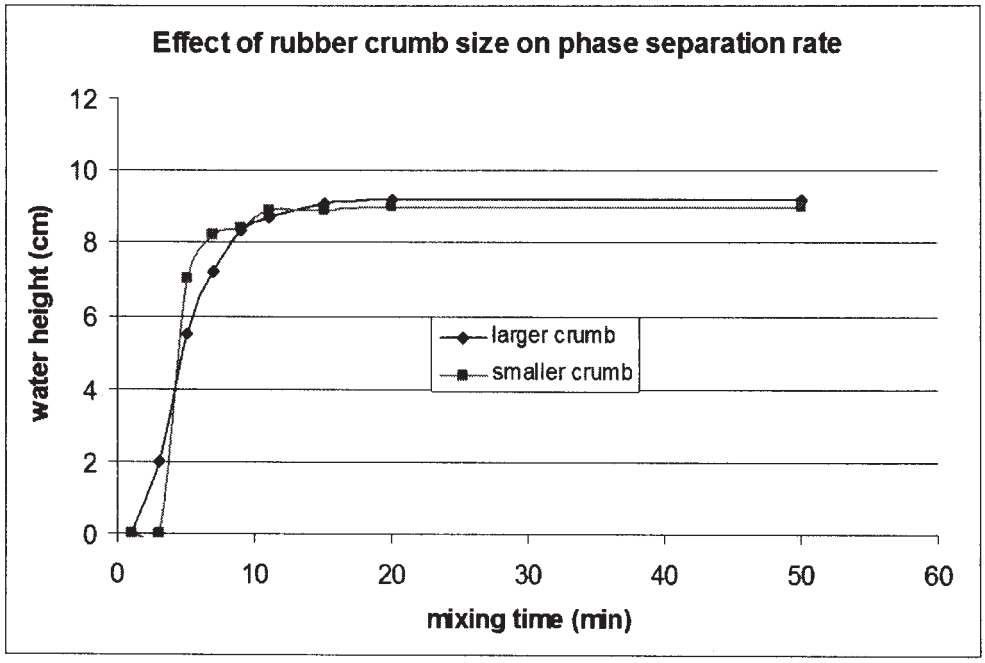

Figure 3

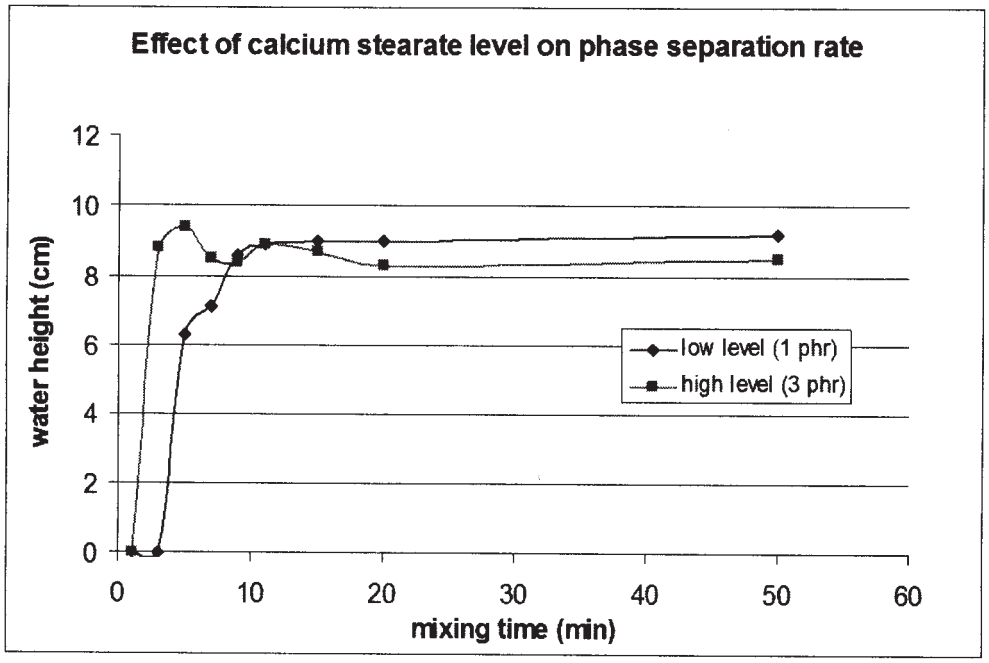

Figure 4

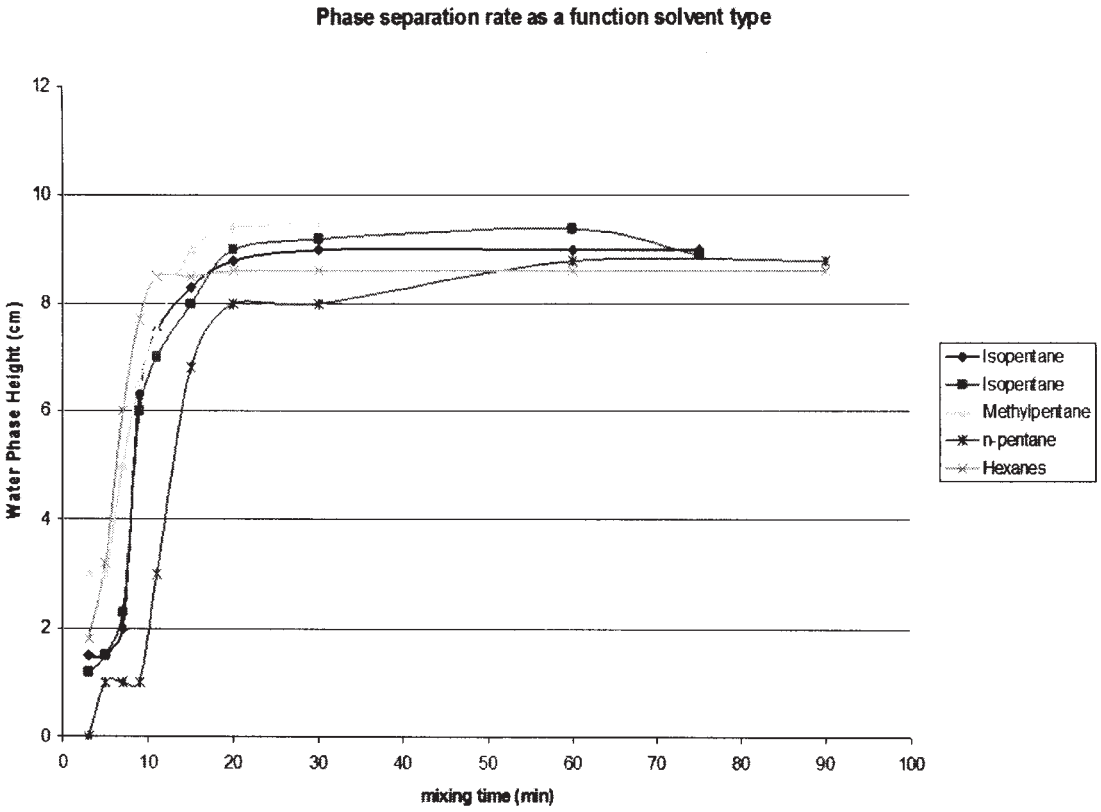

Figure 5

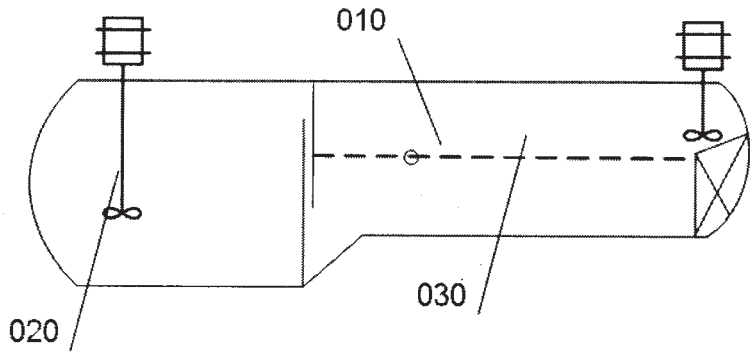

Figure 6

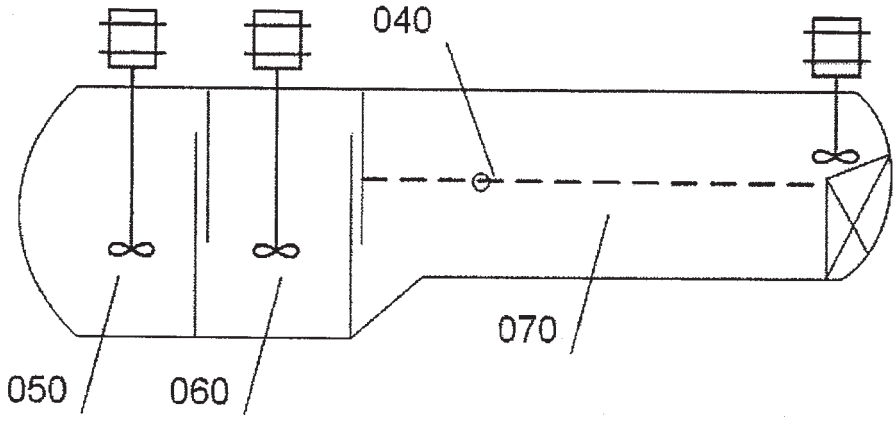

Figure 7

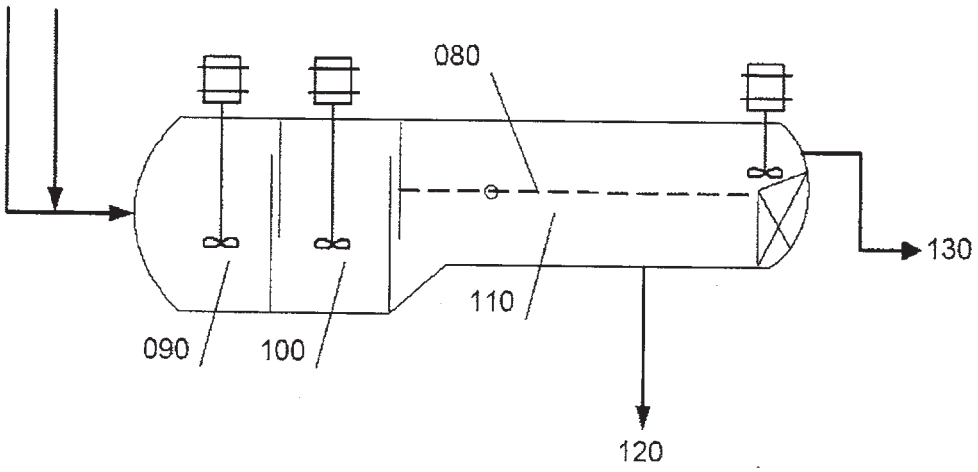

Figure 8

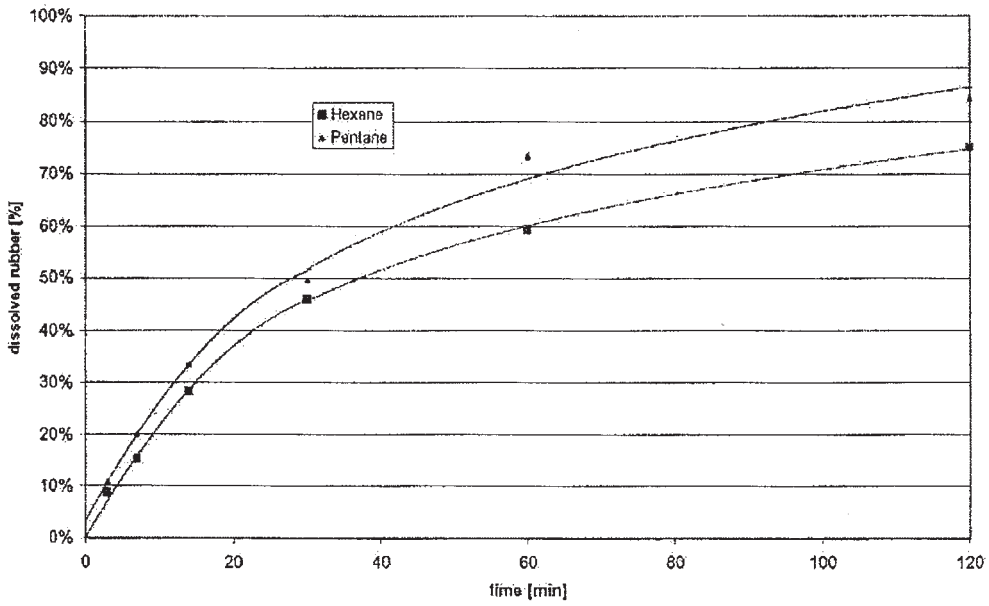

Figure 9

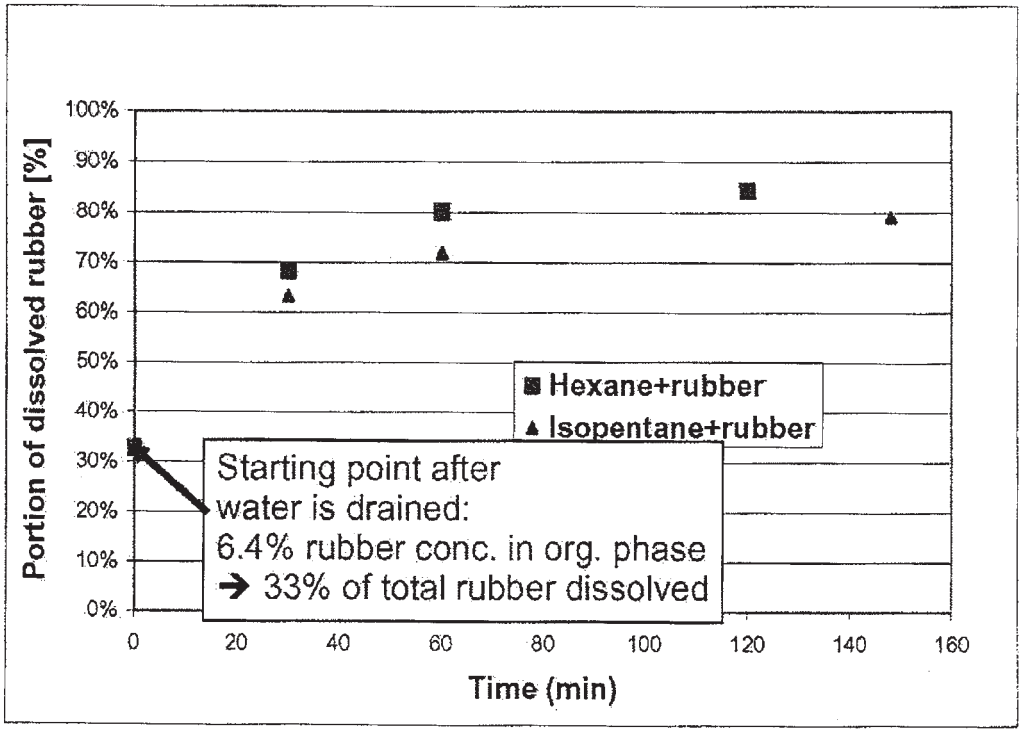

Figure 10

Figure 11

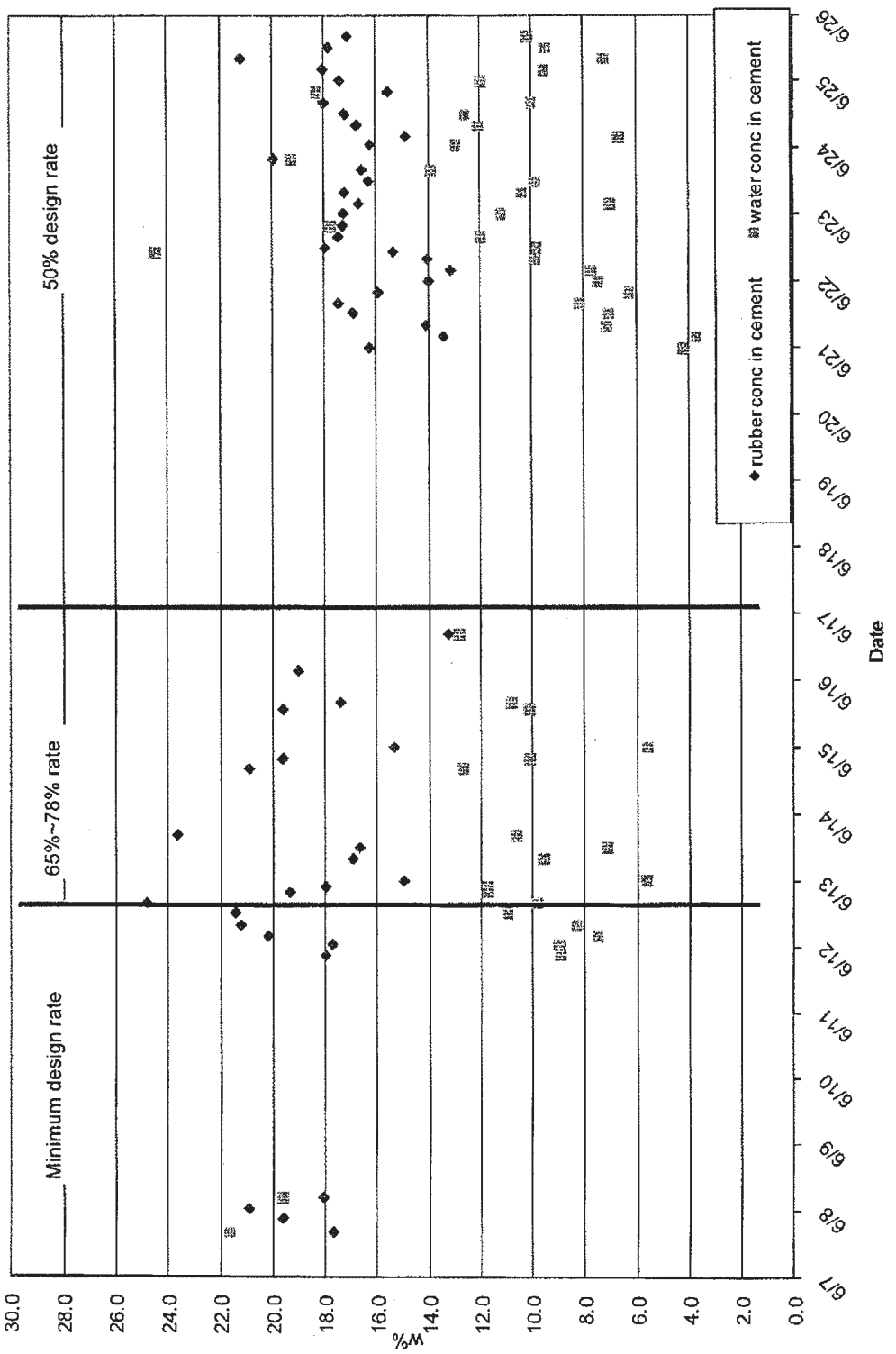
Minimum design rate
65%~78% rate
50% design rate
rubber conc in cement
water conc in cement
%W
Date
30.0
28.0
26.0
24.0
22.0
20.0
18.0
16.0
14.0
12.0
10.0
8.0
6.0
4.0
2.0
0.0
6/7
6/8
6/9
6/10
6/11
6/12
6/13
6/14
6/15
6/16
6/17
6/18
6/19
6/20
6/21
6/22
6/23
6/24
6/25
6/26

Figure 12

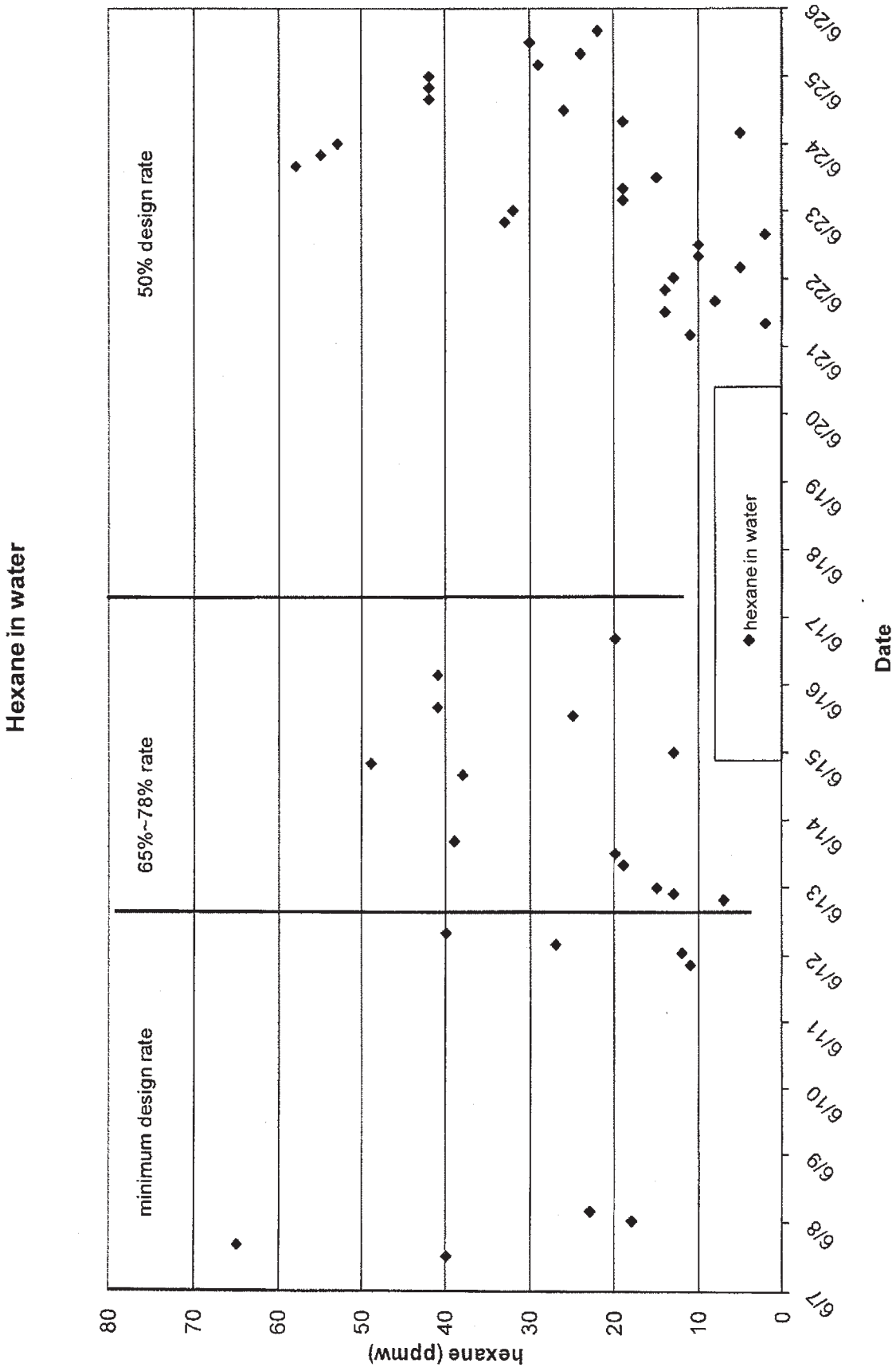
Hexane in water
minimum design rate
65%~78% rate
50% design rate
hexane in water
hexane (ppmw)
Date
0
10
20
30
40
50
60
70
80
6/7
6/8
6/9
6/10
6/11
6/12
6/13
6/14
6/15
6/16
6/17
6/18
6/19
6/20
6/21
6/22
6/23
6/24
6/25
6/26