FIG. 1

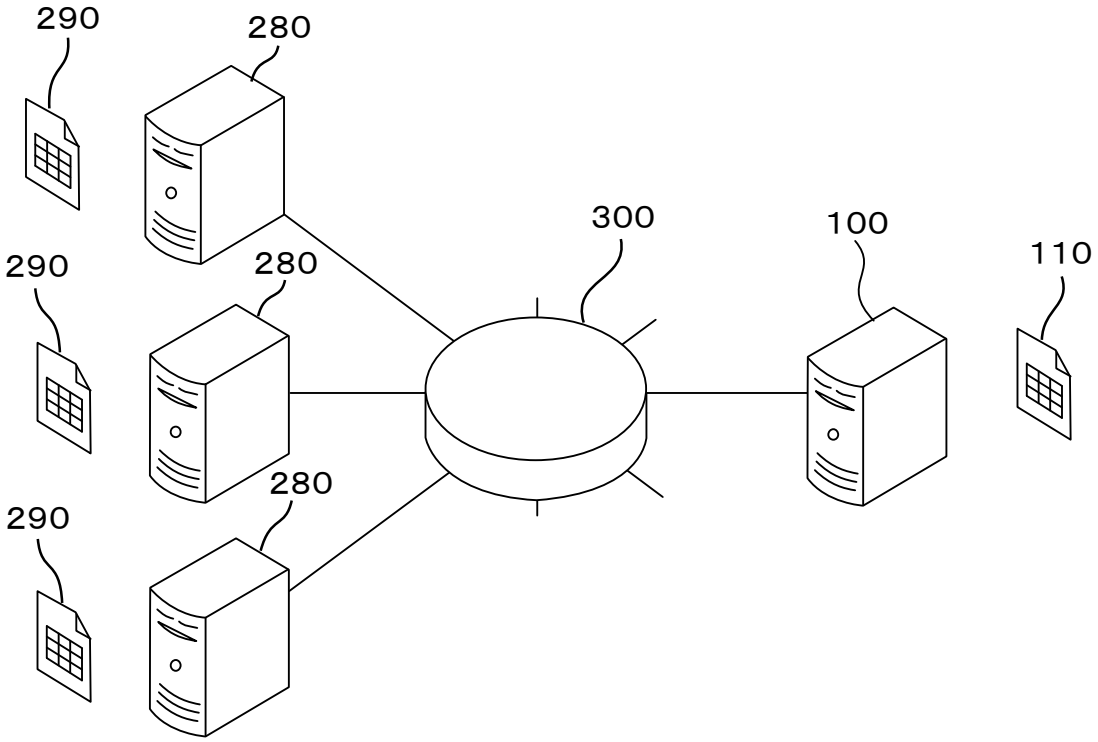

FIG. 2

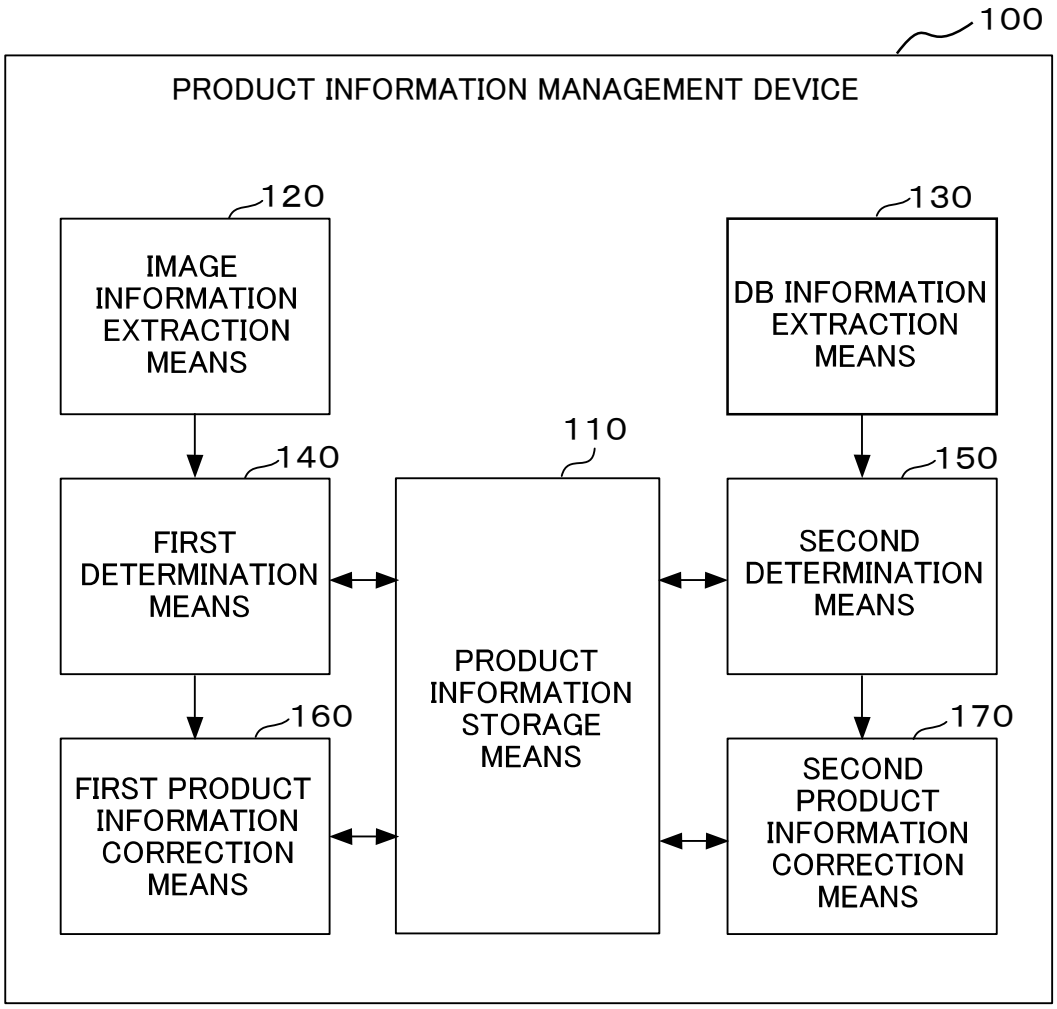
100
PRODUCT INFORMATION MANAGEMENT DEVICE
120
IMAGE INFORMATION EXTRACTION MEANS
130
DB INFORMATION EXTRACTION MEANS
110
140
FIRST DETERMINATION MEANS
PRODUCT INFORMATION STORAGE MEANS
150
SECOND DETERMINATION MEANS
160
FIRST PRODUCT INFORMATION CORRECTION MEANS
170
SECOND PRODUCT INFORMATION CORRECTION MEANS

FIG. 3

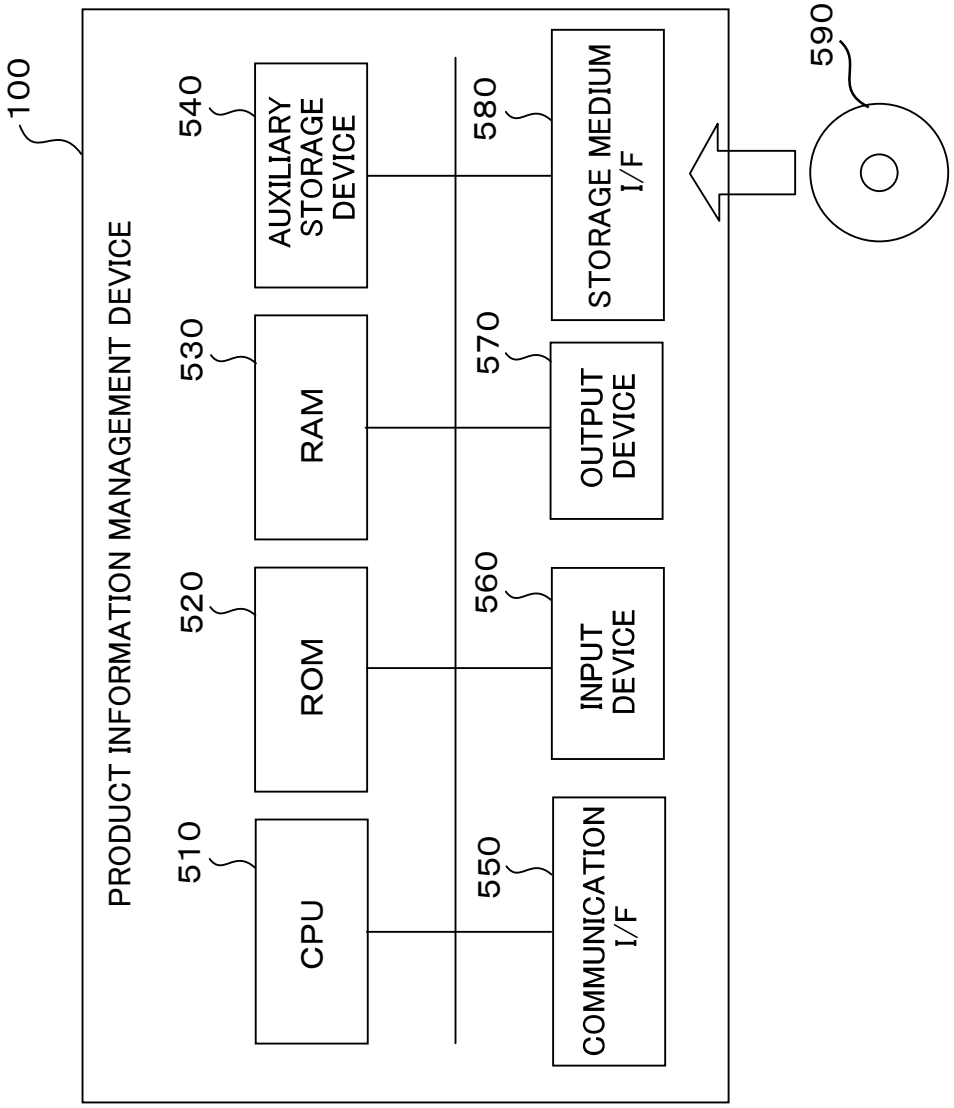
100
PRODUCT INFORMATION MANAGEMENT DEVICE
510
CPU
520
ROM
530
RAM
540
AUXILIARY STORAGE DEVICE
550
COMMUNICATION I/F
560
INPUT DEVICE
570
OUTPUT DEVICE
580
STORAGE MEDIUM I/F
590

FIG. 4

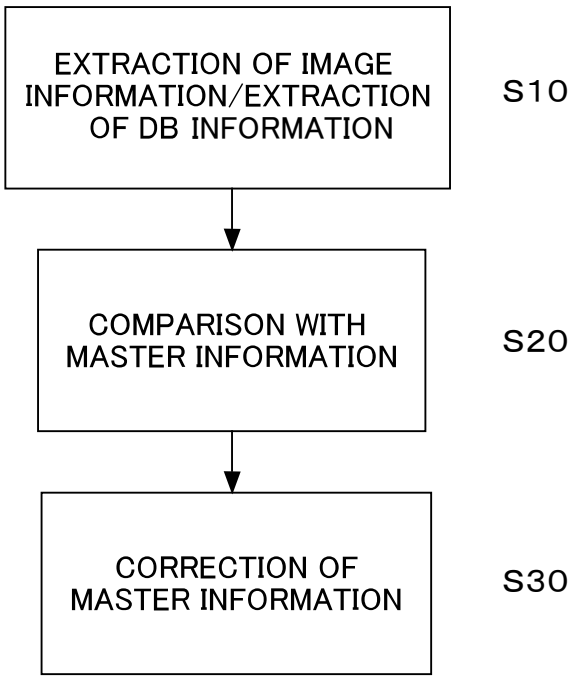
EXTRACTION OF IMAGE INFORMATION/EXTRACTION OF DB INFORMATION
S10
COMPARISON WITH MASTER INFORMATION
S20
CORRECTION OF MASTER INFORMATION
S30