Fig. 1

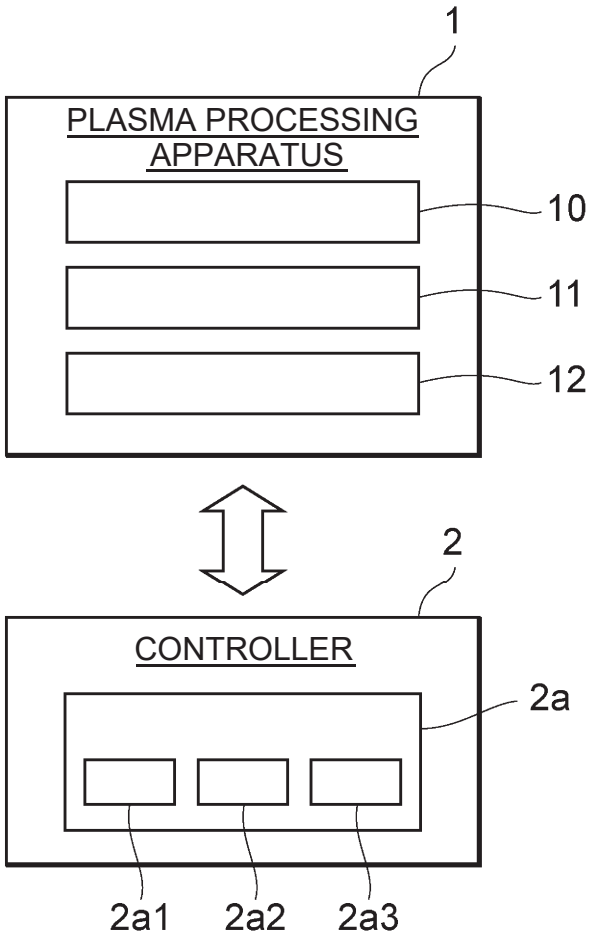
1
PLASMA PROCESSING APPARATUS
10
11
12
2
CONTROLLER
2a
2a1
2a2
2a3

Fig. 2

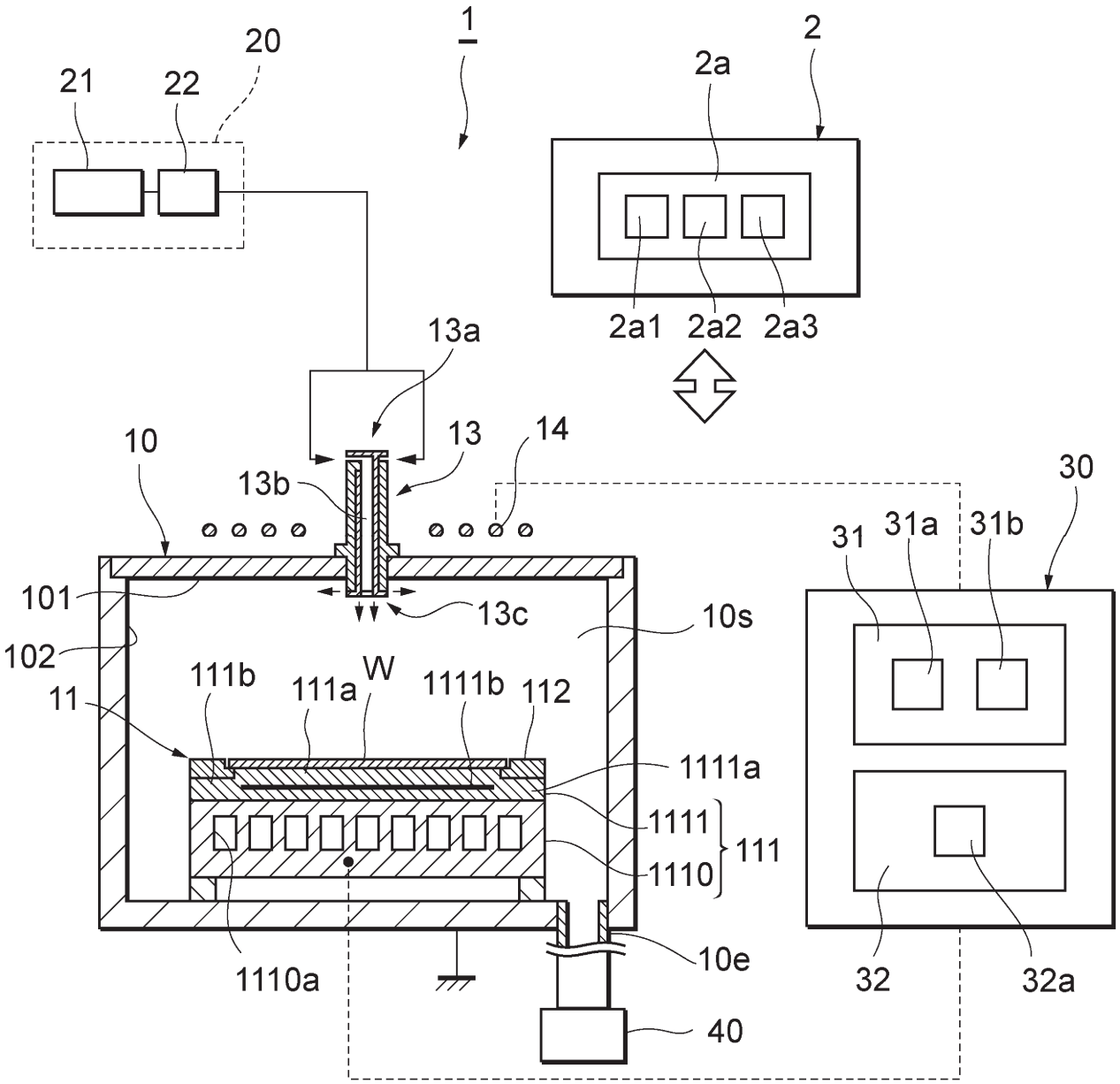
1
2
2a
20
21
22
2a1
2a2
2a3
13a
13
14
13b
10
30
31
31a
31b
101
13c
10s
102
11
111b
111a
W
1111b
112
1111a
1111
111
1110
1110a
10e
32
32a
40

Fig. 3

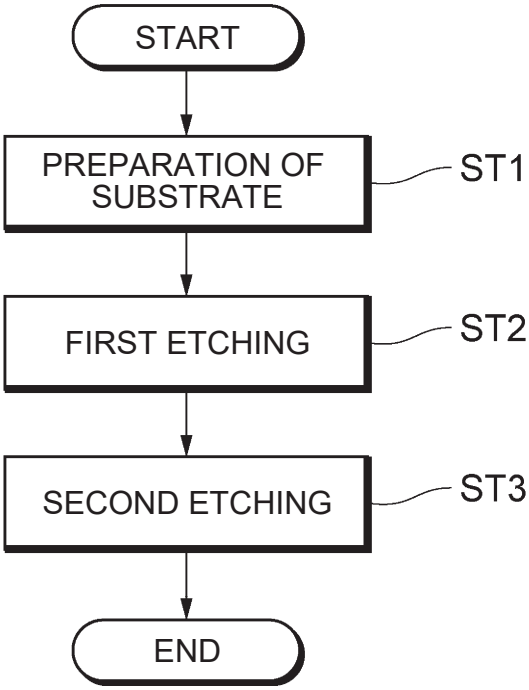
START
PREPARATION OF SUBSTRATE
ST1
FIRST ETCHING
ST2
SECOND ETCHING
ST3
END

Fig. 4

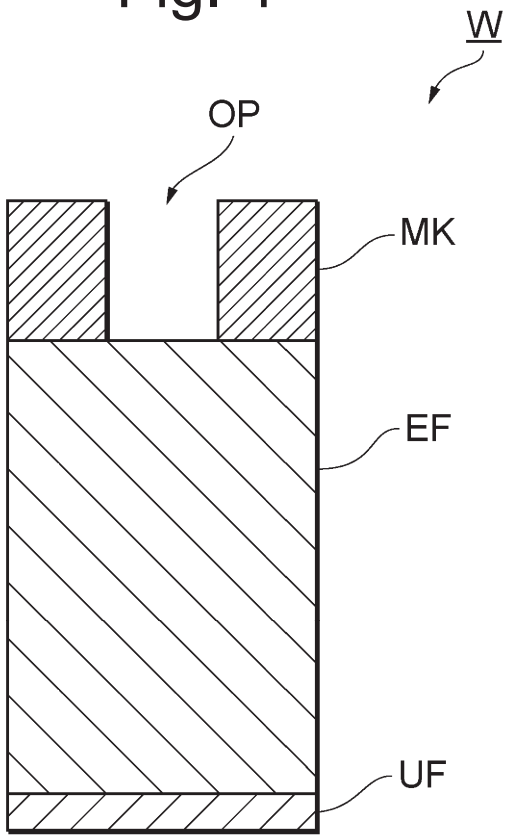
W
OP
MK
EF
UF

Fig. 5

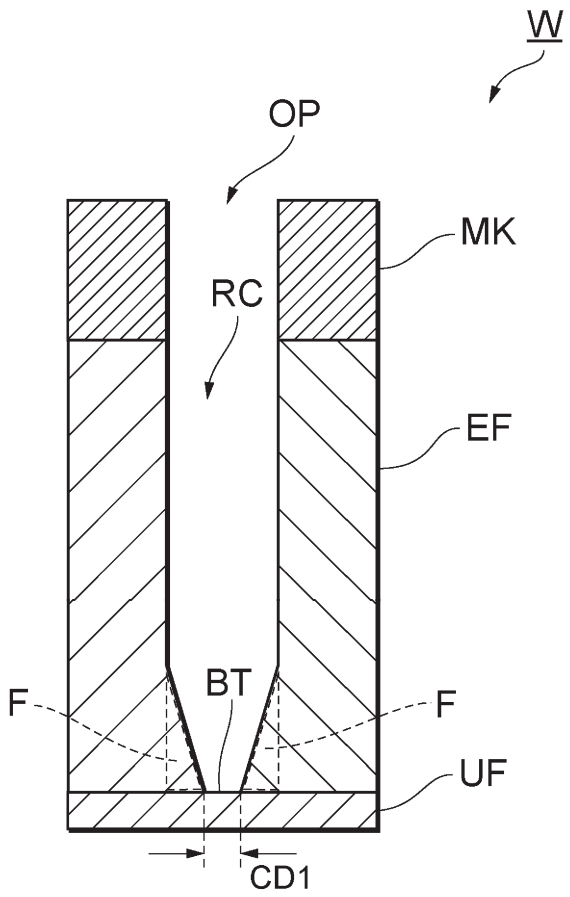

Fig. 6

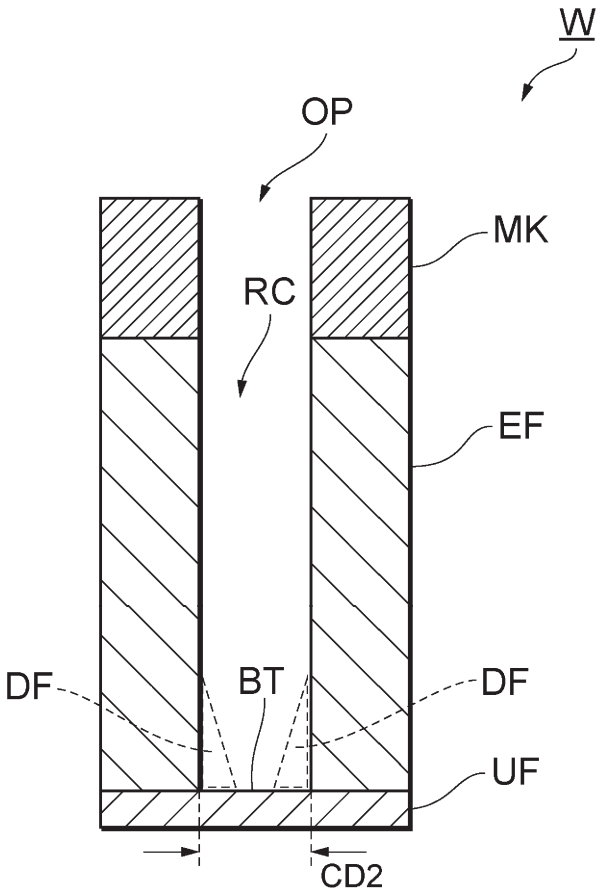
W
OP
MK
RC
EF
DF
BT
DF
UF
CD2

Fig. 7

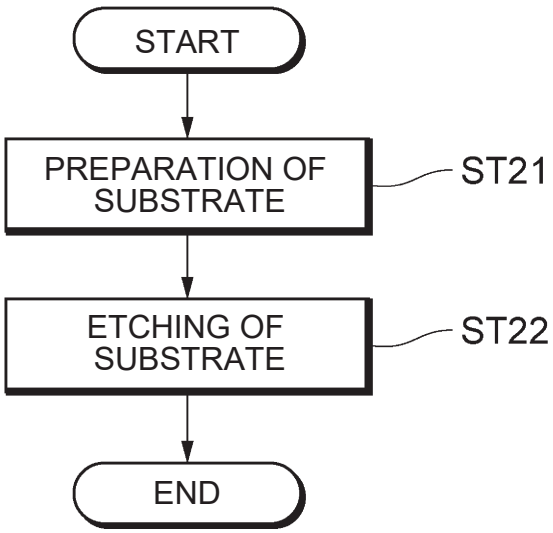
START
PREPARATION OF SUBSTRATE
ST21
ETCHING OF SUBSTRATE
ST22
END

Fig. 8

