
Pre-processing
Encoder
Signal Analysis & Metadata Correction
Transcoder
Decoder
Post-processing

FIG. 1

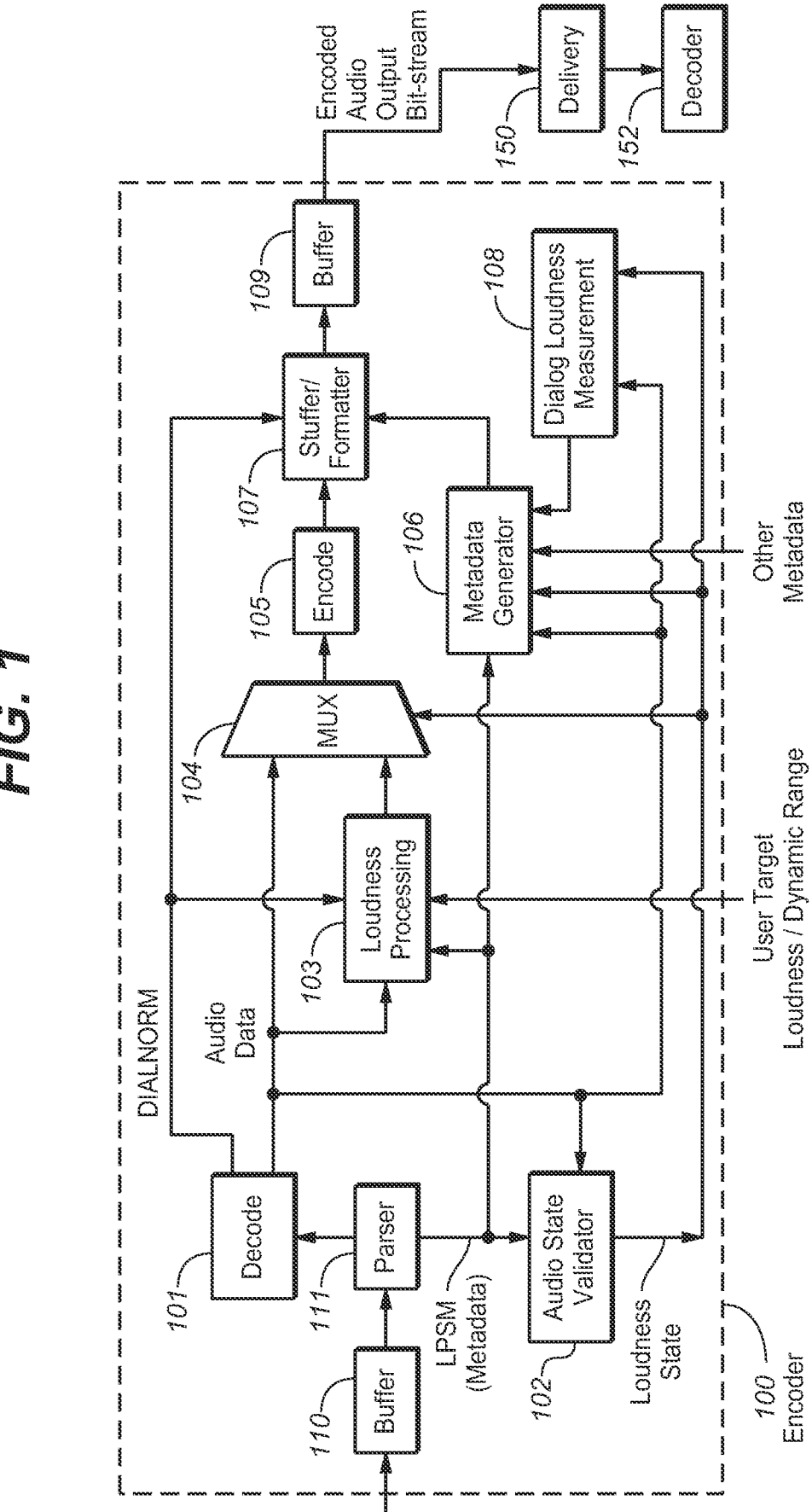
Audio Input Bit-stream
110
Buffer
111
Parser
101
Decode
DIALNORM
Audio Data
103
Loudness Processing
104
MUX
105
Encode
106
Metadata Generator
107
Stuffer/ Formatter
109
Buffer
Encoded Audio Output Bit-stream
108
Dialog Loudness Measurement
150
Delivery
152
Decoder
LPSM (Metadata)
102
Audio State Validator
Loudness State
100
Encoder
User Target Loudness / Dynamic Range
Other Metadata

FIG. 2

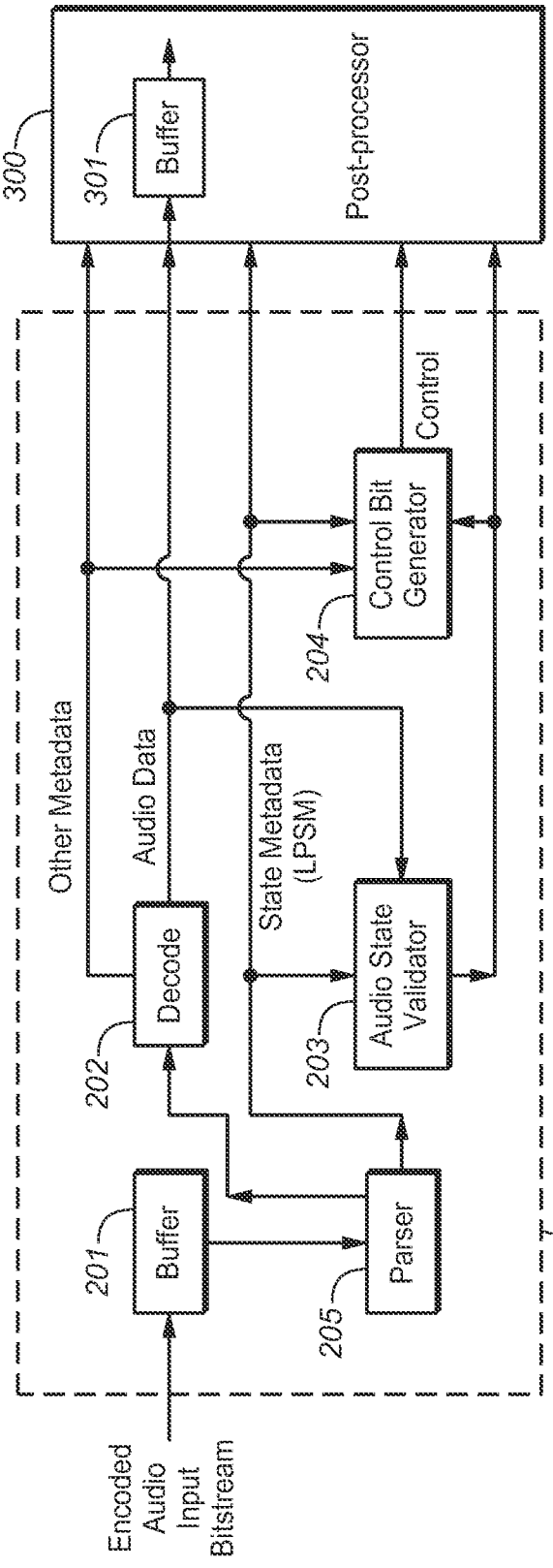
Encoded Audio Input Bitstream
Buffer
201
Decode
202
Audio State Validator
203
Control Bit Generator
204
Parser
205
Other Metadata
Audio Data
State Metadata (LPSM)
Control
Buffer
301
Post-processor
300
Decoder
200

FIG. 3

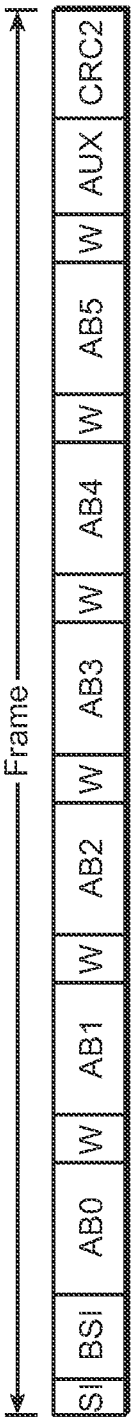

FIG. 4

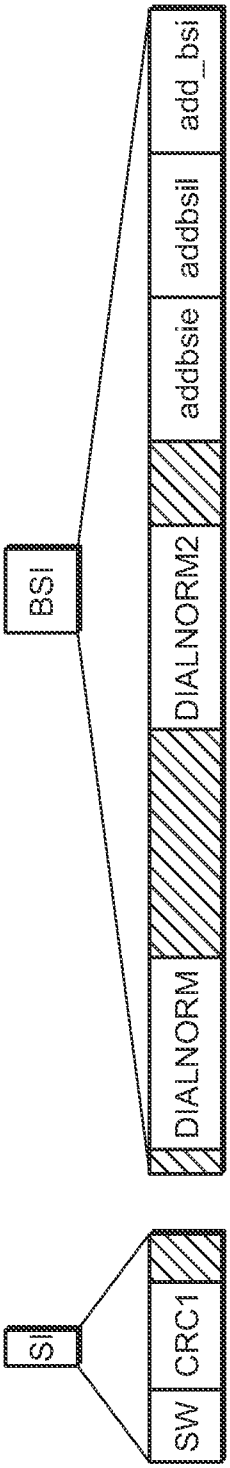

FIG. 5

FIG. 6

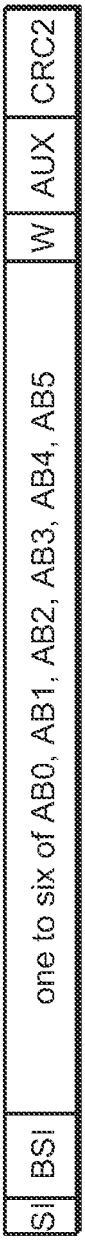

FIG. 7

Frame #	0	1	2	3	4	5	6	7	8	9	10	11	12	13	14	15	
Frames to Boundary	-16	-15	-14	-13	-12	-11	-10	-9	-8	-7	-6	-5	-4	-3	-2	-1	B
Program Boundary Flag Contents	100011	0	0	0	0	0	0	0	10011	0	0	0	1011	0	111	0	B
																	B
Exist	1	0	0	0	0	0	0	0	1	0	0	0	1	0	1	0	B
Frame Counter	0001->16								001->8				01->4		1->2		B
Count UP (+) / Down (-)	1								1						1		B

(Syntax of Program Boundary Flag Counting Down to Program Boundary)

FIG. 8

Frame #	B	0	1	2	3	4	5	6	7	8	9	10	11	12	13	14	15
Frames to Boundary	B	1	2	3	4	5	6	7	8	9	10	11	12	13	14	15	16
Program Boundary Flag Contents	B	0	110	0	1010	0	0	0	10010	0	0	0	0	0	0	0	10010
	B																
Exist	B	0	1	0	0	0	0	0	1	0	0	0	0	0	0	0	
Frame Counter	B		1->2		01->4				001->8								0001->16
Count UP (+) / Down (-)	B		0		0				0								0

(Syntax of Program Boundary Flag Counting Up for Beginning of Program)

FIG. 9

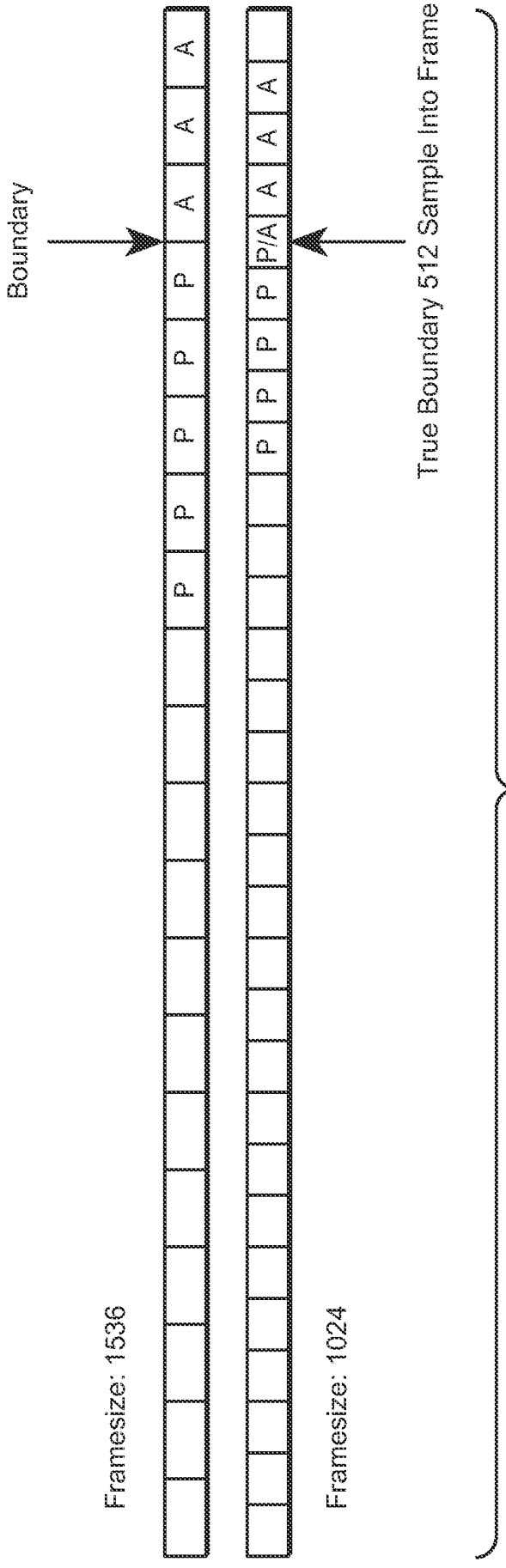
Boundary
Framesize: 1536
Framesize: 1024
True Boundary 512 Sample Into Frame
P
A
P/A

FIG. 10

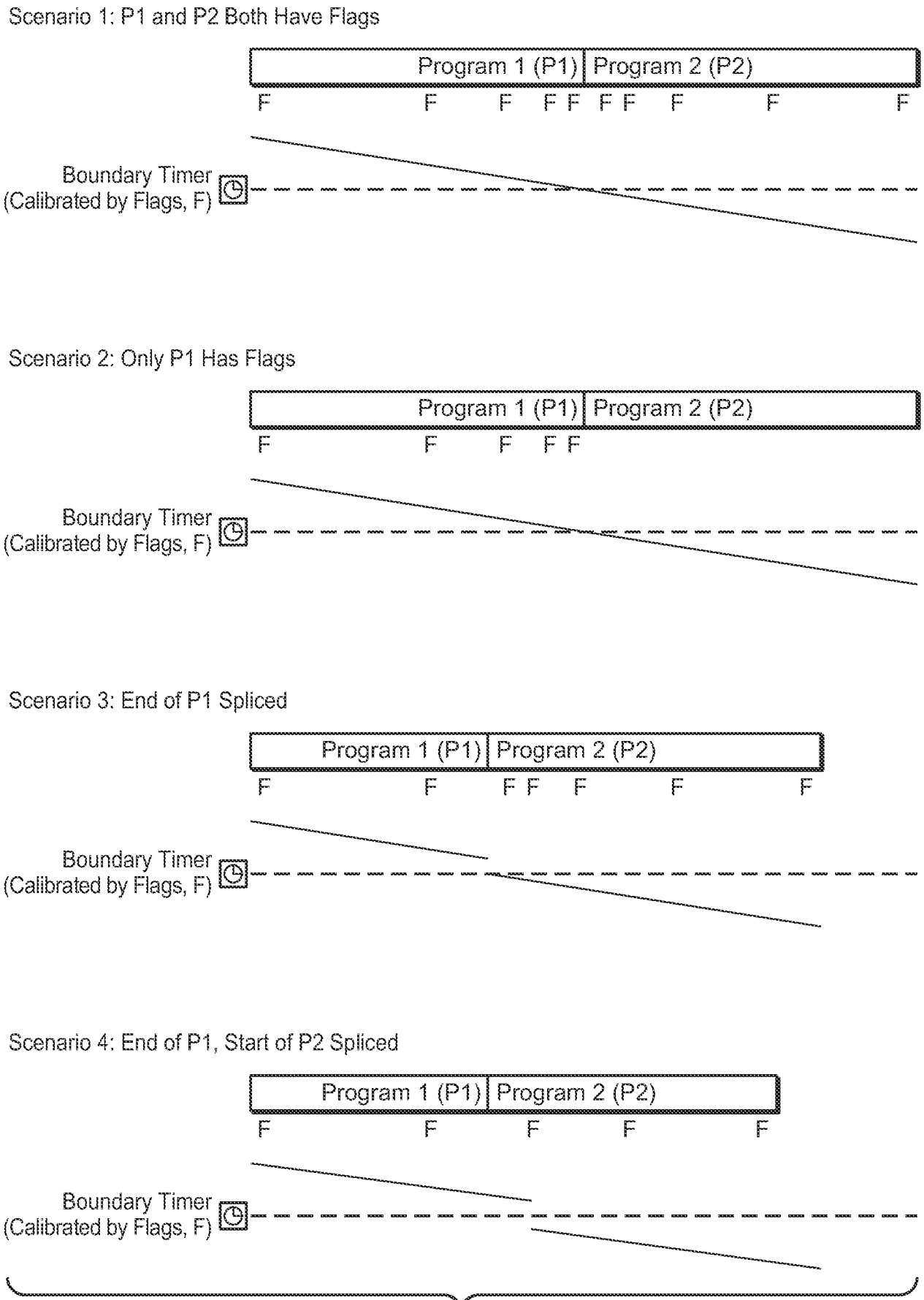
Scenario 1: P1 and P2 Both Have Flags
Program 1 (P1)
Program 2 (P2)
F F F F F F F F F F
Boundary Timer
(Calibrated by Flags, F)
Scenario 2: Only P1 Has Flags
Program 1 (P1)
Program 2 (P2)
F F F F F
Boundary Timer
(Calibrated by Flags, F)
Scenario 3: End of P1 Spliced
Program 1 (P1)
Program 2 (P2)
F F F F F F F
Boundary Timer
(Calibrated by Flags, F)
Scenario 4: End of P1, Start of P2 Spliced
Program 1 (P1)
Program 2 (P2)
F F F F F
Boundary Timer
(Calibrated by Flags, F)

FIG. 11