ABSTRACT OF THE DISCLOSURE

A metal-air fuel battery system with follow-up adjustment of a large-sized anode is provided, which relates to a technical field of a battery. The battery system includes a flexible case, a follow-up adjustment module and a drive mechanism, where the flexible case, as an electrochemical reaction space, is configured to accommodate an electrolyte solution and a metal ingot therein, and have a flexible air electrode embedded in an inner wall thereof; the follow-up adjustment module is configured to change a shape of the flexible case according to a size change of the metal ingot, to reduce the electrochemical reaction space; and the drive mechanism is configured to control action of the follow-up adjustment module.

ABSTRACT DRAWING

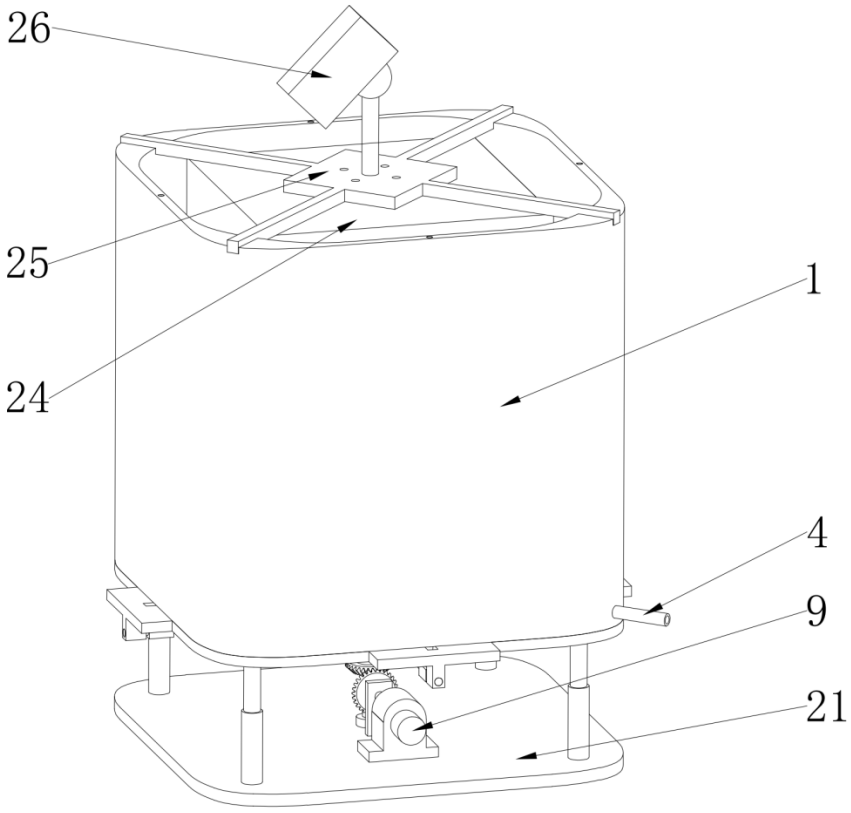

FIG. 6