(12) INTERNATIONAL APPLICATION PUBLISHED UNDER THE PATENT COOPERATION TREATY (PCT)

(19) World Intellectual Property Organization
International Bureau

(43) International Publication Date
09 October 2025 (09.10.2025)

WIPO | PCT

(10) International Publication Number
WO 2025/212507 A1

(51) International Patent Classification:
C23C 14/34 (2006.01) *H01J 37/34* (2006.01)
C23C 14/58 (2006.01) *H01J 37/305* (2006.01)

(21) International Application Number:
PCT/US2025/022310

(22) International Filing Date:
31 March 2025 (31.03.2025)

(25) Filing Language: English

(26) Publication Language: English

(30) Priority Data:
18/626,738 04 April 2024 (04.04.2024) US

(71) Applicant: **APPLIED MATERIALS, INC.** [US/US]; 3050 Bowers Avenue, Santa Clara, California 95054 (US).

(72) Inventors: **MEBARKI, Bencherki**; c/o Applied Materials,Inc., Law Dept., M/S 1269, 3050 Bowers Avenue, Santa Clara, California 95054 (US). **LEE, Joung Joo**; c/o Applied Materials,Inc., Law Dept., M/S 1269, 3050 Bowers Avenue, Santa Clara, California 95054 (US).

(74) Agent: **STEVENS, Joseph J.** et al.; Patterson & Sheridan, LLP., 24 Greenway Plaza, Suite 1600, Houston, Texas 77046 (US).

(81) Designated States *(unless otherwise indicated, for every kind of national protection available)*: AE, AG, AL, AM, AO, AT, AU, AZ, BA, BB, BG, BH, BN, BR, BW, BY, BZ, CA, CH, CL, CN, CO, CR, CU, CV, CZ, DE, DJ, DK, DM, DO, DZ, EC, EE, EG, ES, FI, GB, GD, GE, GH, GM, GT, HN, HR, HU, ID, IL, IN, IQ, IR, IS, IT, JM, JO, JP, KE, KG, KH, KN, KP, KR, KW, KZ, LA, LC, LK, LR, LS, LU, LY, MA, MD, MG, MK, MN, MU, MW, MX, MY, MZ, NA, NG, NI, NO, NZ, OM, PA, PE, PG, PH, PL, PT, QA, RO, RS, RU, RW, SA, SC, SD, SE, SG, SK, SL, ST, SV, SY, TH, TJ, TM, TN, TR, TT, TZ, UA, UG, US, UY, UZ, VC, VN, WS, ZA, ZM, ZW.

(84) Designated States *(unless otherwise indicated, for every kind of regional protection available)*: ARIPO (BW, CV, GH, GM, KE, LR, LS, MW, MZ, NA, RW, SC, SD, SL, ST, SZ, TZ, UG, ZM, ZW), Eurasian (AM, AZ, BY, KG, KZ, RU, TJ, TM), European (AL, AT, BE, BG, CH, CY, CZ, DE, DK, EE, ES, FI, FR, GB, GR, HR, HU, IE, IS, IT, LT, LU, LV, MC, ME, MK, MT, NL, NO, PL, PT, RO, RS, SE,

(54) **Title:** DELIVERY OF PULSED VOLTAGE WAVEFORMS TO IMPROVE STEP COVERAGE AND DAMAGE CONTROL

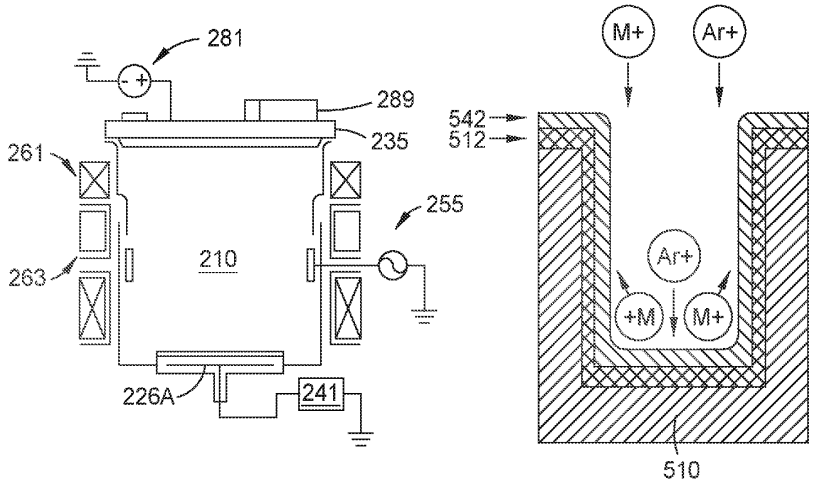

FIG. 5D

(57) **Abstract:** Embodiments of the disclosure include a method for fabricating a semiconductor device, comprising: forming, within a physical vapor deposition (PVD) chamber, a first layer by use of a PVD process on a surface of substrate that comprises a plurality of features formed therein, wherein forming the first layer comprises biasing a target within the process chamber; and etching, within the PVD chamber, at least a portion of the first layer. The etching process comprises: applying a substrate bias to an electrode disposed within a substrate support near a substrate receiving surface, wherein applying the substrate bias comprises delivering a pulsed-voltage (PV) waveform to the electrode; and exposing the substrate to a plasma generated within the PVD chamber.

WO 2025/212507 A1

[Continued on next page]

SI, SK, SM, TR), OAPI (BF, BJ, CF, CG, CI, CM, GA, GN, GQ, GW, KM, ML, MR, NE, SN, TD, TG).

Published:

— *with international search report (Art. 21(3))*