03 OCT 2003

20030058823

*162162*

(12) INTERNATIONAL APPLICATION PUBLISHED UNDER THE PATENT COOPERATION TREATY (PCT)

(19) World Intellectual Property Organization
International Bureau

(43) International Publication Date
17 October 2002 (17.10.2002)

PCT

(10) International Publication Number
WO 02/081184 A1

(51) International Patent Classification[7]: B29D 11/00, B29C 37/00

(21) International Application Number: PCT/US02/10741

(22) International Filing Date: 5 April 2002 (05.04.2002)

(25) Filing Language: English

(26) Publication Language: English

(30) Priority Data:
09/827,995 6 April 2001 (06.04.2001) US

(71) Applicant: JOHNSON & JOHNSON VISION CARE, INC. [US/US]; 7500 Centurian Parkway, Suite 100, Jacksonville, FL 32256 (US).

(72) Inventors: PEGRAM, Steven, C.; 1104 Avondale Place, Jacksonville, FL 32259 (US). KIMBLE, Allen, W.; 5085 Bradford Road, Jacksonville, FL 32217 (US). VOSS, Leslie, A.; 10263 Whispering Forest Drive, Jacksonville, FL 32257 (US). BINGAMAN, Thomas, P.; 308 Village Green Avenue, Jacksonville, FL 32259 (US). RICARD, Joseph, W.; 14265 Falconhead Court, Jacksonville, FL 32224 (US). KERNICK, Edward; 3827 Fairbanks Forest Drive, Jacksonville, FL 32223 (US). HOOD, Charles; 201 Stawberry Lane, Jacksonville, FL 32259 (US). DARABI, Tony; 136 Crosstide Ponte, Ponte Vedra Beach, FL 32082 (US).

(74) Agents: JOHNSON, Philip, S. et al.; Johnson & Johnson, One Johnson & Johnson Plaza, New Brunswick, NJ 08933 (US).

(81) Designated States *(national)*: AE, AG, AL, AM, AT, AU, AZ, BA, BB, BG, BR, BY, BZ, CA, CH, CN, CO, CR, CU, CZ, DE, DK, DM, DZ, EC, EE, ES, FI, GB, GD, GE, GH, GM, HR, HU, ID, IL, IN, IS, JP, KE, KG, KP, KR, KZ, LC, LK, LR, LS, LT, LU, LV, MA, MD, MG, MK, MN, MW, MX, MZ, NO, NZ, OM, PH, PL, PT, RO, RU, SD, SE, SG, SI, SK, SL, TJ, TM, TN, TR, TT, TZ, UA, UG, UZ, VN, YU, ZA, ZM, ZW.

(84) Designated States *(regional)*: ARIPO patent (GH, GM, KE, LS, MW, MZ, SD, SL, SZ, TZ, UG, ZM, ZW),

*[Continued on next page]*

(54) Title: IR-EMITTER HEATING DEVICE AND METHOD FOR DEMOLDING LENSES

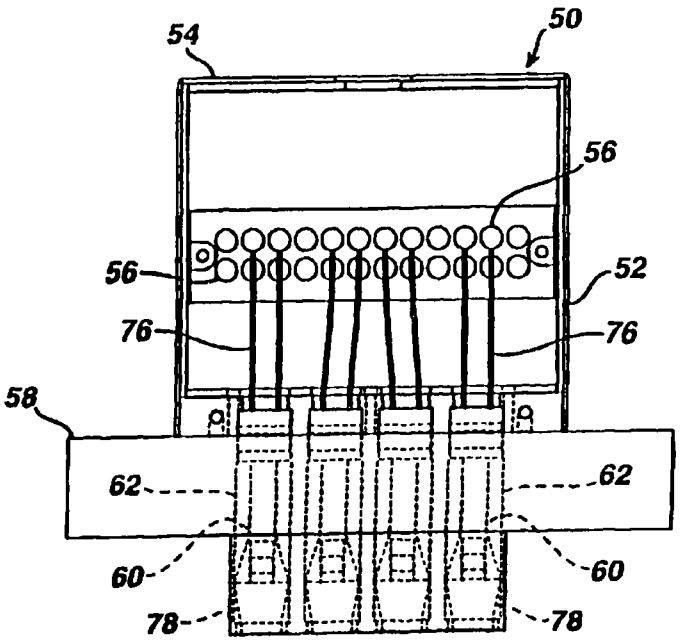


(57) Abstract: A method and a device for removing molded soft contact lenses, high-precision intraocular lenses and the like, from the individual molds (12 and 20) in which they are produced. Provided is an infra-red radiation or heater device (60) preferably constituted of silicon carbide IR-emitters, and which employs an individual infra-red emitter (60) for each individual mold (12 and 20), to impart a desired thermal gradient. Also provided are infra-red emitters having improved reflectors (78).

WO 02/081184 A1

*ACTION*

Eurasian patent (AM, AZ, BY, KG, KZ, MD, RU, TJ, TM), European patent (AT, BE, CH, CY, DE, DK, ES, FI, FR, GB, GR, IE, IT, LU, MC, NL, PT, SE, TR), OAPI patent (BF, BJ, CF, CG, CI, CM, GA, GN, GQ, GW, ML, MR, NE, SN, TD, TG).

**Published:**
— *with international search report*

*For two-letter codes and other abbreviations, refer to the "Guidance Notes on Codes and Abbreviations" appearing at the beginning of each regular issue of the PCT Gazette.*