FIG.1

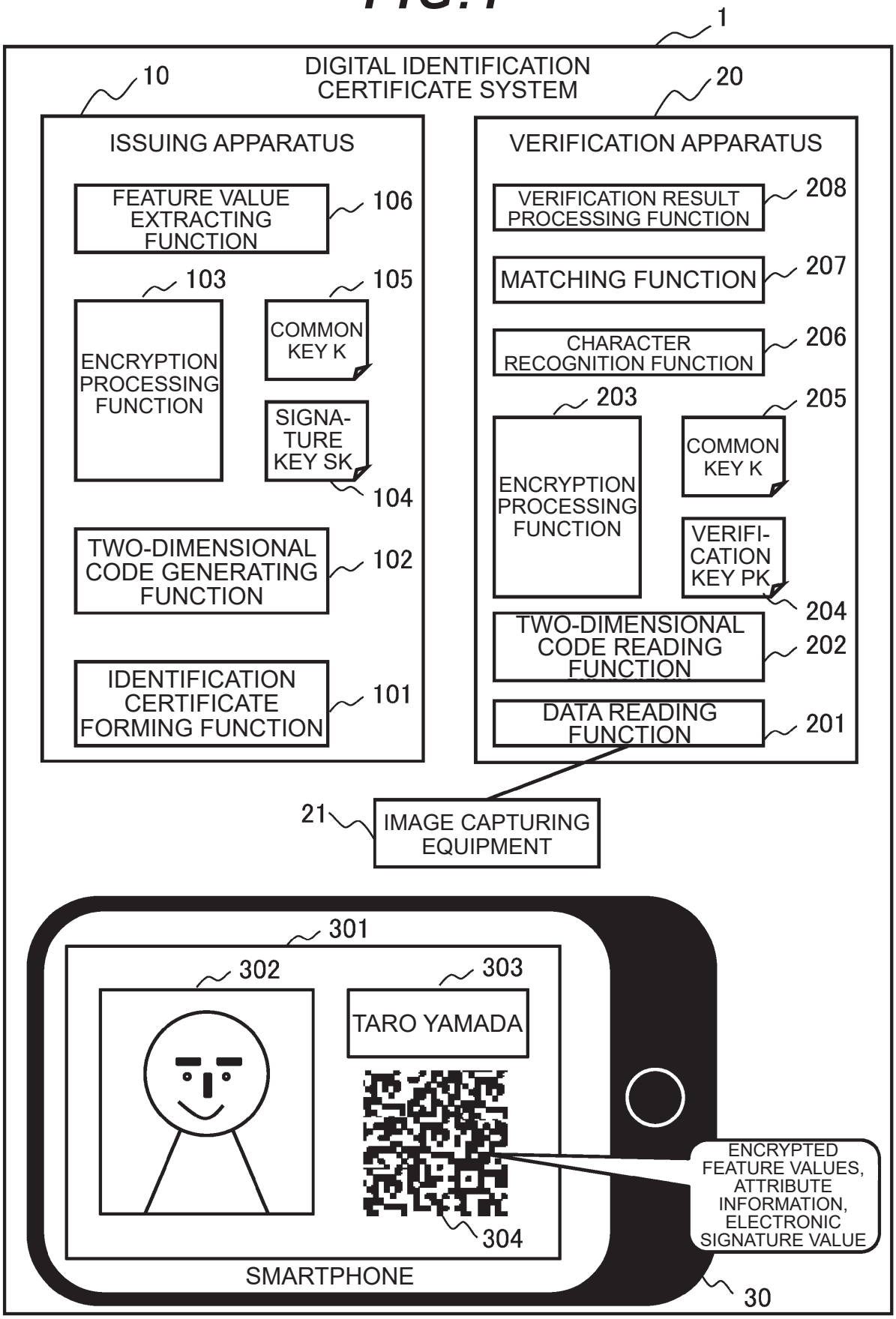
1
DIGITAL IDENTIFICATION CERTIFICATE SYSTEM
10
ISSUING APPARATUS
FEATURE VALUE EXTRACTING FUNCTION
106
103
ENCRYPTION PROCESSING FUNCTION
105
COMMON KEY K
SIGNA-TURE KEY SK
104
TWO-DIMENSIONAL CODE GENERATING FUNCTION
102
IDENTIFICATION CERTIFICATE FORMING FUNCTION
101
20
VERIFICATION APPARATUS
VERIFICATION RESULT PROCESSING FUNCTION
208
MATCHING FUNCTION
207
CHARACTER RECOGNITION FUNCTION
206
203
ENCRYPTION PROCESSING FUNCTION
205
COMMON KEY K
VERIFI-CATION KEY PK
204
TWO-DIMENSIONAL CODE READING FUNCTION
202
DATA READING FUNCTION
201
21
IMAGE CAPTURING EQUIPMENT
301
302
303
TARO YAMADA
304
ENCRYPTED FEATURE VALUES, ATTRIBUTE INFORMATION, ELECTRONIC SIGNATURE VALUE
SMARTPHONE
30

FIG.2

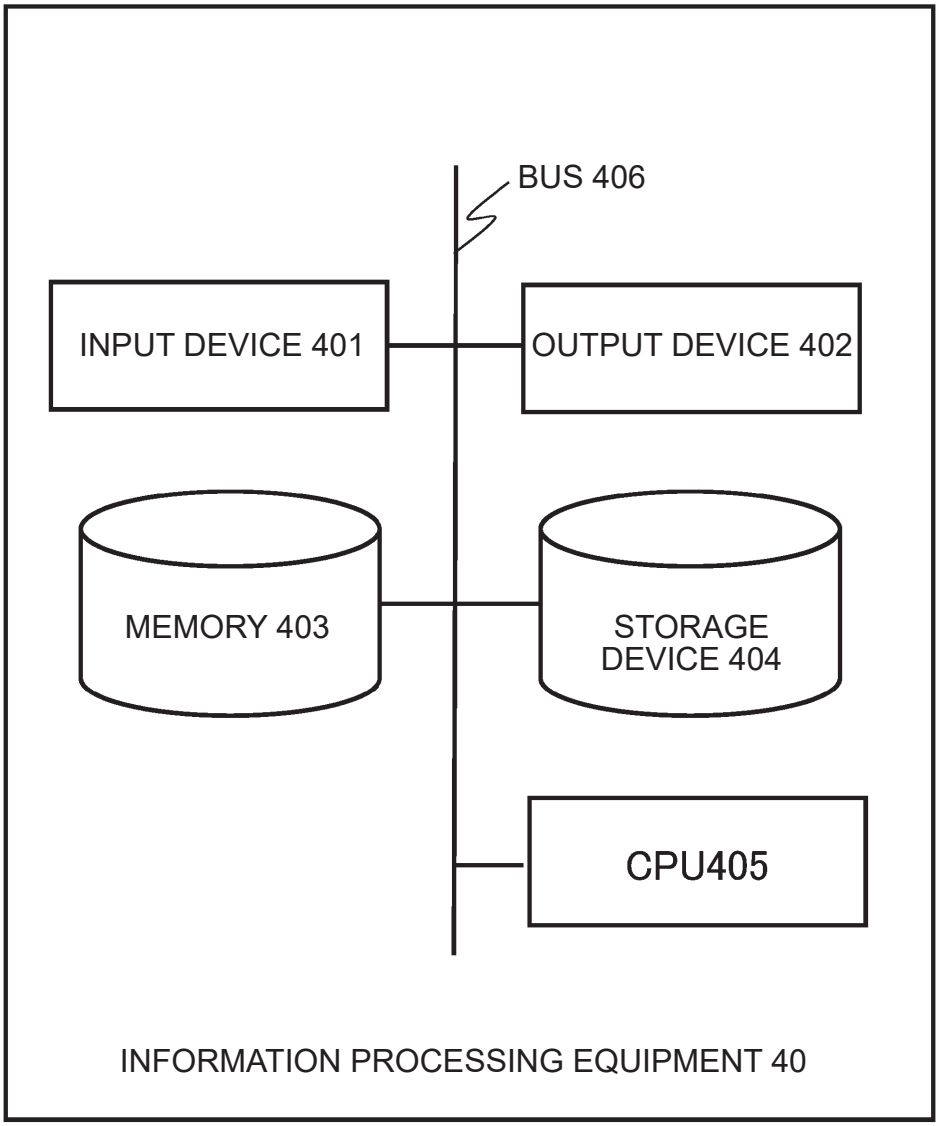
BUS 406
INPUT DEVICE 401
OUTPUT DEVICE 402
MEMORY 403
STORAGE DEVICE 404
CPU405
INFORMATION PROCESSING EQUIPMENT 40

FIG.3

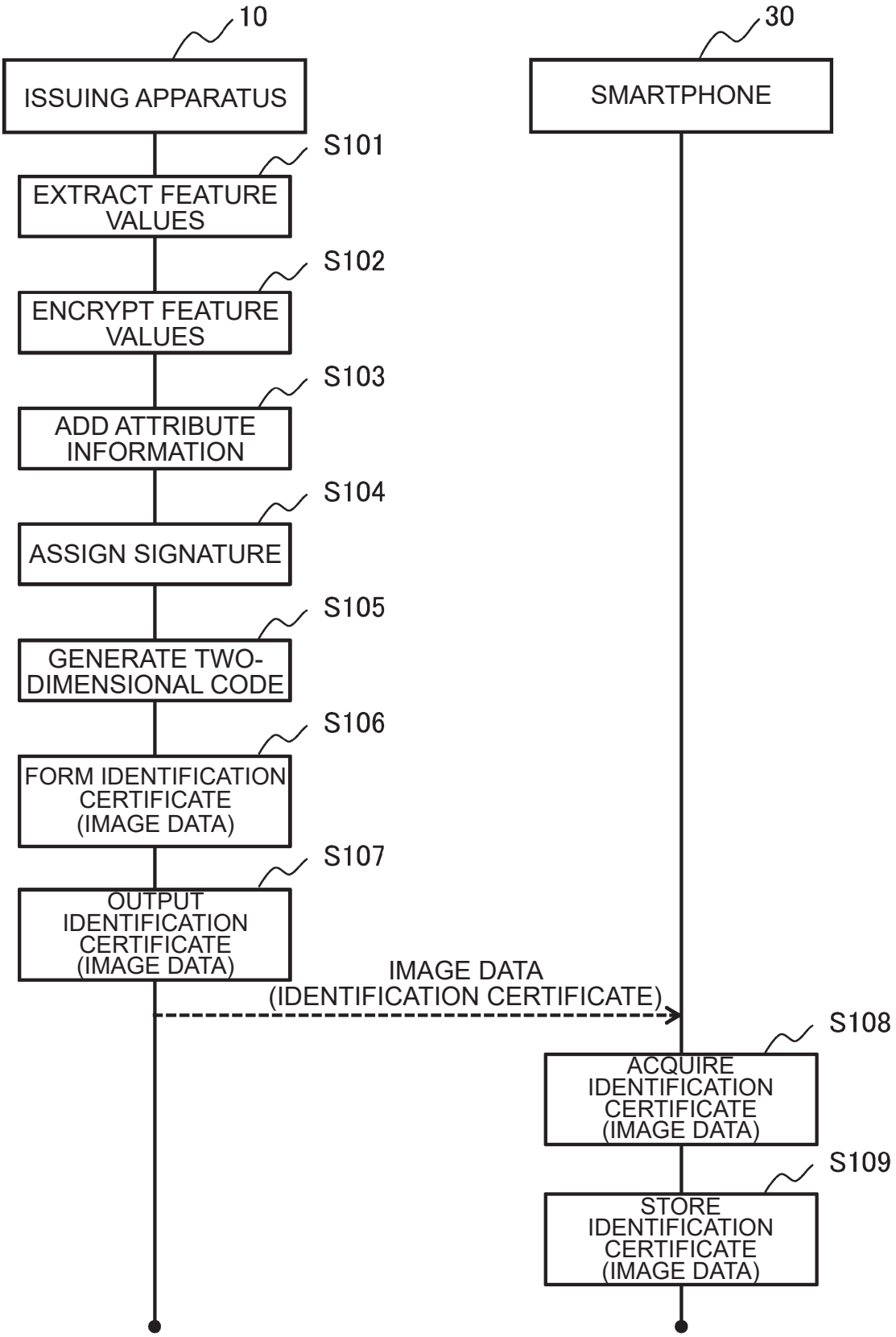
10
ISSUING APPARATUS
30
SMARTPHONE
S101
EXTRACT FEATURE VALUES
S102
ENCRYPT FEATURE VALUES
S103
ADD ATTRIBUTE INFORMATION
S104
ASSIGN SIGNATURE
S105
GENERATE TWO-DIMENSIONAL CODE
S106
FORM IDENTIFICATION CERTIFICATE (IMAGE DATA)
S107
OUTPUT IDENTIFICATION CERTIFICATE (IMAGE DATA)
IMAGE DATA (IDENTIFICATION CERTIFICATE)
S108
ACQUIRE IDENTIFICATION CERTIFICATE (IMAGE DATA)
S109
STORE IDENTIFICATION CERTIFICATE (IMAGE DATA)

FIG.4

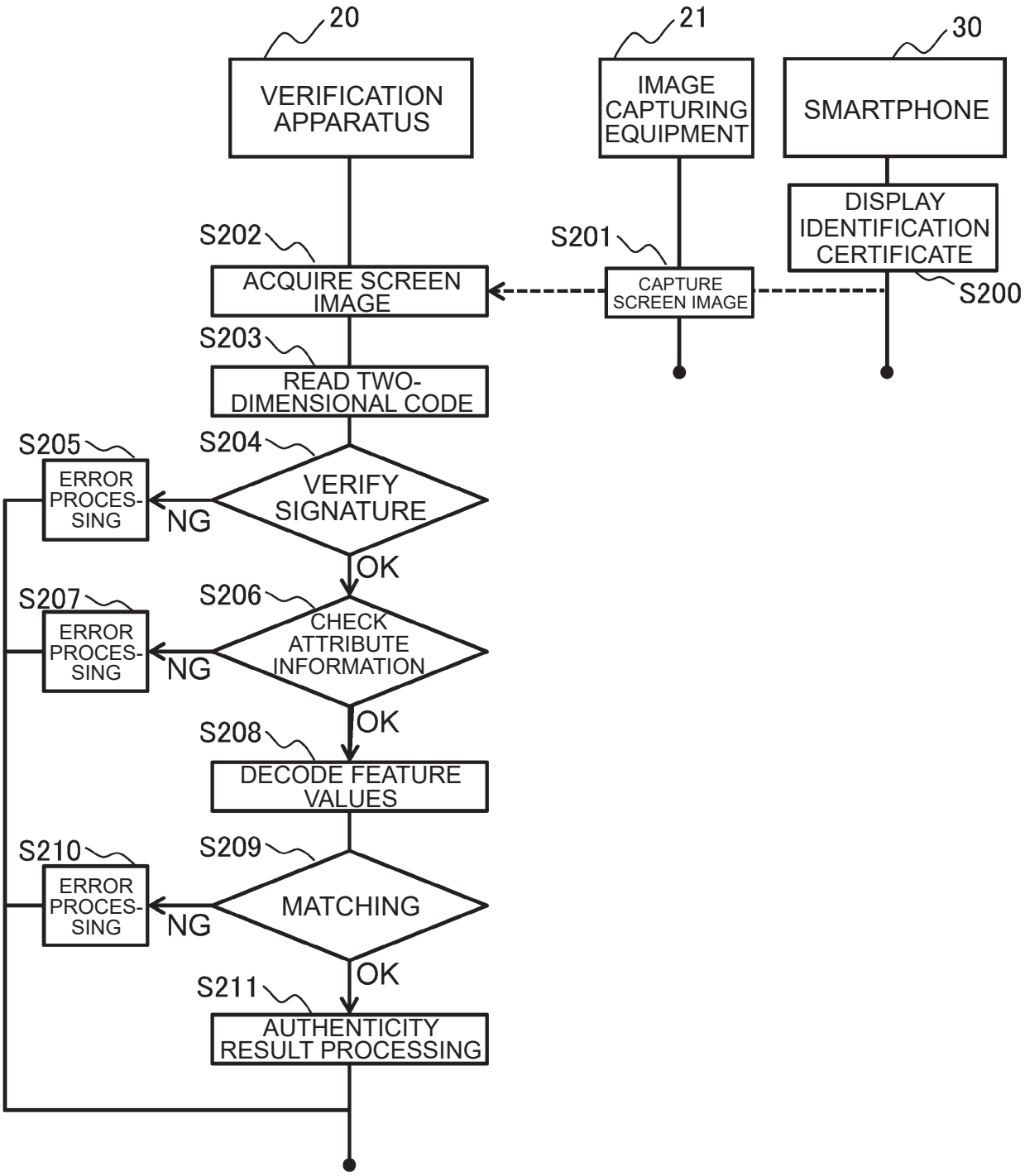
20
VERIFICATION APPARATUS
21
IMAGE CAPTURING EQUIPMENT
30
SMARTPHONE
DISPLAY IDENTIFICATION CERTIFICATE
S200
S201
CAPTURE SCREEN IMAGE
S202
ACQUIRE SCREEN IMAGE
S203
READ TWO-DIMENSIONAL CODE
S204
VERIFY SIGNATURE
NG
S205
ERROR PROCES-SING
OK
S206
CHECK ATTRIBUTE INFORMATION
NG
S207
ERROR PROCES-SING
OK
S208
DECODE FEATURE VALUES
S209
MATCHING
NG
S210
ERROR PROCES-SING
OK
S211
AUTHENTICITY RESULT PROCESSING

FIG.5

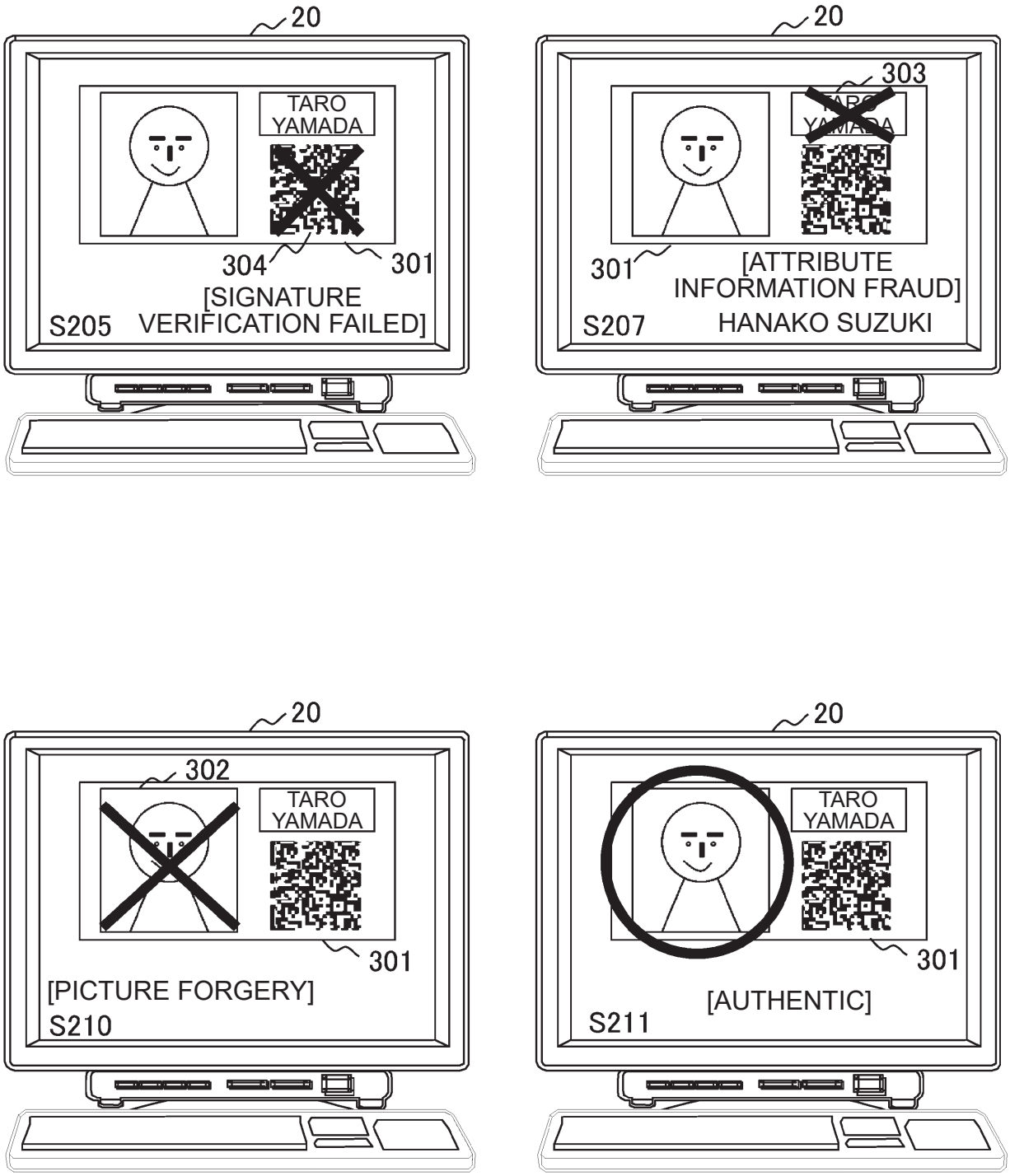
20
TARO
YAMADA
304
301
[SIGNATURE
VERIFICATION FAILED]
S205
20
303
301
[ATTRIBUTE
INFORMATION FRAUD]
S207
HANAKO SUZUKI
20
302
TARO
YAMADA
301
[PICTURE FORGERY]
S210
20
TARO
YAMADA
301
[AUTHENTIC]
S211

FIG.6

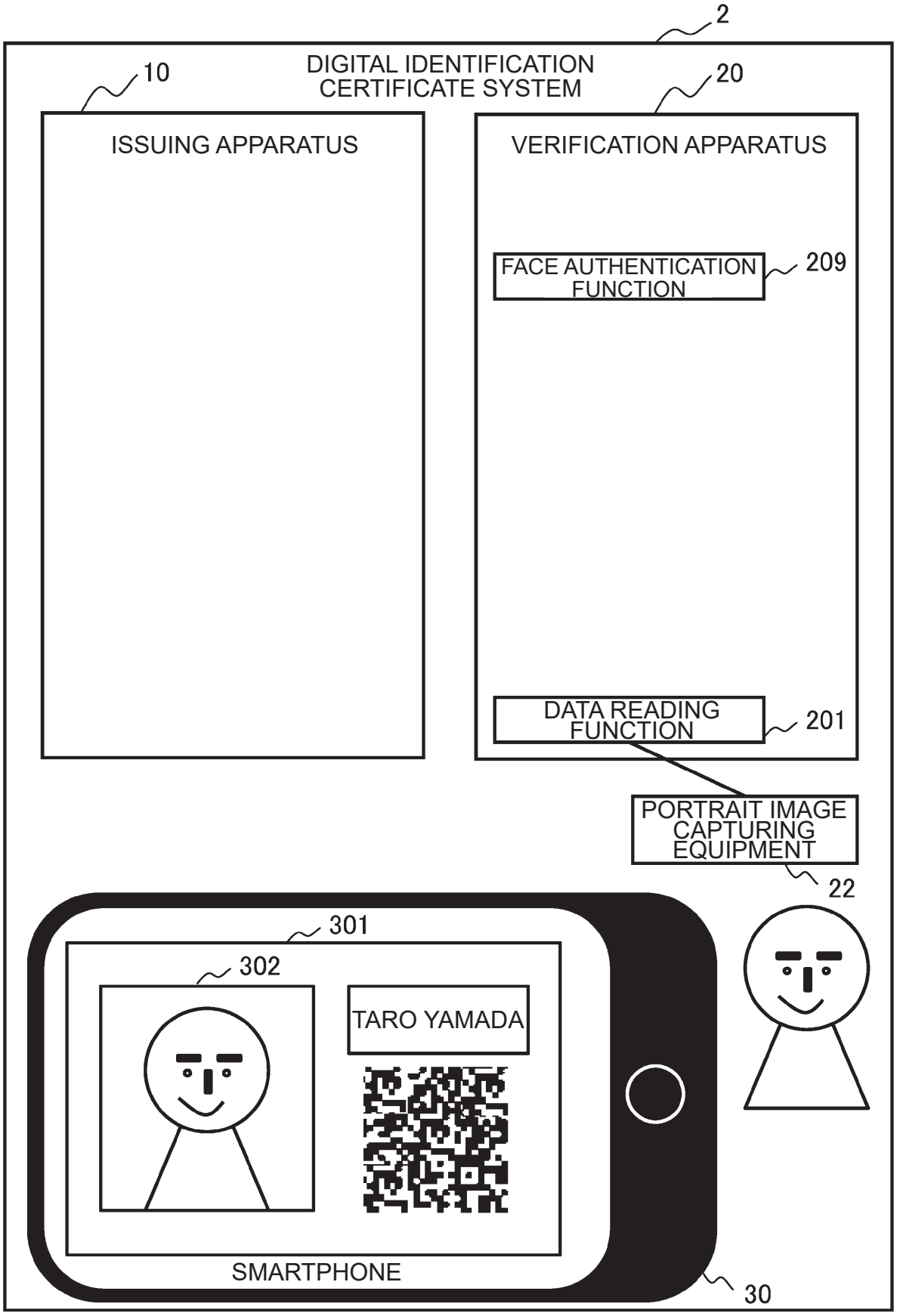
2
DIGITAL IDENTIFICATION CERTIFICATE SYSTEM
10
ISSUING APPARATUS
20
VERIFICATION APPARATUS
FACE AUTHENTICATION FUNCTION
209
DATA READING FUNCTION
201
PORTRAIT IMAGE CAPTURING EQUIPMENT
22
301
302
TARO YAMADA
SMARTPHONE
30

FIG.7

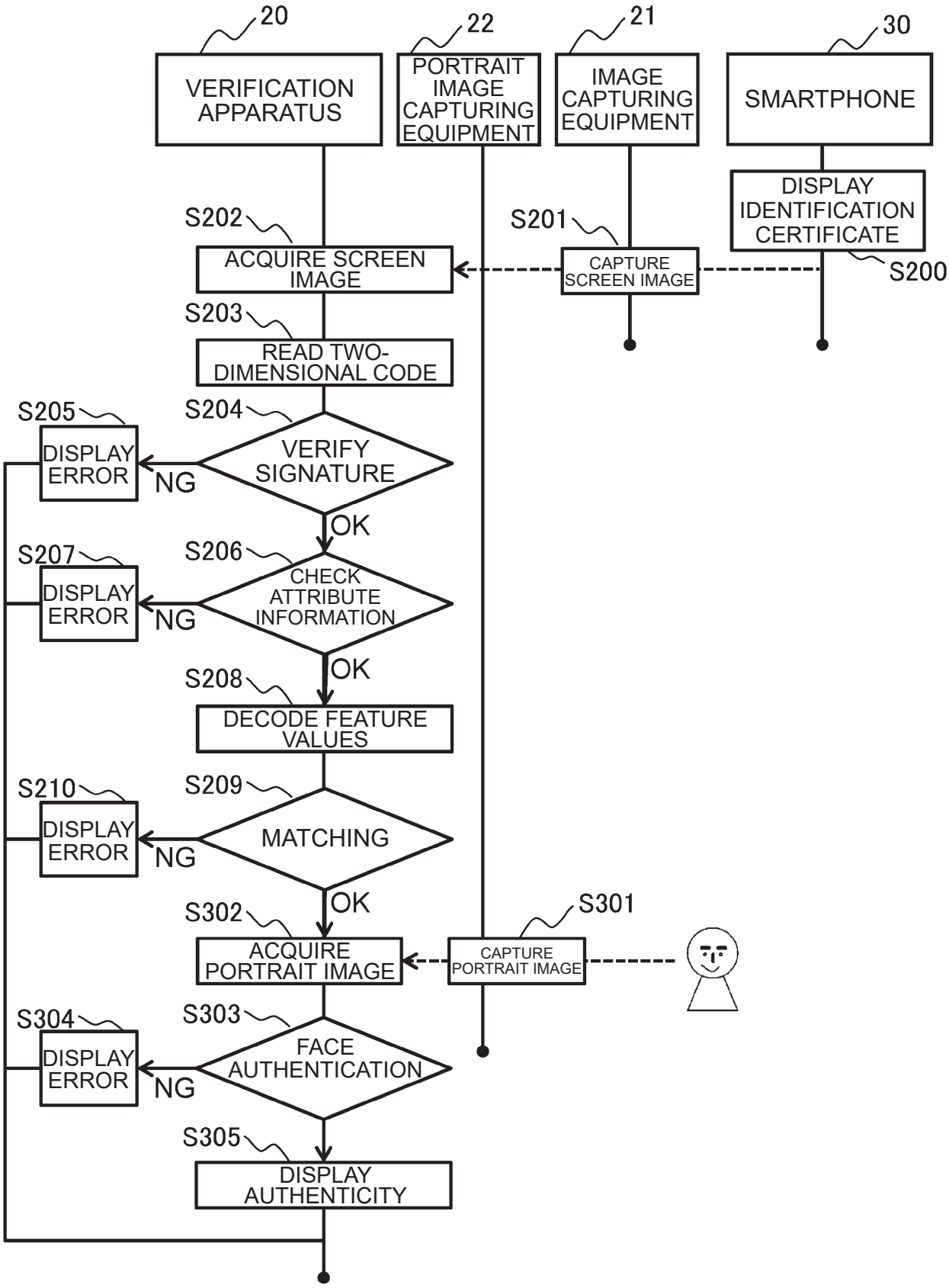
20
VERIFICATION APPARATUS
22
PORTRAIT IMAGE CAPTURING EQUIPMENT
21
IMAGE CAPTURING EQUIPMENT
30
SMARTPHONE
DISPLAY IDENTIFICATION CERTIFICATE
S200
S201
CAPTURE SCREEN IMAGE
S202
ACQUIRE SCREEN IMAGE
S203
READ TWO-DIMENSIONAL CODE
S204
VERIFY SIGNATURE
NG
S205
DISPLAY ERROR
OK
S206
CHECK ATTRIBUTE INFORMATION
NG
S207
DISPLAY ERROR
OK
S208
DECODE FEATURE VALUES
S209
MATCHING
NG
S210
DISPLAY ERROR
OK
S301
CAPTURE PORTRAIT IMAGE
S302
ACQUIRE PORTRAIT IMAGE
S303
FACE AUTHENTICATION
NG
S304
DISPLAY ERROR
S305
DISPLAY AUTHENTICITY

FIG.8

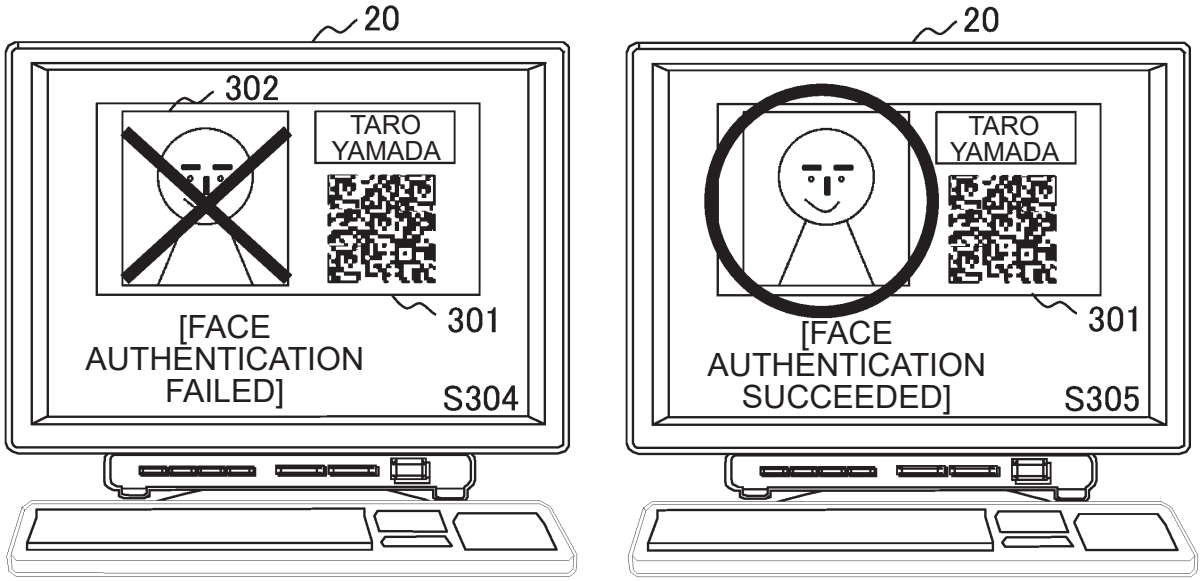
20
302
TARO
YAMADA
301
[FACE
AUTHENTICATION
FAILED]
S304
20
TARO
YAMADA
301
[FACE
AUTHENTICATION
SUCCEEDED]
S305