
Audio processing system 100
Audio encoding apparatus 101
Bitstream
Audio decoding apparatus 102

FIG. 1

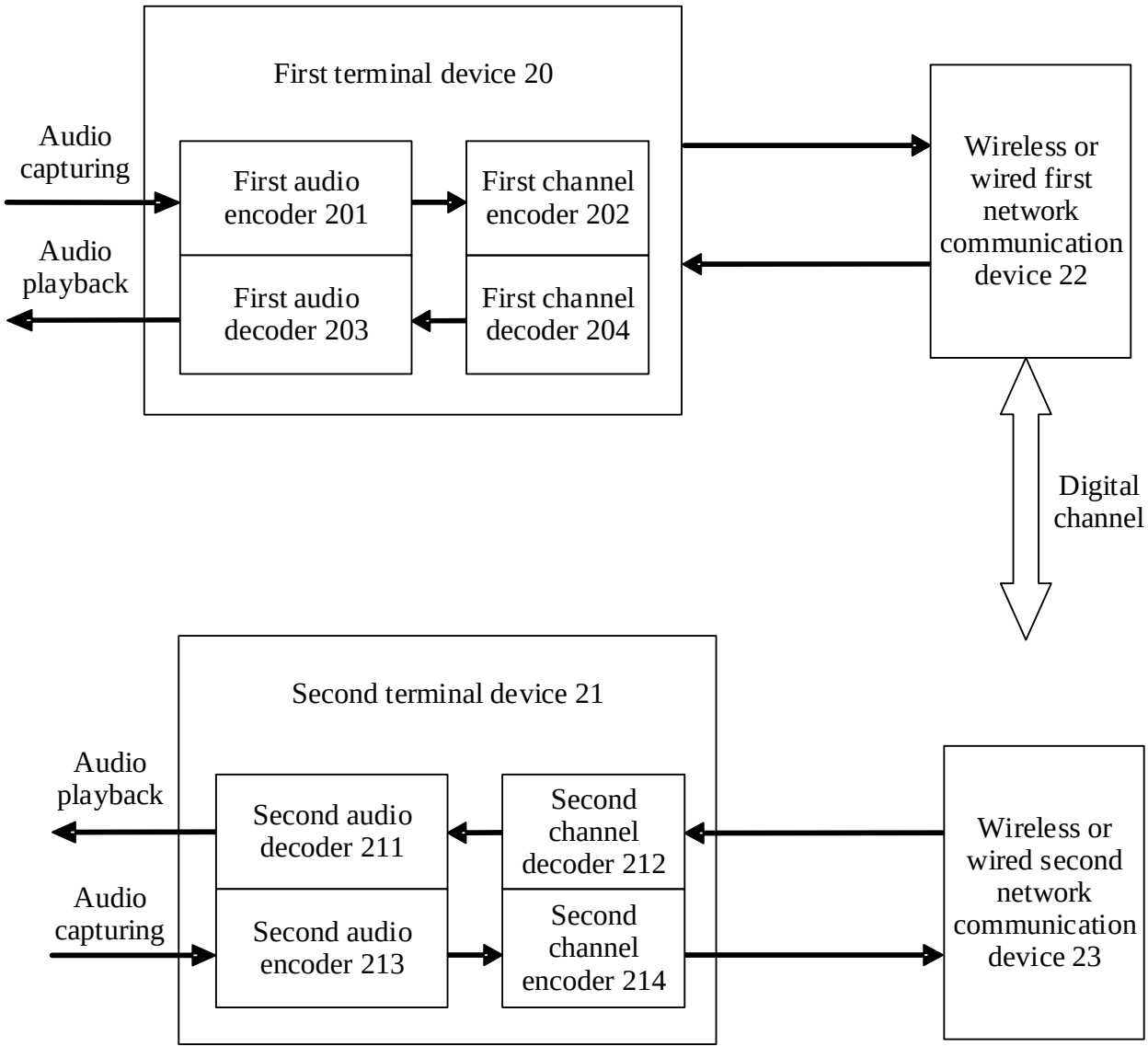
First terminal device 20
Audio capturing
Audio playback
First audio encoder 201
First channel encoder 202
First audio decoder 203
First channel decoder 204
Wireless or wired first network communication device 22
Digital channel
Second terminal device 21
Audio playback
Audio capturing
Second audio decoder 211
Second channel decoder 212
Second audio encoder 213
Second channel encoder 214
Wireless or wired second network communication device 23

FIG. 2a

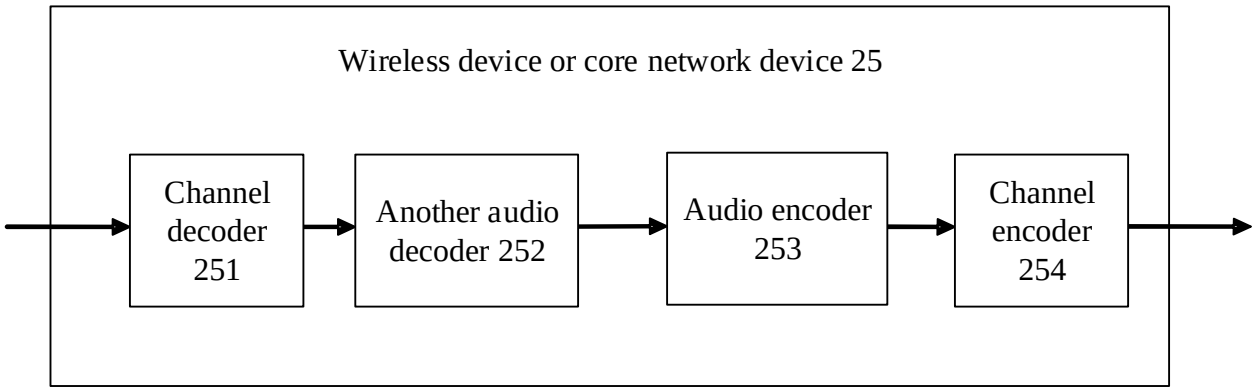
Wireless device or core network device 25
Channel decoder 251
Another audio decoder 252
Audio encoder 253
Channel encoder 254

FIG. 2b

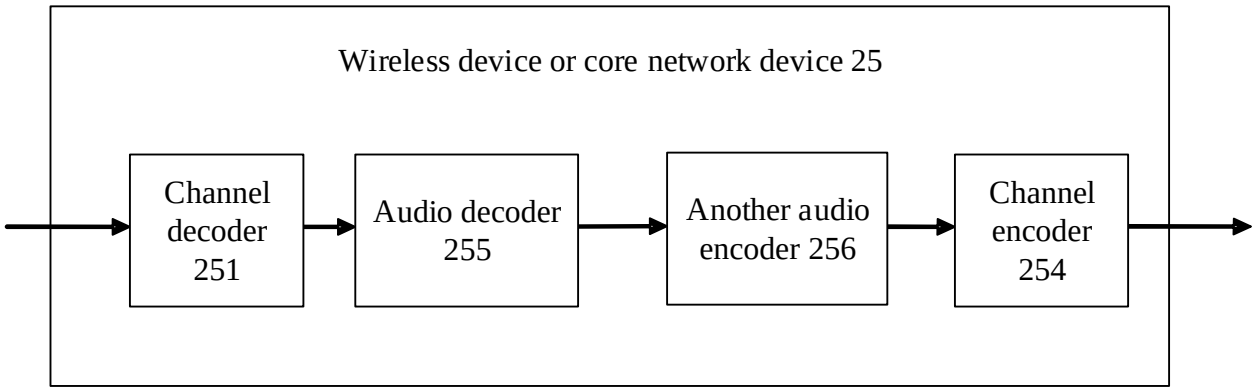
Wireless device or core network device 25
Channel decoder 251
Audio decoder 255
Another audio encoder 256
Channel encoder 254

FIG. 2c

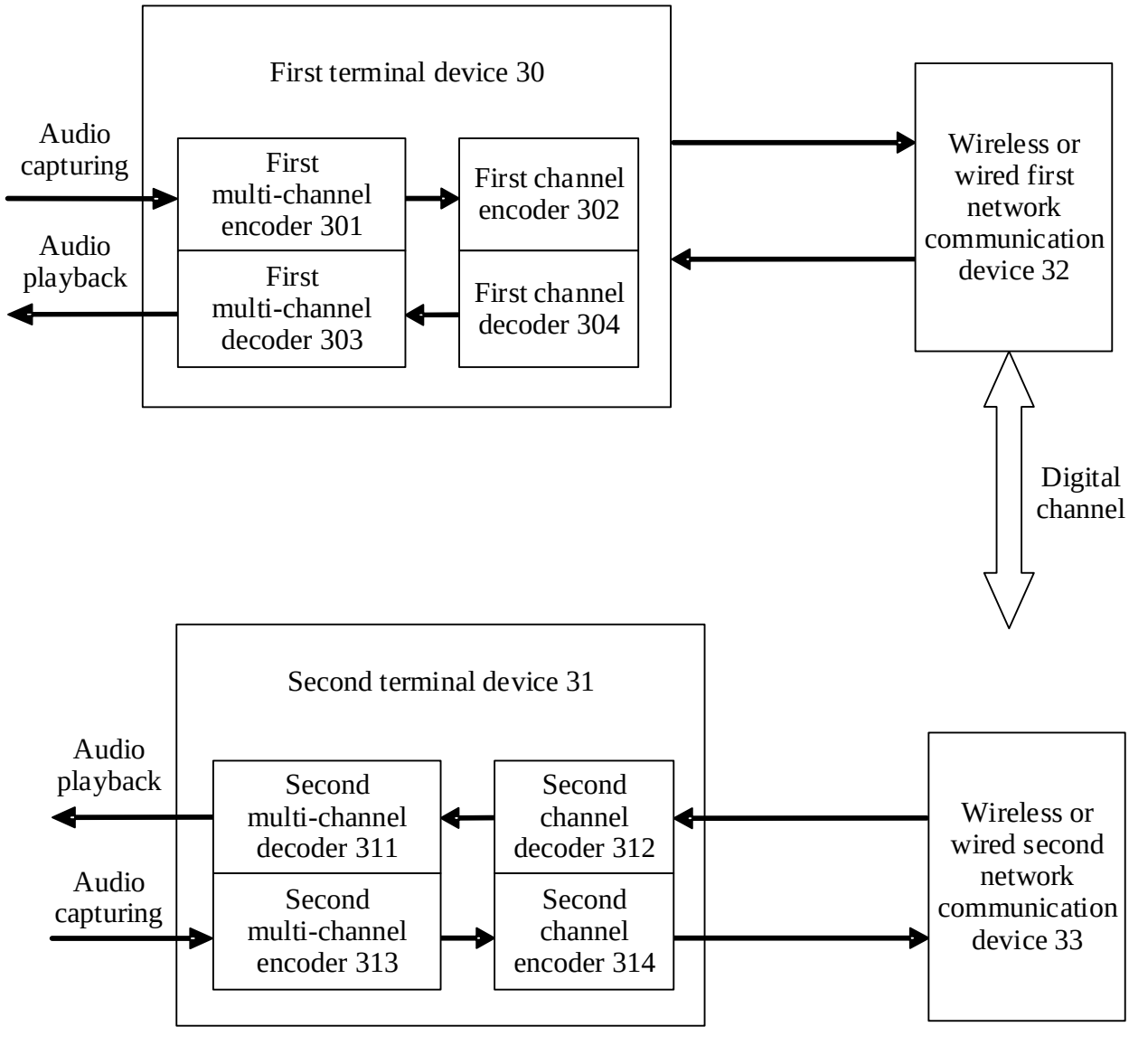
First terminal device 30
Audio capturing
Audio playback
First multi-channel encoder 301
First channel encoder 302
First multi-channel decoder 303
First channel decoder 304
Wireless or wired first network communication device 32
Digital channel
Second terminal device 31
Audio playback
Audio capturing
Second multi-channel decoder 311
Second channel decoder 312
Second multi-channel encoder 313
Second channel encoder 314
Wireless or wired second network communication device 33

FIG. 3a

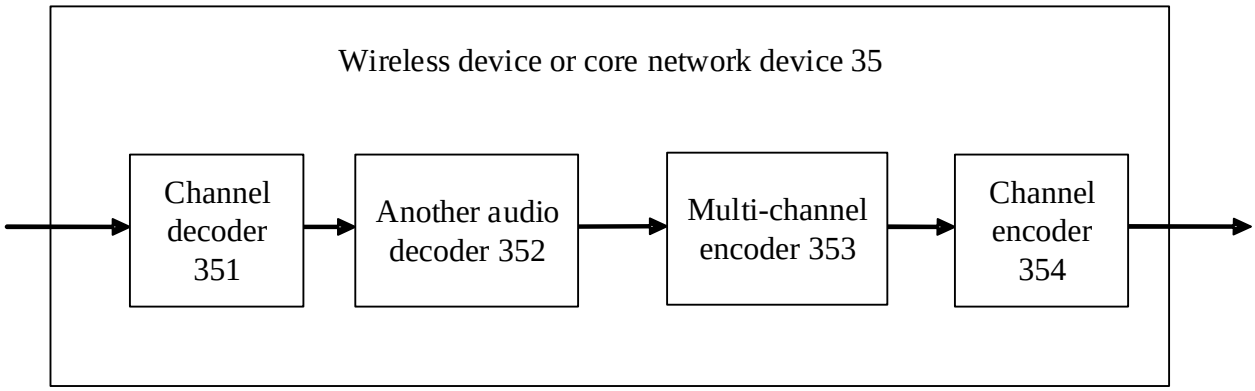
Wireless device or core network device 35
Channel decoder 351
Another audio decoder 352
Multi-channel encoder 353
Channel encoder 354

FIG. 3b

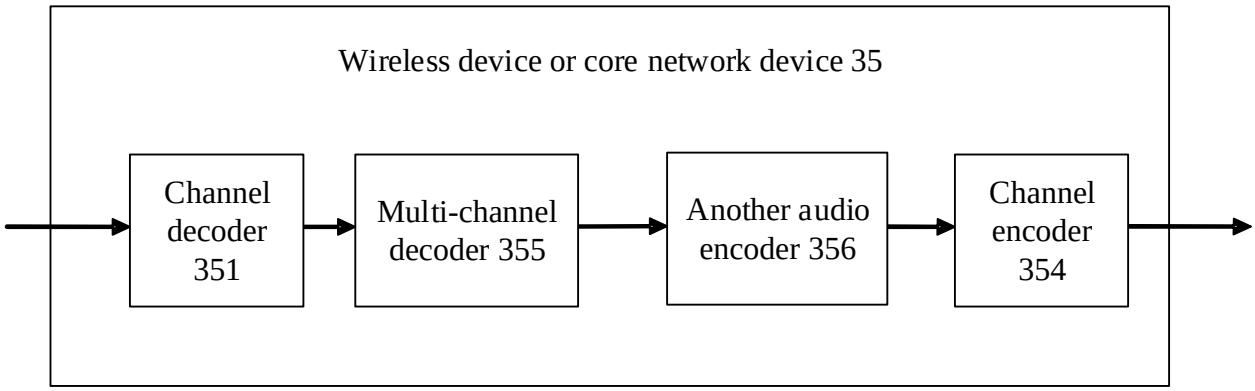
Wireless device or core network device 35
Channel decoder 351
Multi-channel decoder 355
Another audio encoder 356
Channel encoder 354

FIG. 3c

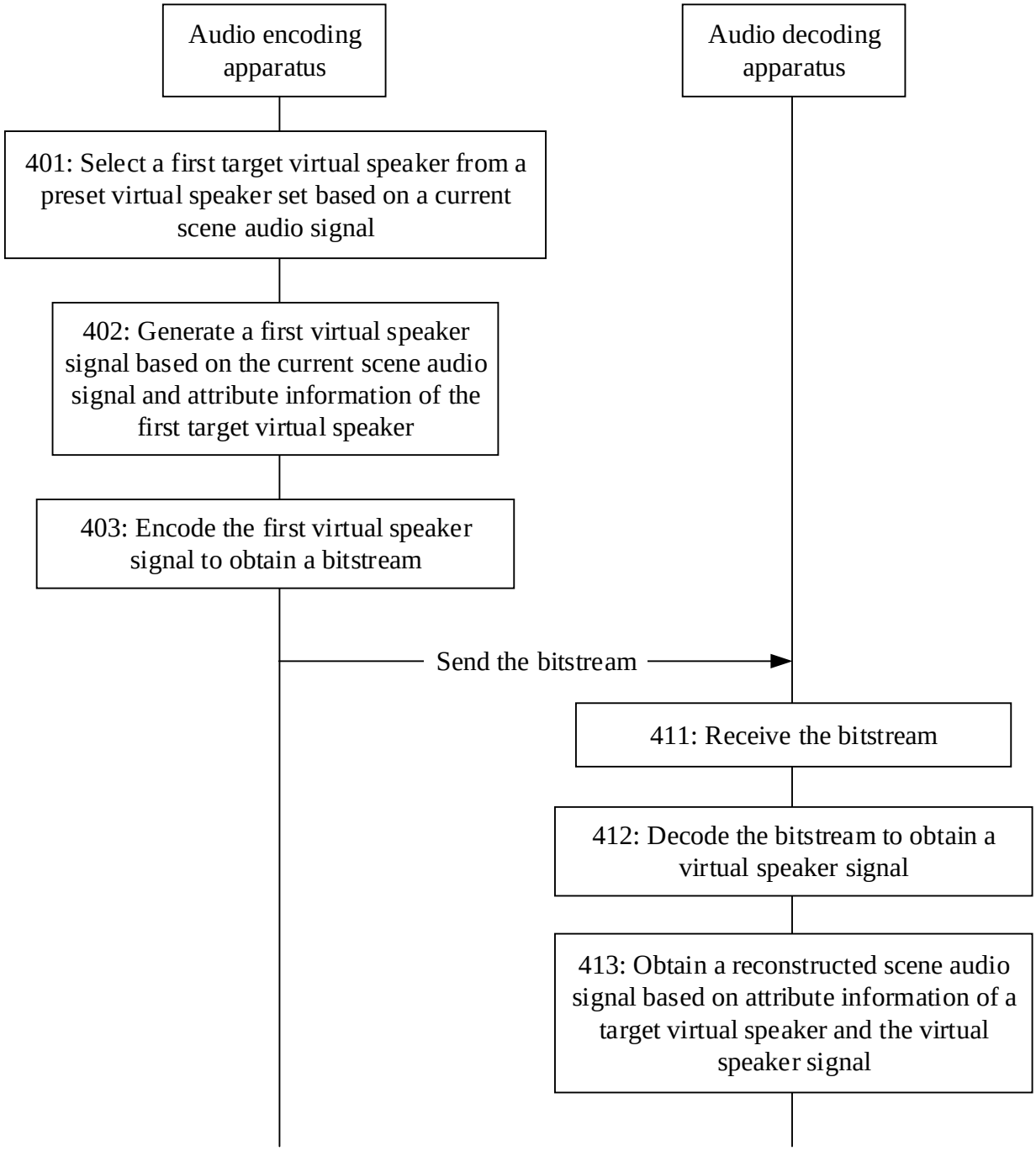
Audio encoding apparatus
Audio decoding apparatus
401: Select a first target virtual speaker from a preset virtual speaker set based on a current scene audio signal
402: Generate a first virtual speaker signal based on the current scene audio signal and attribute information of the first target virtual speaker
403: Encode the first virtual speaker signal to obtain a bitstream
Send the bitstream
411: Receive the bitstream
412: Decode the bitstream to obtain a virtual speaker signal
413: Obtain a reconstructed scene audio signal based on attribute information of a target virtual speaker and the virtual speaker signal

FIG. 4

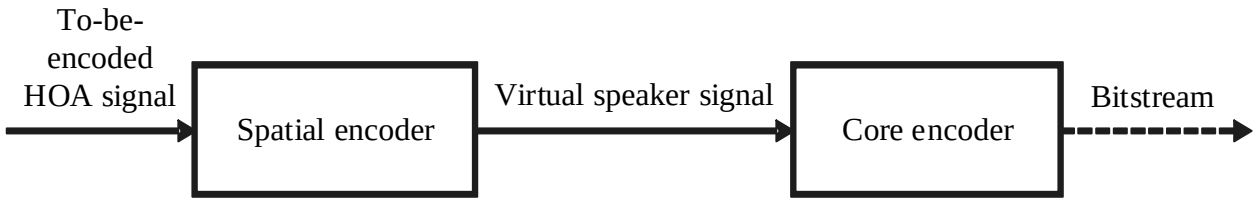

FIG. 5

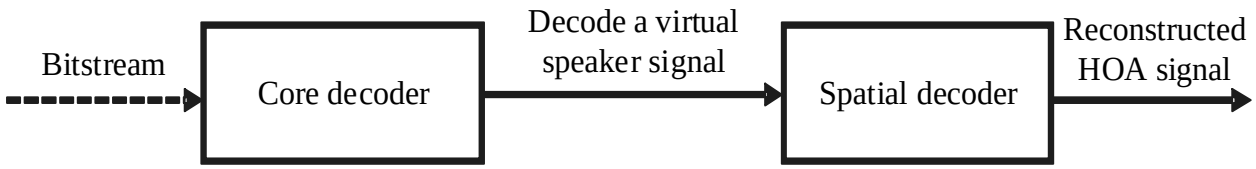

FIG. 6

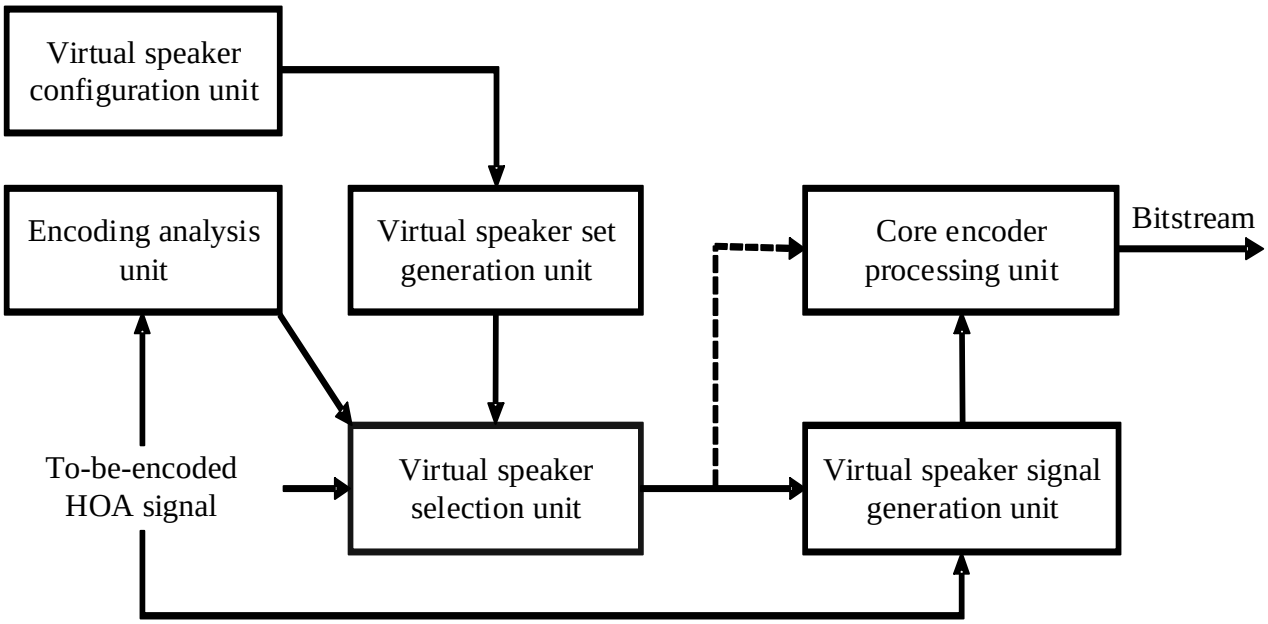

FIG. 7

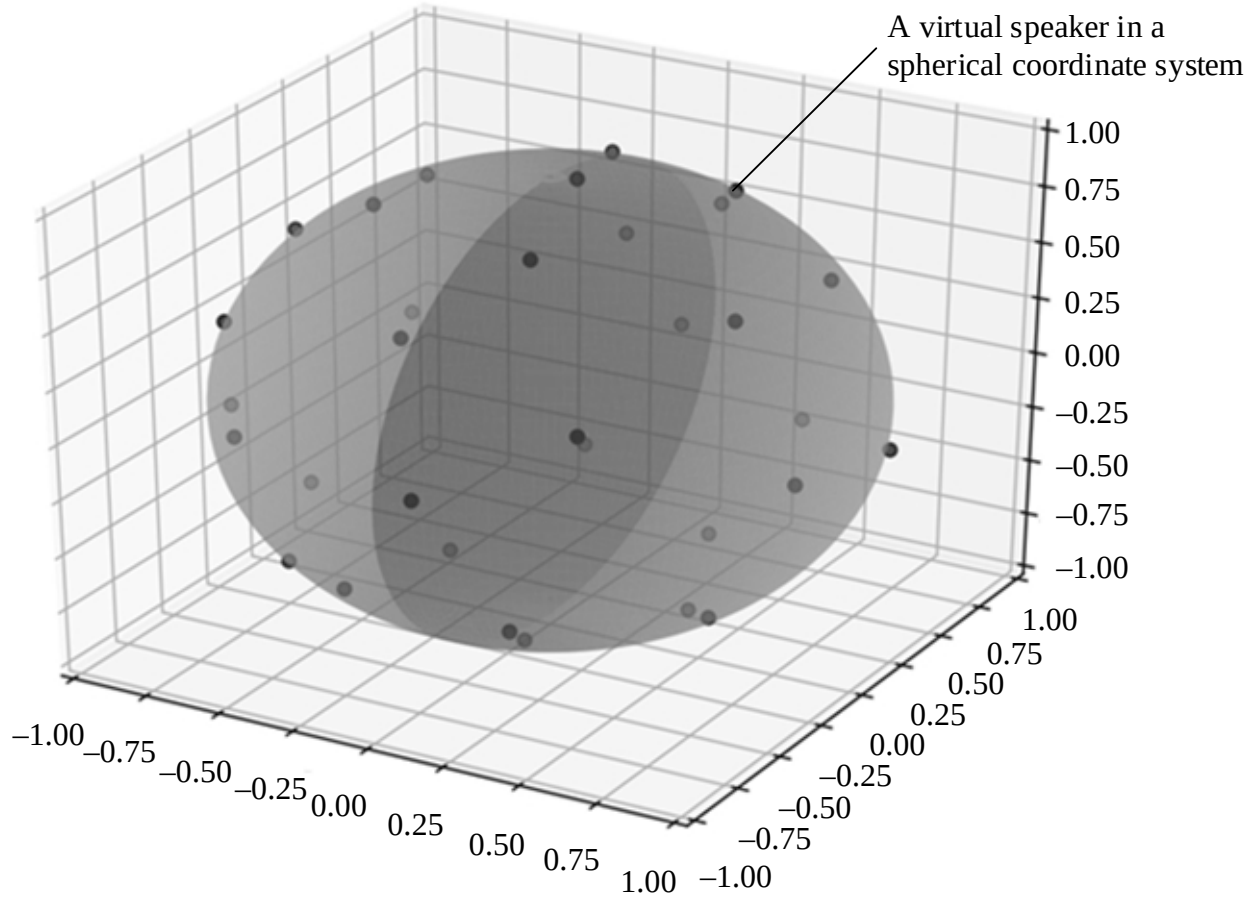
A virtual speaker in a spherical coordinate system
1.00
0.75
0.50
0.25
0.00
–0.25
–0.50
–0.75
–1.00
–1.00
–0.75
–0.50
–0.25
0.00
0.25
0.50
0.75
1.00

FIG. 8

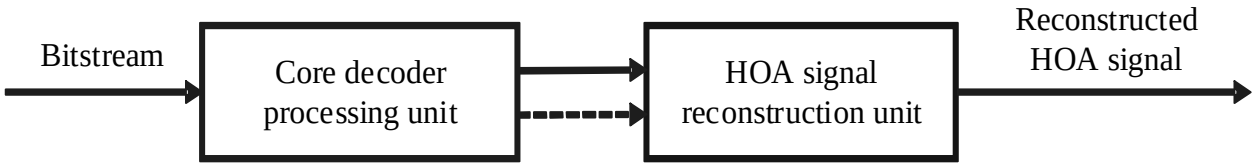
Bitstream
Core decoder processing unit
HOA signal reconstruction unit
Reconstructed HOA signal

FIG. 9

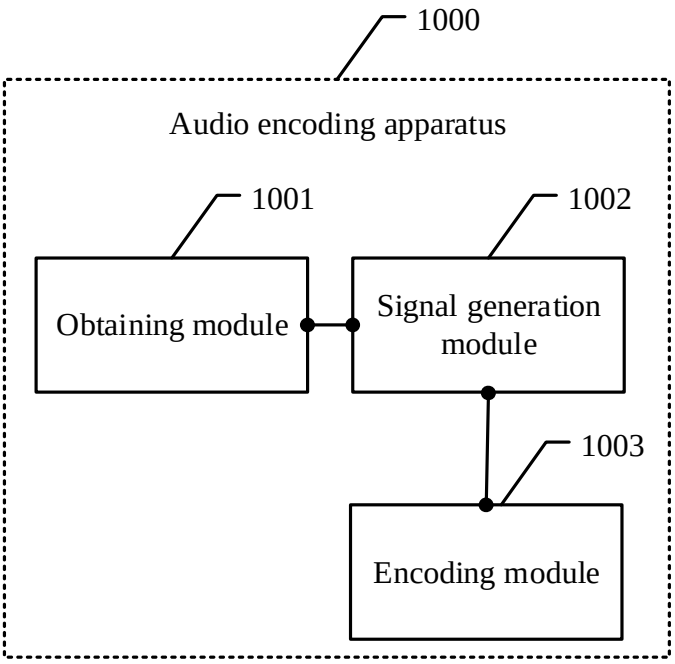
1000
Audio encoding apparatus
1001
1002
Obtaining module
Signal generation module
1003
Encoding module

FIG. 10

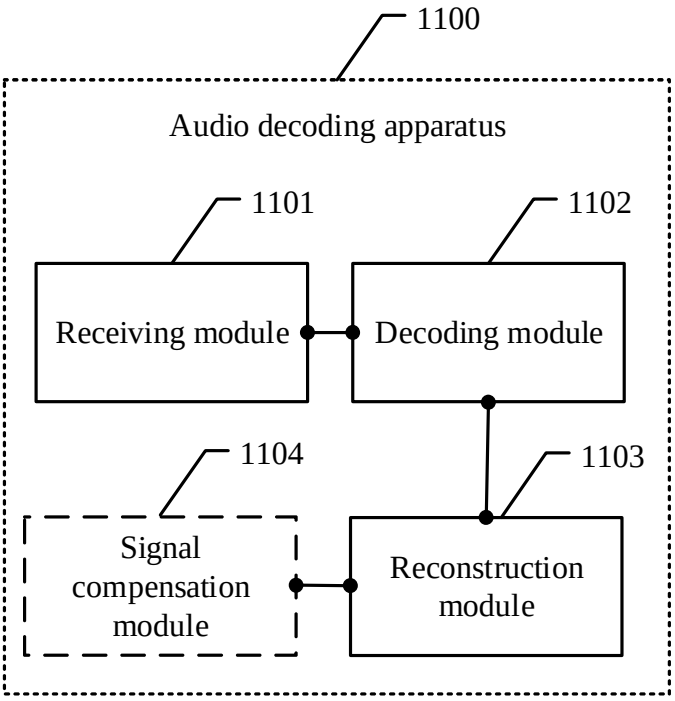
1100
Audio decoding apparatus
1101
1102
Receiving module
Decoding module
1104
1103
Signal compensation module
Reconstruction module

FIG. 11

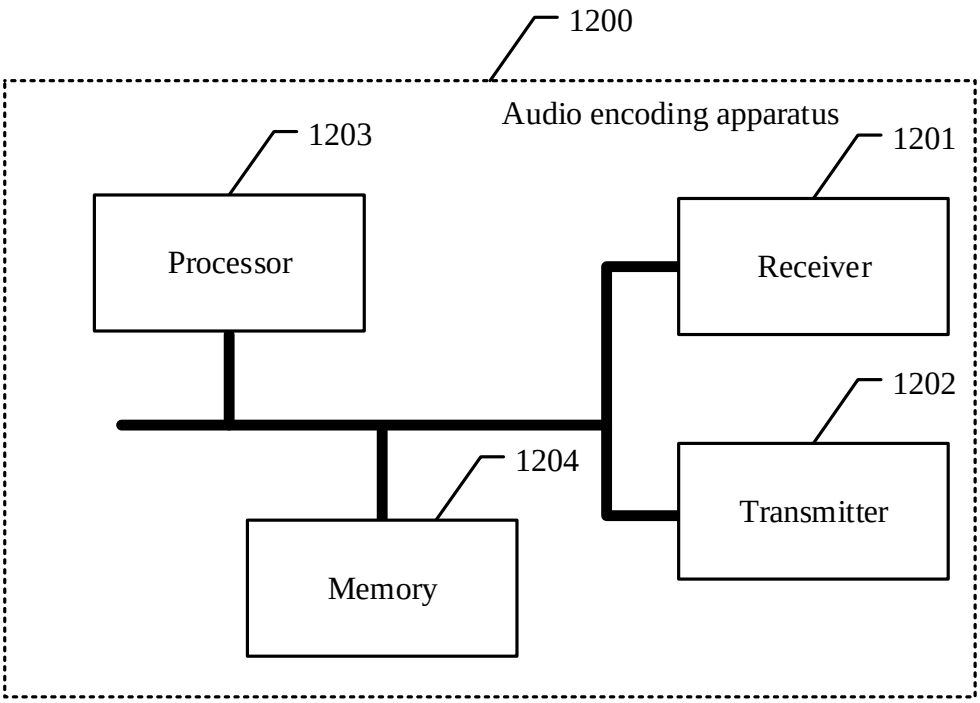
1200
Audio encoding apparatus
1203
1201
Processor
Receiver
1202
1204
Transmitter
Memory

FIG. 12

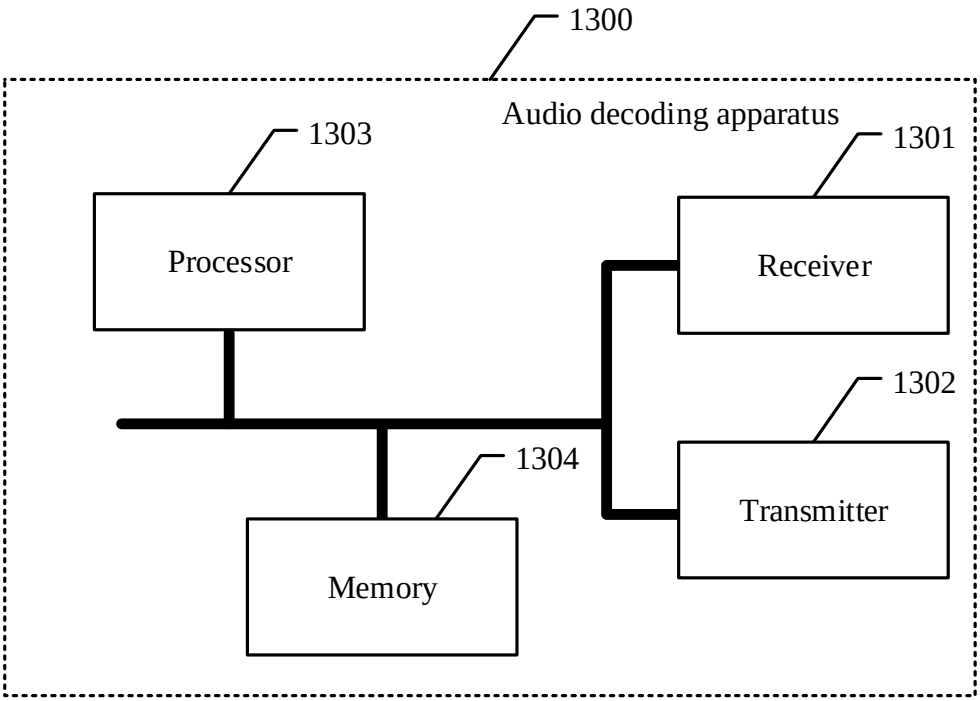
1300
Audio decoding apparatus
1303
1301
Processor
Receiver
1302
1304
Transmitter
Memory

FIG. 13