(12) INTERNATIONAL APPLICATION PUBLISHED UNDER THE PATENT COOPERATION TREATY (PCT)

(19) World Intellectual Property Organization
International Bureau

(43) International Publication Date
10 March 2011 (10.03.2011)

PCT

(10) International Publication Number
WO 2011/028811 A2

(51) International Patent Classification:

A61K 51/00 (2006.01)	*C12P 21/00* (2006.01)
C07K 16/00 (2006.01)	*A61K 39/395* (2006.01)
C12N 9/96 (2006.01)	*A61P 19/02* (2006.01)
C07H 21/04 (2006.01)	*A61P 35/00* (2006.01)
C12N 15/63 (2006.01)	*A61P 25/28* (2006.01)
C12N 1/21 (2006.01)	*A61P 9/10* (2006.01)
C12N 5/10 (2006.01)	*A61P 31/12* (2006.01)
C12N 1/11 (2006.01)	*A61P 5/50* (2006.01)
C12N 1/15 (2006.01)	*A61P 37/06* (2006.01)
C12N 1/19 (2006.01)	*A61P 17/06* (2006.01)

(21) International Application Number:
PCT/US2010/047543

(22) International Filing Date:
1 September 2010 (01.09.2010)

(25) Filing Language: English

(26) Publication Language: English

(30) Priority Data:
61/238,908 1 September 2009 (01.09.2009) US
61/251,946 15 October 2009 (15.10.2009) US

(71) Applicant *(for all designated States except US)*: **ABBOTT LABORATORIES** [US/US]; 100 Abbott Park Road, Abbott Park, Illinois 60064 (US).

(72) Inventors; and

(75) Inventors/Applicants *(for US only)*: **GHAYUR, Tariq** [US/US]; 1014 Washington Street, Holliston, Massachusetts 01746 (US). **LIU, Junjian** [CN/US]; 14 Crimson Drive, Shrewsbury, Massachusetts 01545 (US). **MANOJ, Sharmila** [IN/US]; 1625 Fox Run Drive, Ar-

[Continued on next page]

(54) Title: DUAL VARIABLE DOMAIN IMMUNOGLOBULINS AND USES THEREOF

(57) Abstract: The present invention relates to engineered multivalent and multispecific binding proteins, methods of making, and specifically to their uses in the prevention, diagnosis, and/or treatment of disease.

Figure 1

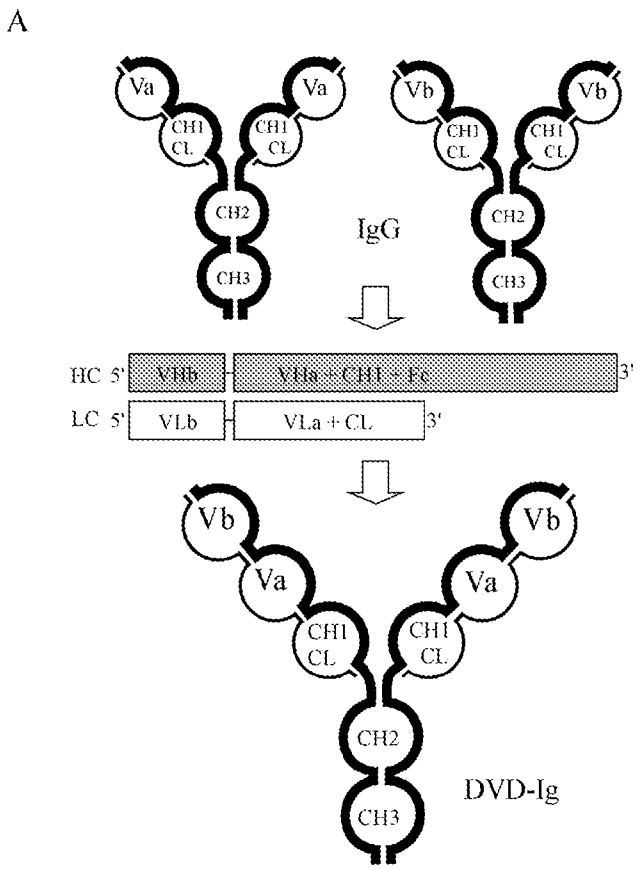

WO 2011/028811 A2

lington Heights, Illinois 60004 (US). **BROPHY, Susan E.** [US/US]; 2477 Mallard Drive, Lindenhurst, Illinois 60046 (US).

(74) **Agents**: **STEEL, Diana M.** et al.; Abbott Bioresearch Center, 100 Research Drive, Worcester, Massachusetts 01605 (US).

(81) **Designated States** *(unless otherwise indicated, for every kind of national protection available)*: AE, AG, AL, AM, AO, AT, AU, AZ, BA, BB, BG, BH, BR, BW, BY, BZ, CA, CH, CL, CN, CO, CR, CU, CZ, DE, DK, DM, DO, DZ, EC, EE, EG, ES, FI, GB, GD, GE, GH, GM, GT, HN, HR, HU, ID, IL, IN, IS, JP, KE, KG, KM, KN, KP, KR, KZ, LA, LC, LK, LR, LS, LT, LU, LY, MA, MD, ME, MG, MK, MN, MW, MX, MY, MZ, NA, NG, NI, NO, NZ, OM, PE, PG, PH, PL, PT, RO, RS, RU, SC, SD, SE, SG, SK, SL, SM, ST, SV, SY, TH, TJ, TM, TN, TR, TT, TZ, UA, UG, US, UZ, VC, VN, ZA, ZM, ZW.

(84) **Designated States** *(unless otherwise indicated, for every kind of regional protection available)*: ARIPO (BW, GH, GM, KE, LR, LS, MW, MZ, NA, SD, SL, SZ, TZ, UG, ZM, ZW), Eurasian (AM, AZ, BY, KG, KZ, MD, RU, TJ, TM), European (AL, AT, BE, BG, CH, CY, CZ, DE, DK, EE, ES, FI, FR, GB, GR, HR, HU, IE, IS, IT, LT, LU, LV, MC, MK, MT, NL, NO, PL, PT, RO, SE, SI, SK, SM, TR), OAPI (BF, BJ, CF, CG, CI, CM, GA, GN, GQ, GW, ML, MR, NE, SN, TD, TG).

Published:

— *without international search report and to be republished upon receipt of that report (Rule 48.2(g))*