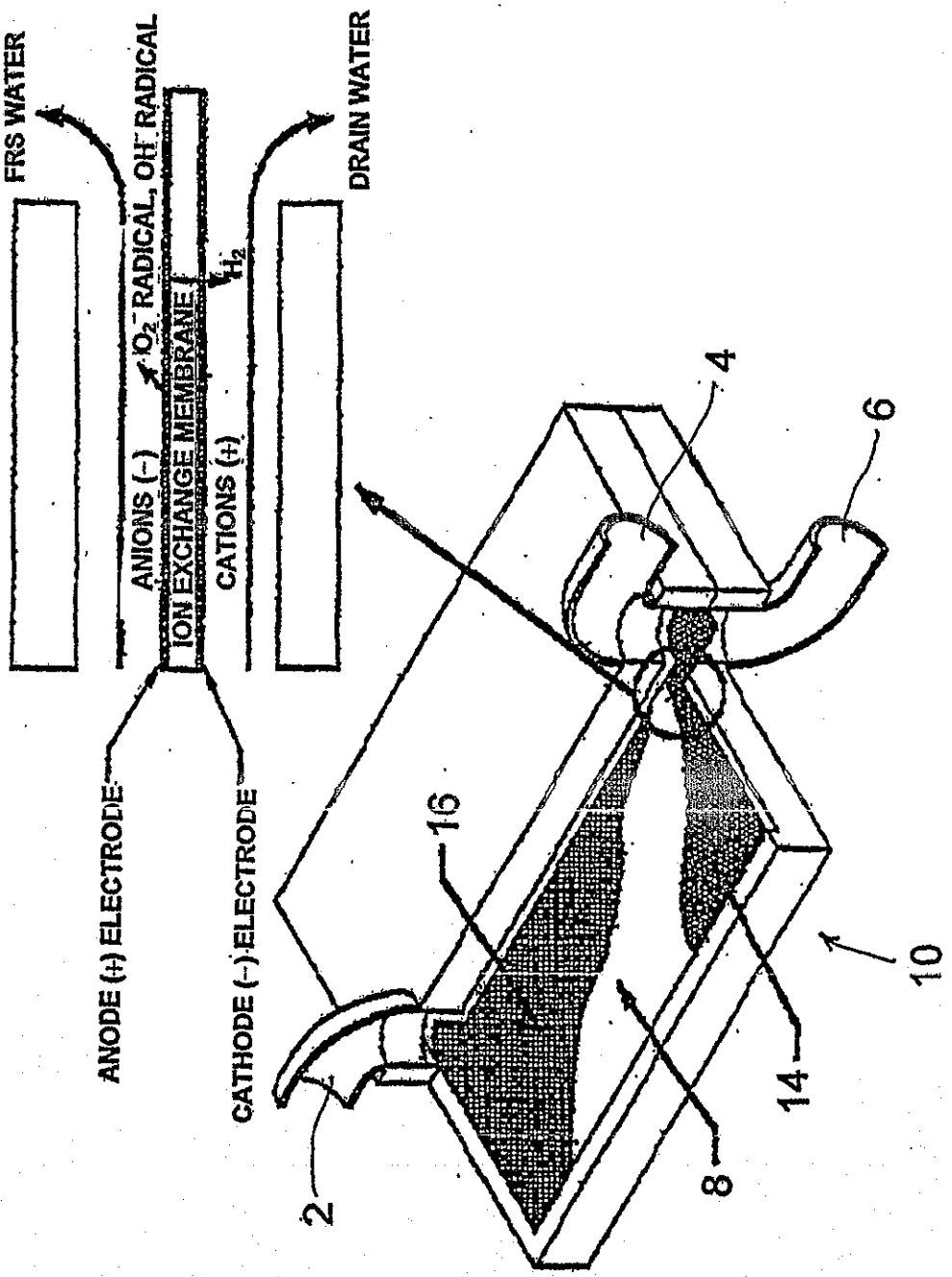
FRS WATER
O_2^- RADICAL, OH^- RADICAL
ANIONS (-)
ION EXCHANGE MEMBRANE
CATIONS (+)
H_2
DRAIN WATER
ANODE (+) ELECTRODE
CATHODE (-) ELECTRODE
4
6
16
10
14
8
2

FIG. 1

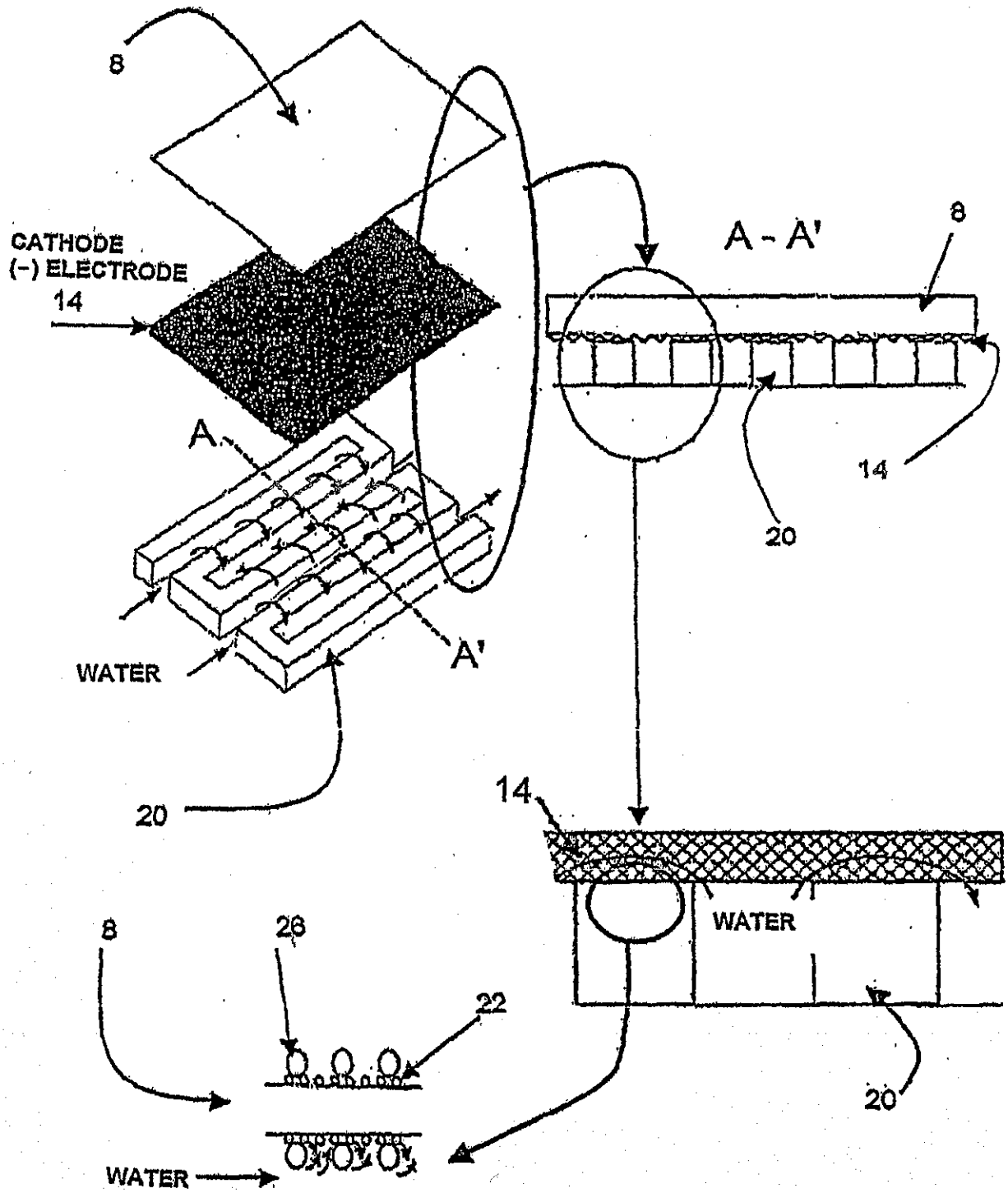
8
CATHODE
(-) ELECTRODE
14
A
A'
WATER
20
A - A'
8
14
20
14
WATER
8
26
22
WATER
20

FIG. 2

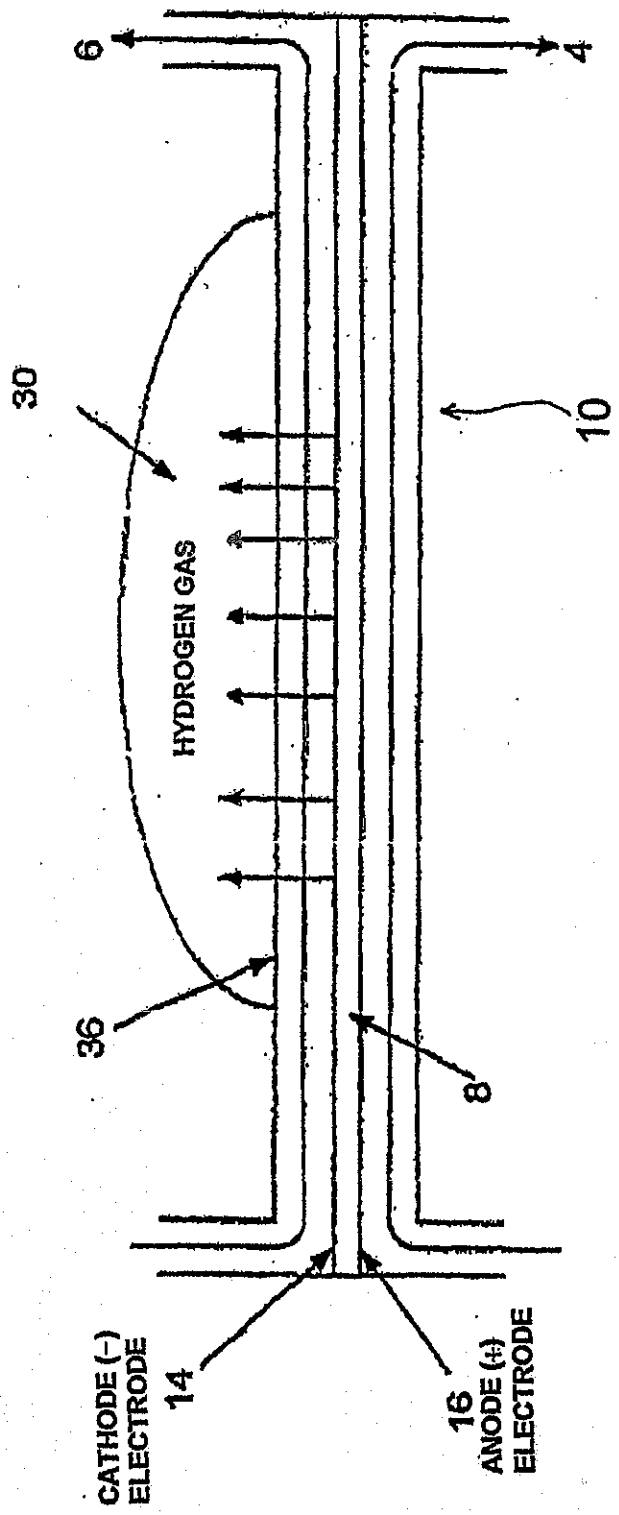
6
4
30
10
HYDROGEN GAS
36
8
CATHODE (-) ELECTRODE
14
16
ANODE (+) ELECTRODE

FIG. 3

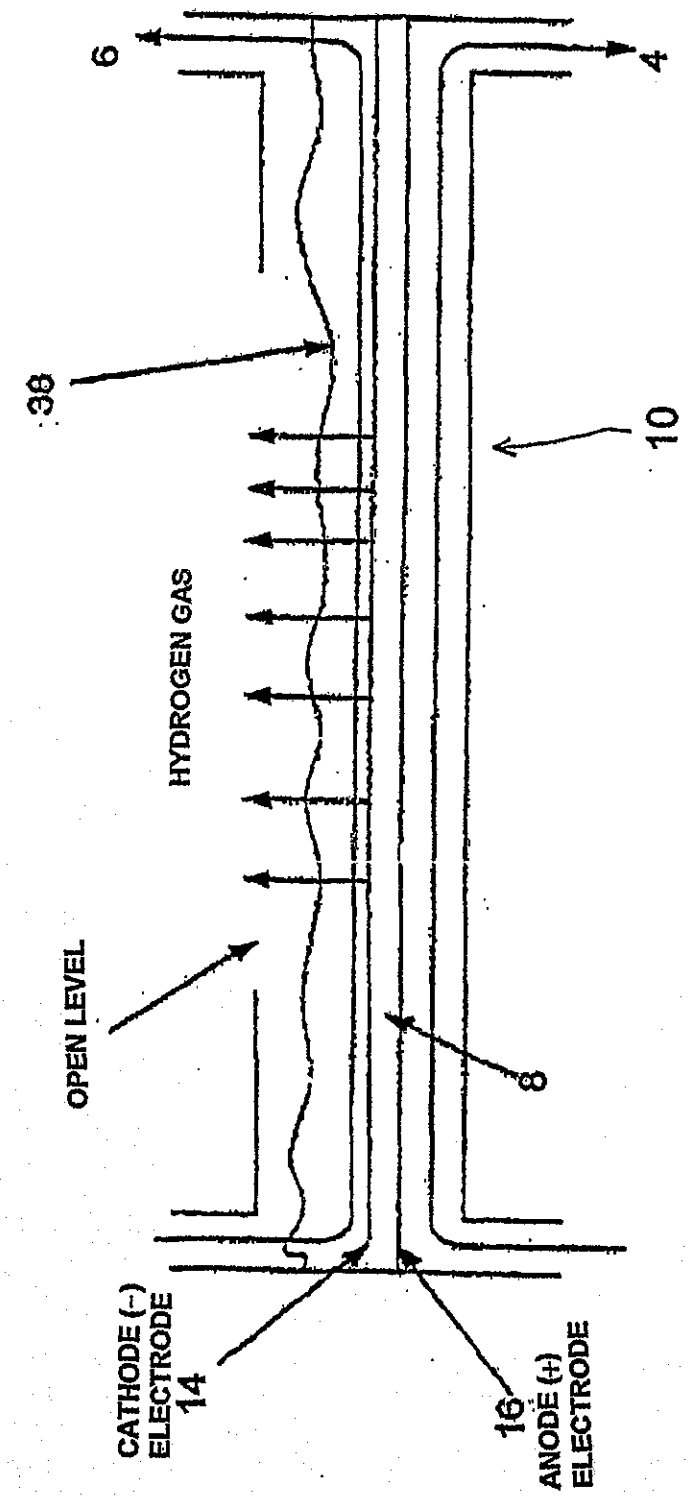
6
4
38
10
HYDROGEN GAS
OPEN LEVEL
8
CATHODE (-)
ELECTRODE
14
16
ANODE (+)
ELECTRODE

FIG. 4

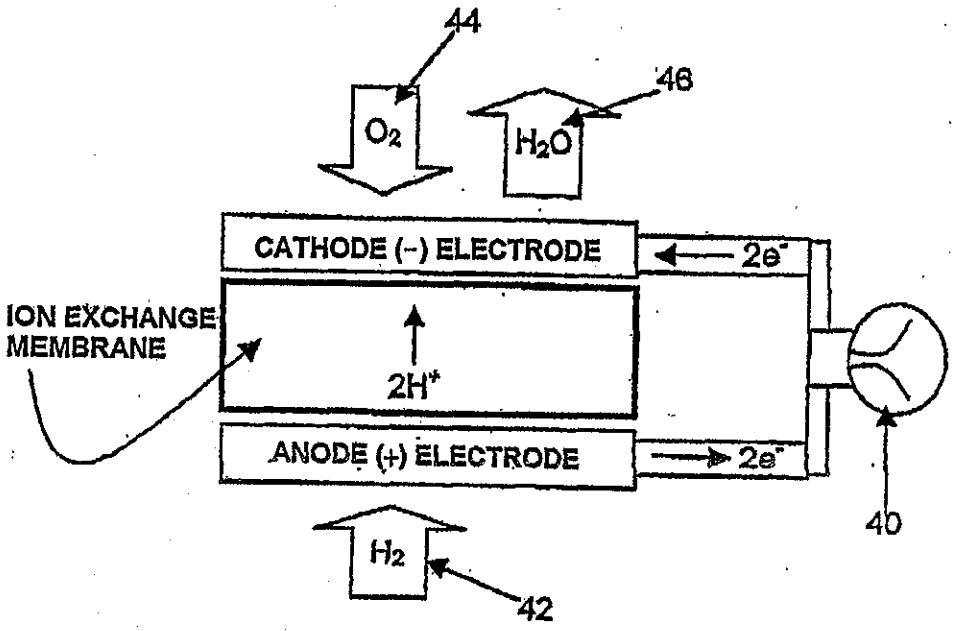
44
46
O_2
H_2O
CATHODE (-) ELECTRODE
$2e^-$
ION EXCHANGE MEMBRANE
$2H^+$
ANODE (+) ELECTRODE
$2e^-$
40
H_2
42

FIG. 5

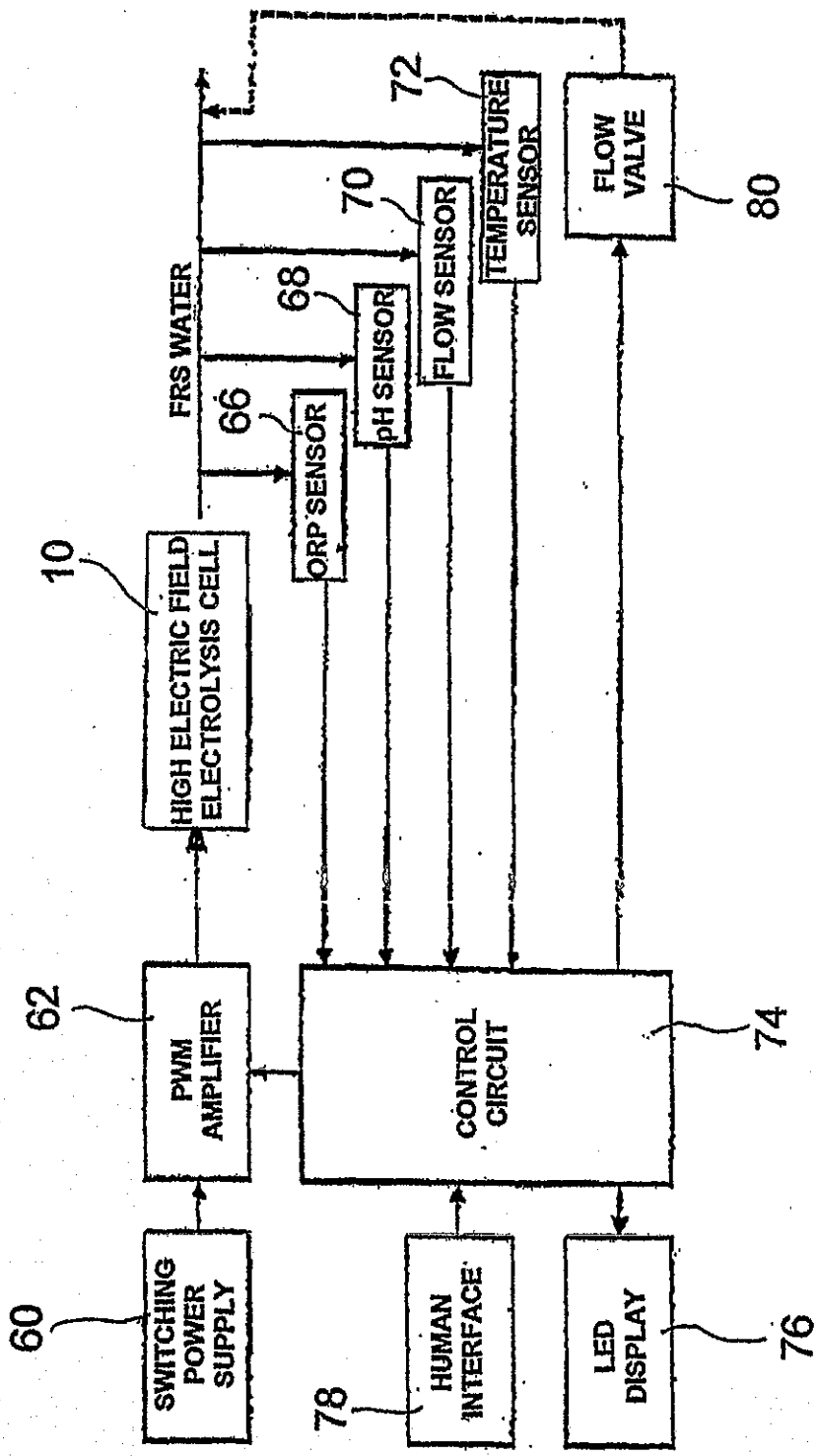
FRS WATER
HIGH ELECTRIC FIELD ELECTROLYSIS CELL
10
ORP SENSOR
66
pH SENSOR
68
FLOW SENSOR
70
TEMPERATURE SENSOR
72
FLOW VALVE
80
PWM AMPLIFIER
62
CONTROL CIRCUIT
74
SWITCHING POWER SUPPLY
60
HUMAN INTERFACE
78
LED DISPLAY
76

FIG. 6

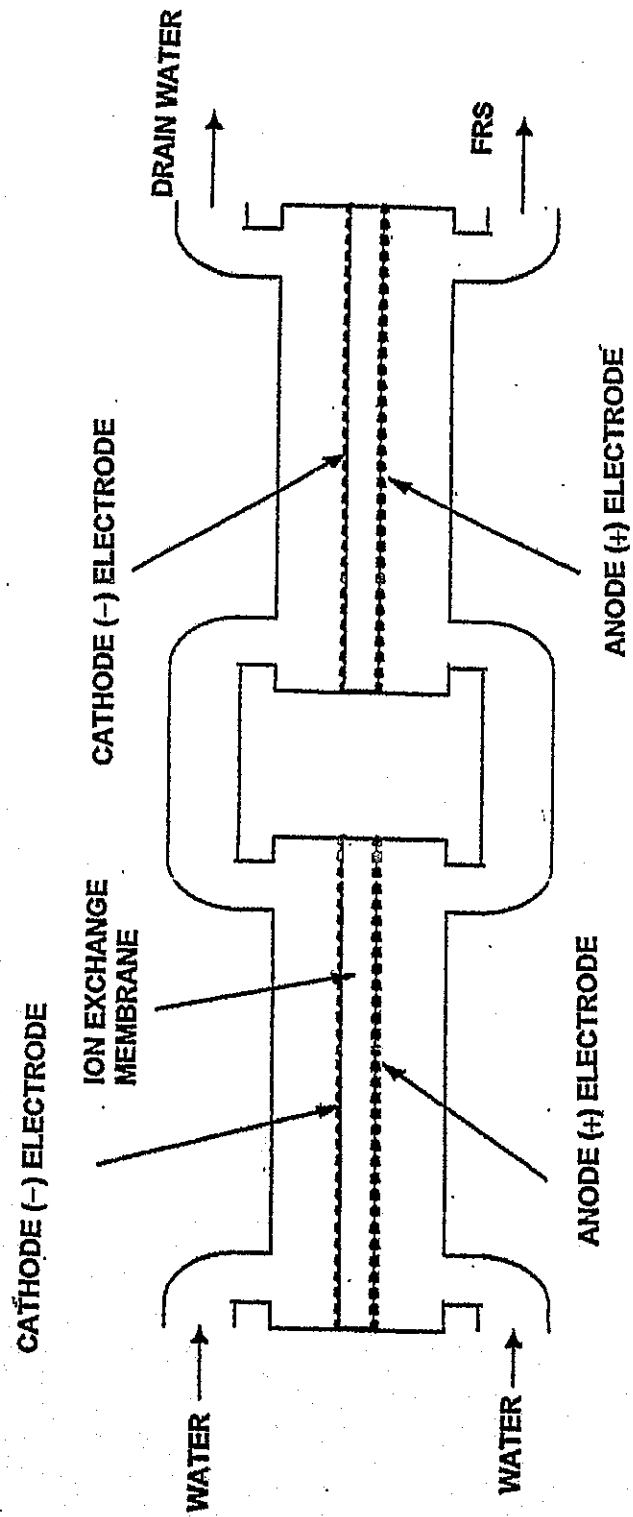
DRAIN WATER
FRS
CATHODE (-) ELECTRODE
ANODE (+) ELECTRODE
ION EXCHANGE MEMBRANE
CATHODE (-) ELECTRODE
ANODE (+) ELECTRODE
WATER
WATER

FIG. 7

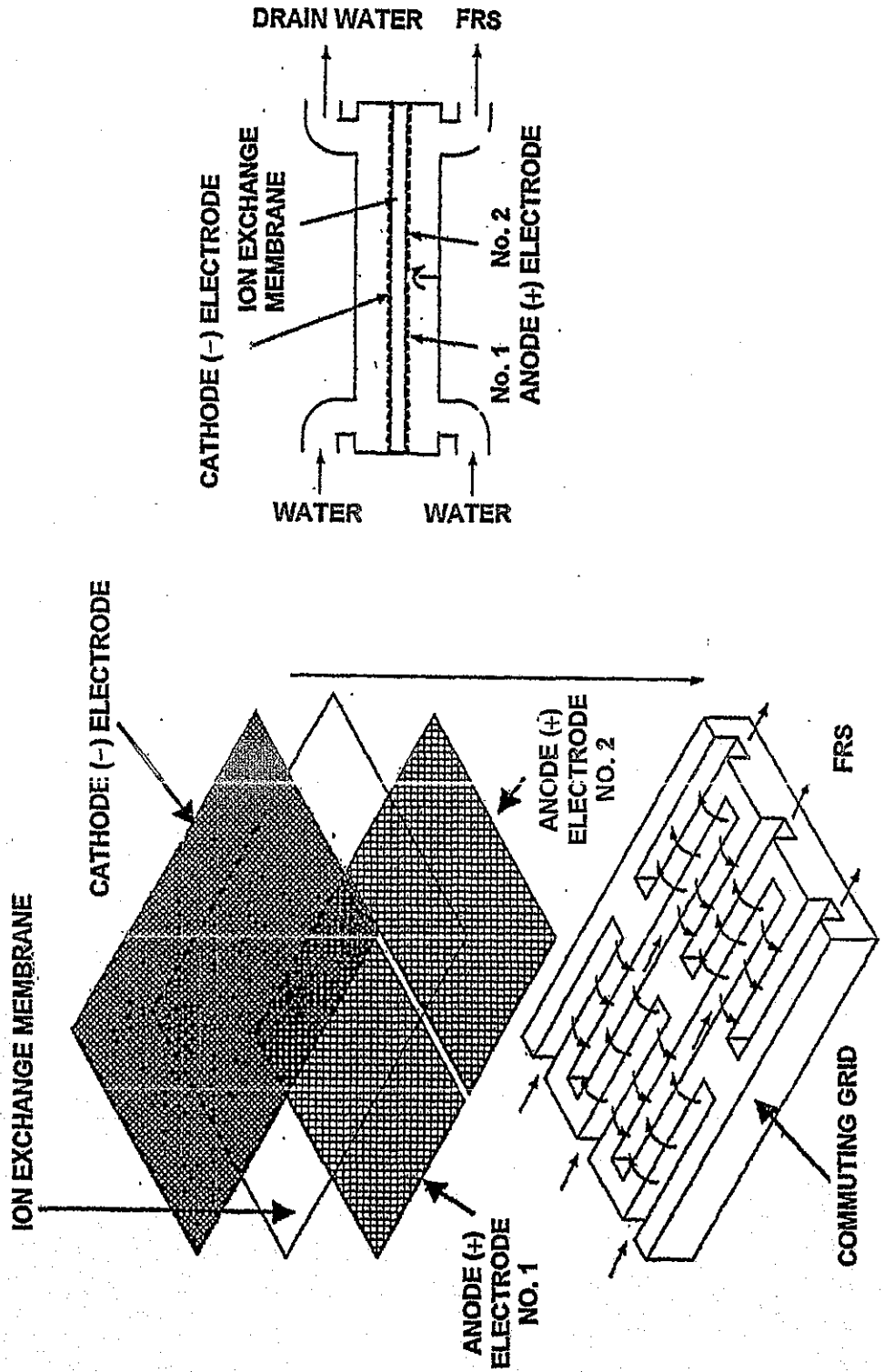
DRAIN WATER
FRS
CATHODE (-) ELECTRODE
ION EXCHANGE MEMBRANE
No. 2
ANODE (+) ELECTRODE
No. 1
WATER
WATER
CATHODE (-) ELECTRODE
ION EXCHANGE MEMBRANE
ANODE (+) ELECTRODE NO. 2
ANODE (+) ELECTRODE NO. 1
FRS
COMMUTING GRID

FIG. 8

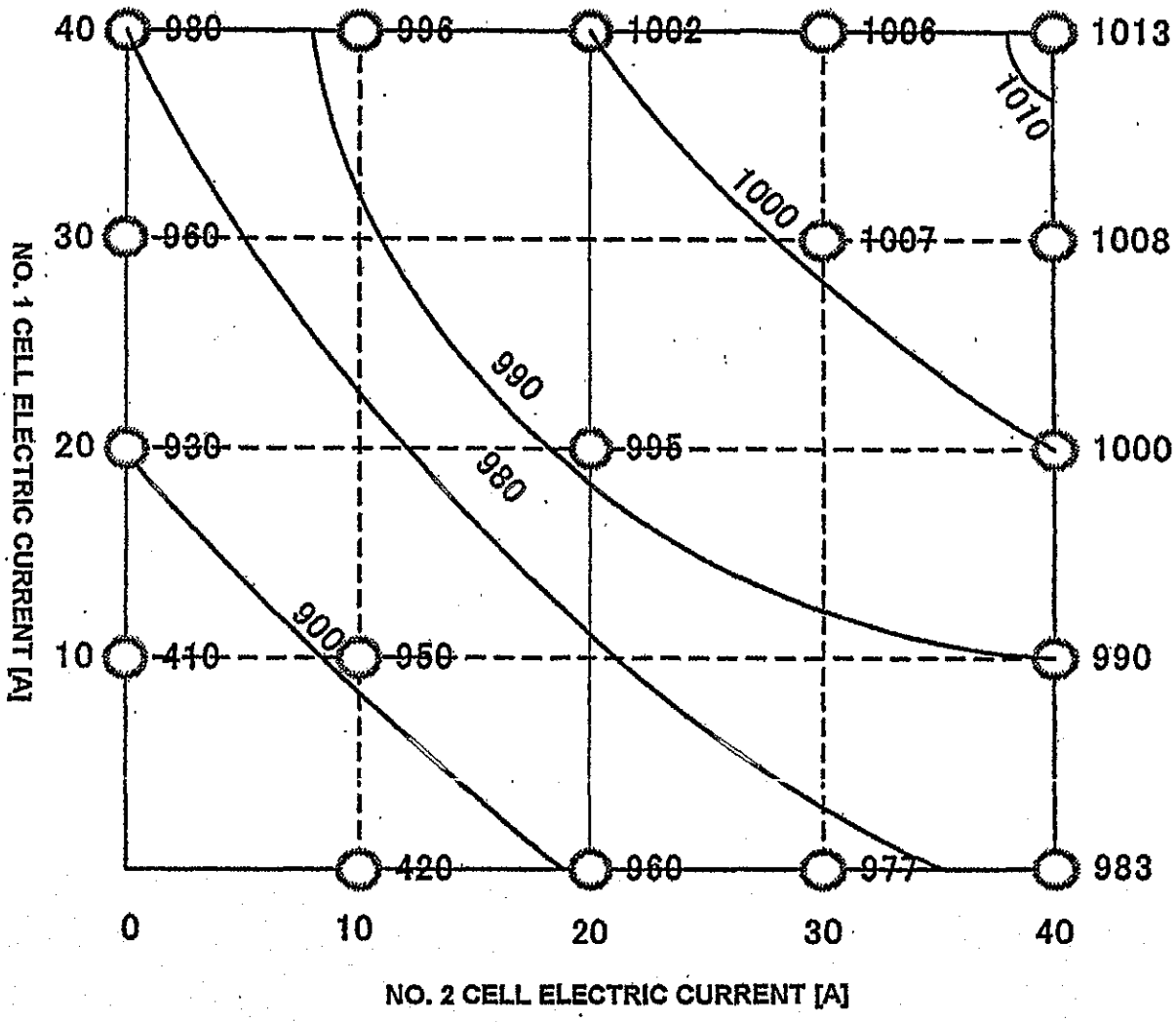
40
30
20
10
0
10
20
30
40
980
996
1002
1006
1013
960
1007
1008
930
995
1000
410
950
990
420
960
977
983
1010
1000
990
980
900
NO. 1 CELL ELECTRIC CURRENT [A]
NO. 2 CELL ELECTRIC CURRENT [A]

FIG. 9