(12) INTERNATIONAL APPLICATION PUBLISHED UNDER THE PATENT COOPERATION TREATY (PCT)

(19) World Intellectual Property Organization
International Bureau

(43) International Publication Date
30 December 2021 (30.12.2021)

WIPO | PCT

(10) International Publication Number
WO 2021/262446 A1

(51) International Patent Classification:
C23C 16/455 (2006.01)

(21) International Application Number:
PCT/US2021/036808

(22) International Filing Date:
10 June 2021 (10.06.2021)

(25) Filing Language: English

(26) Publication Language: English

(30) Priority Data:
63/042,980 23 June 2020 (23.06.2020) US

(71) Applicant: **LAM RESEARCH CORPORATION** [US/US]; 4650 Cushing Parkway, Fremont, California 94538 (US).

(72) Inventors: **TEHRANI, Sam Jafarian**; 16645 SW 134th Terrace, King City, Oregon 97224 (US). **CMELAK, Bryan Anthony**; 15686 SW Pleasantview Court, Tigard, Oregon 97224 (US). **HIESTER, Jacob Lee**; 300 S. River Street, Newberg, Oregon 97132 (US). **LUO, Bin**; 10240 SW 153rd Avenue, Beaverton, Oregon 97007 (US). **WILTSE, John Michael**; 14 Del Prado Street, Lake Oswego, Oregon 97035 (US).

(74) Agent: **SCHEER, Bradley W.** et al.; Schwegman Lundberg & Woessner, P.A., P.O. Box 2938, Minneapolis, Minnesota 55402 (US).

(81) Designated States *(unless otherwise indicated, for every kind of national protection available)*: AE, AG, AL, AM, AO, AT, AU, AZ, BA, BB, BG, BH, BN, BR, BW, BY, BZ, CA, CH, CL, CN, CO, CR, CU, CZ, DE, DJ, DK, DM, DO, DZ, EC, EE, EG, ES, FI, GB, GD, GE, GH, GM, GT, HN, HR, HU, ID, IL, IN, IR, IS, IT, JO, JP, KE, KG, KH, KN, KP, KR, KW, KZ, LA, LC, LK, LR, LS, LU, LY, MA, MD, ME, MG, MK, MN, MW, MX, MY, MZ, NA, NG, NI, NO, NZ, OM, PA, PE, PG, PH, PL, PT, QA, RO, RS, RU, RW, SA, SC, SD, SE, SG, SK, SL, ST, SV, SY, TH, TJ, TM, TN, TR, TT, TZ, UA, UG, US, UZ, VC, VN, WS, ZA, ZM, ZW.

WO 2021/262446 A1

(54) Title: AUTOMATED SHOWERHEAD TILT ADJUSTMENT

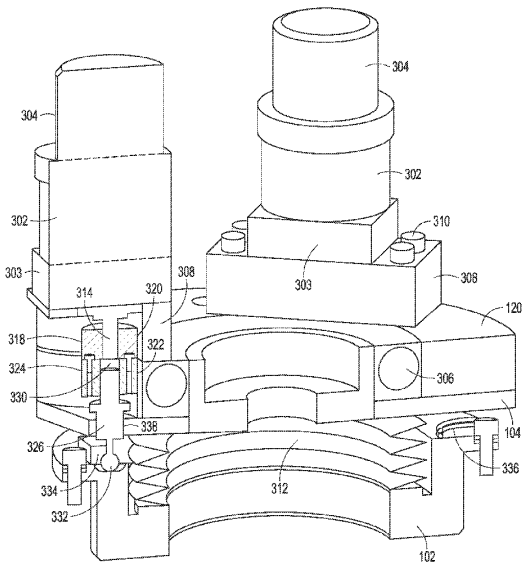

FIG. 3

(57) Abstract: In some examples, an automated tilting system is provided for adjusting an orientation of a component in a substrate processing chamber. The automated tilting system comprises at least one tilt adjustment motor arranged to cooperate with the component and be connected to a portion of the component by a coupling. The coupling is configured such that automated rotational motion by the at least one tilt adjustment motor imparts corresponding axial movement, relative to the at least one tilt adjustment motor or a datum structure, to the connected portion of the component to adjust the orientation of the component in the processing chamber.

[Continued on next page]

(84) **Designated States** *(unless otherwise indicated, for every kind of regional protection available)*: ARIPO (BW, GH, GM, KE, LR, LS, MW, MZ, NA, RW, SD, SL, ST, SZ, TZ, UG, ZM, ZW), Eurasian (AM, AZ, BY, KG, KZ, RU, TJ, TM), European (AL, AT, BE, BG, CH, CY, CZ, DE, DK, EE, ES, FI, FR, GB, GR, HR, HU, IE, IS, IT, LT, LU, LV, MC, MK, MT, NL, NO, PL, PT, RO, RS, SE, SI, SK, SM, TR), OAPI (BF, BJ, CF, CG, CI, CM, GA, GN, GQ, GW, KM, ML, MR, NE, SN, TD, TG).

Published:

— *with international search report (Art. 21(3))*