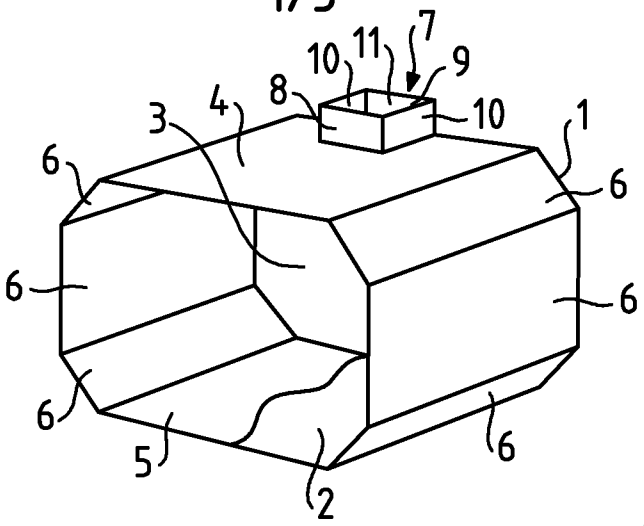

FIG.1

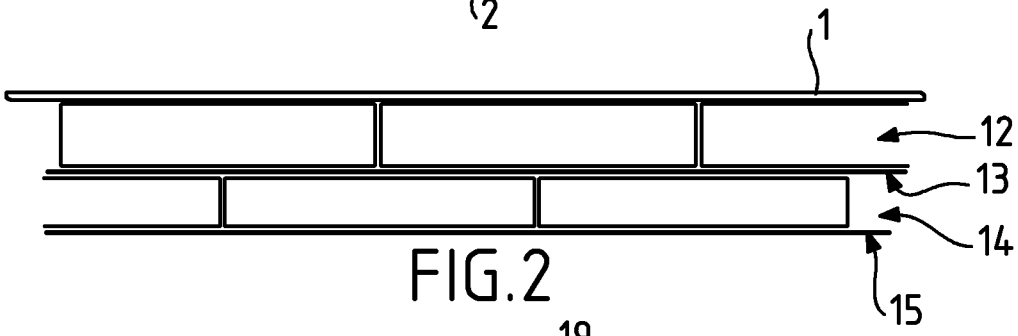

FIG.2

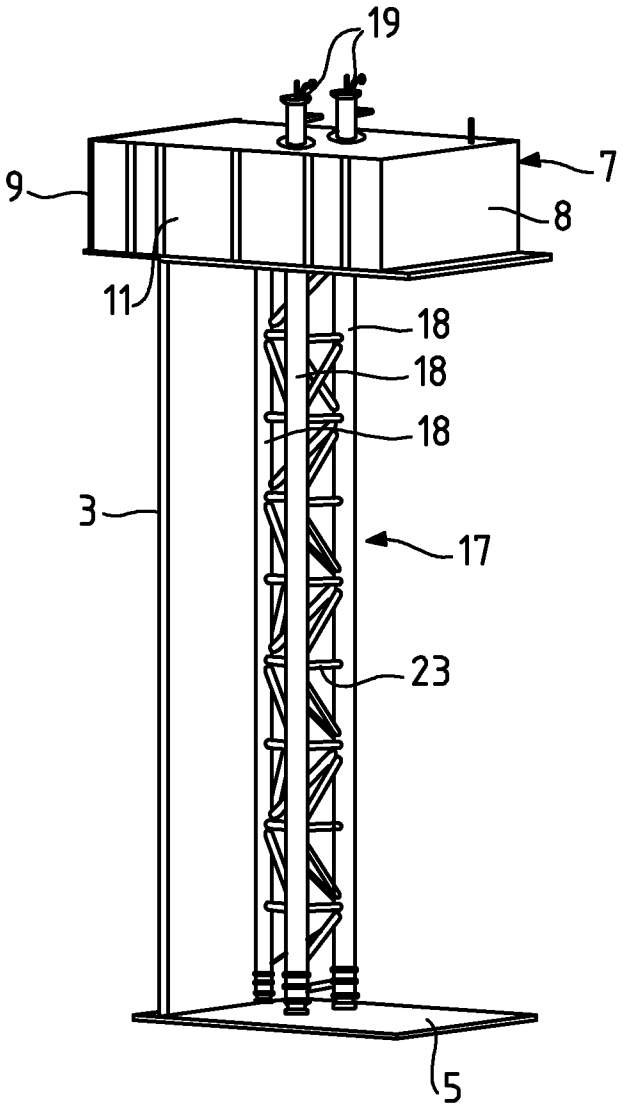

FIG.3

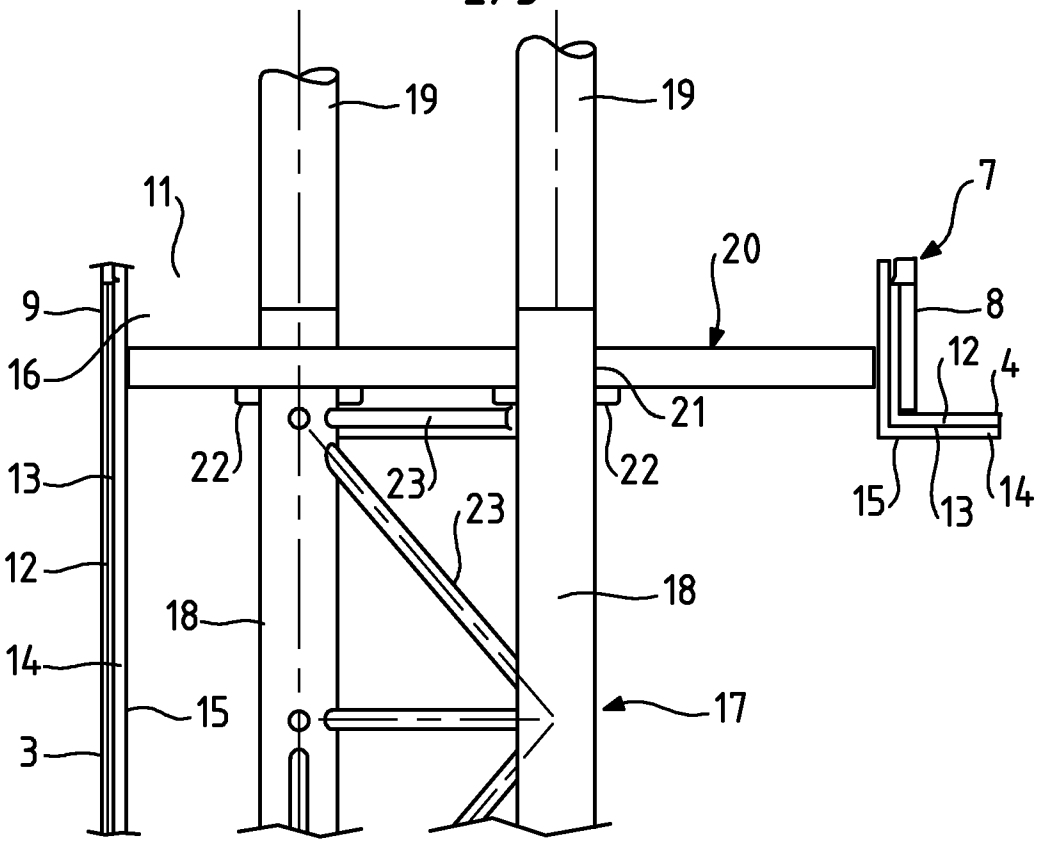
19
19
11
7
20
9
8
16
12
4
21
22
22
23
23
15
13
14
13
12
18
18
14
15
17
3

FIG.4

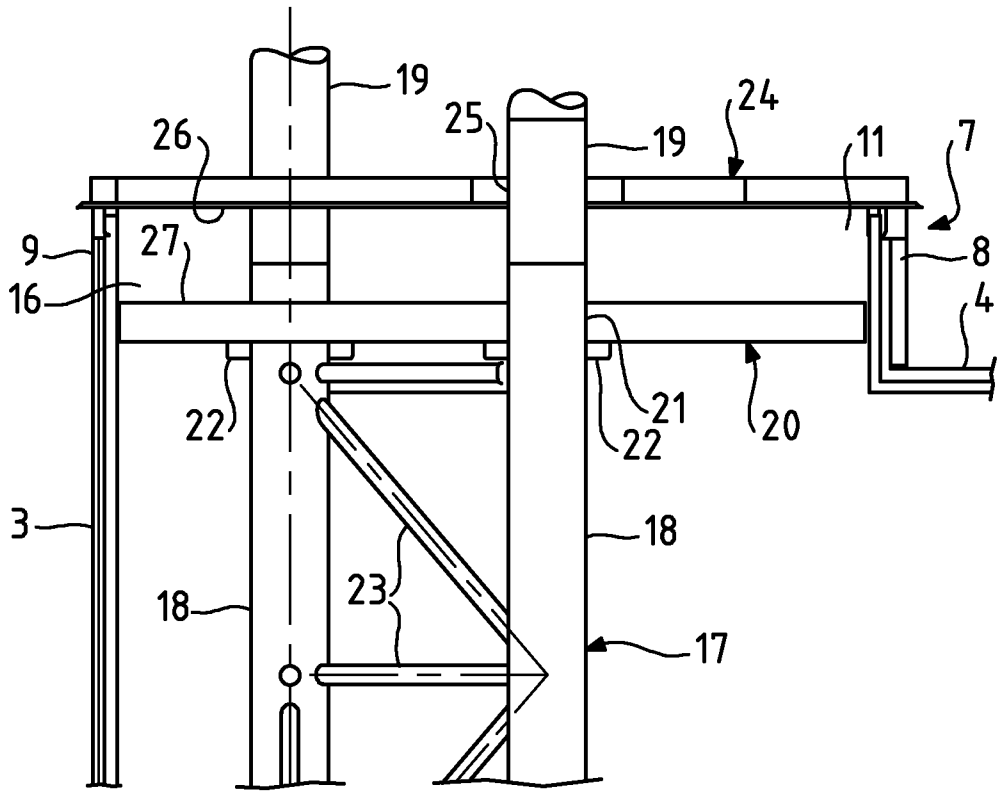
19
24
26
25
19
11
7
9
27
8
16
4
21
20
22
22
3
18
23
18
17

FIG.5

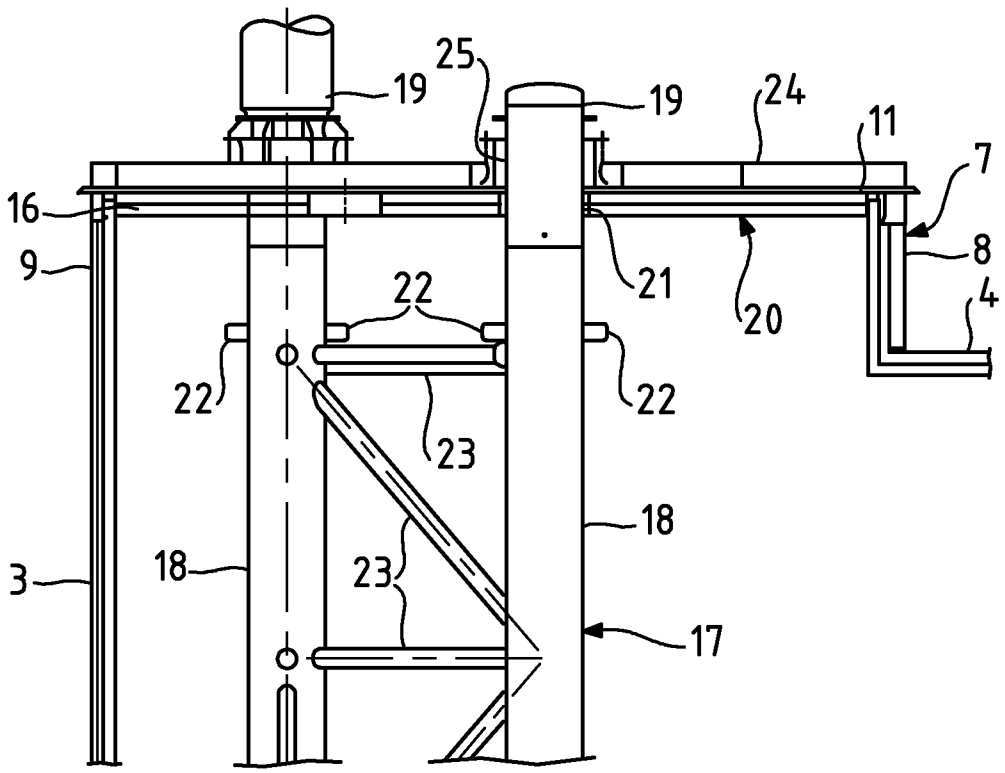

FIG.6

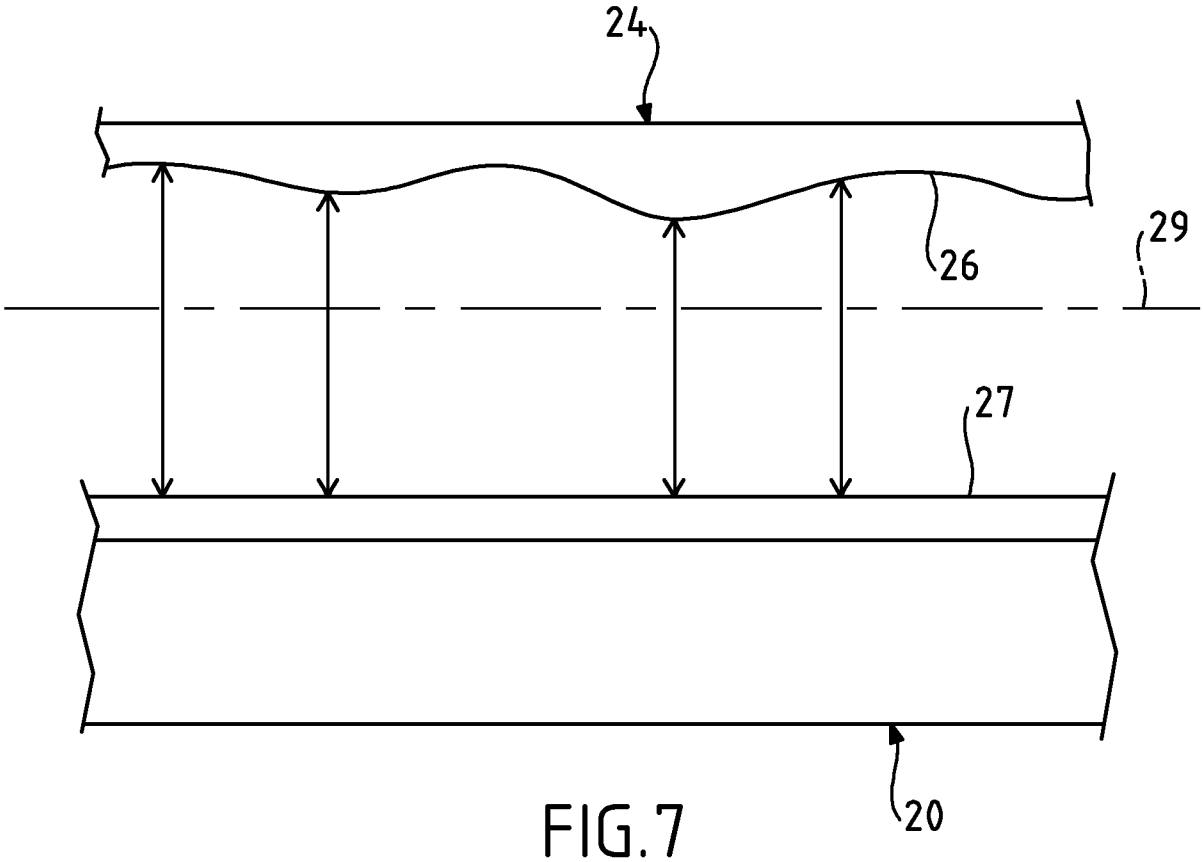

FIG.7

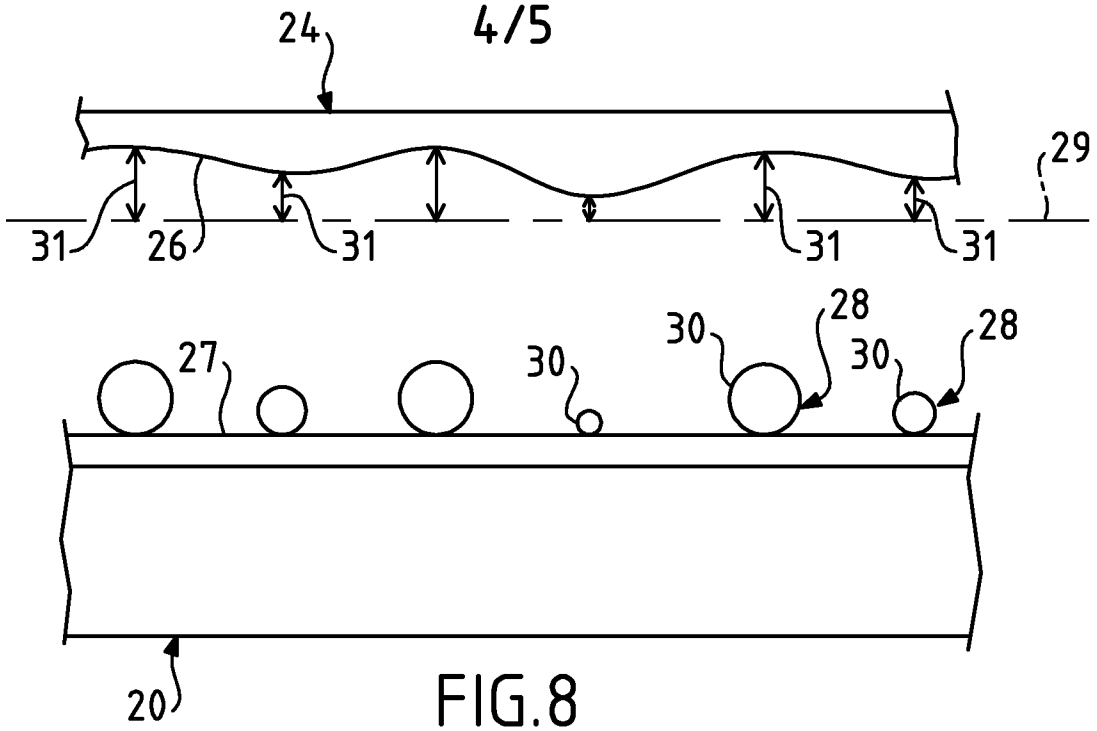

FIG.8

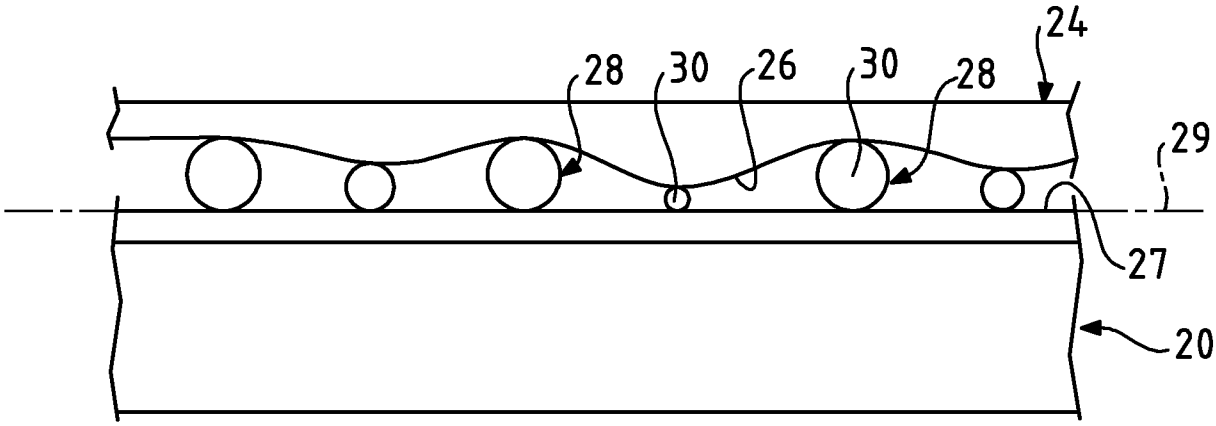

FIG.9

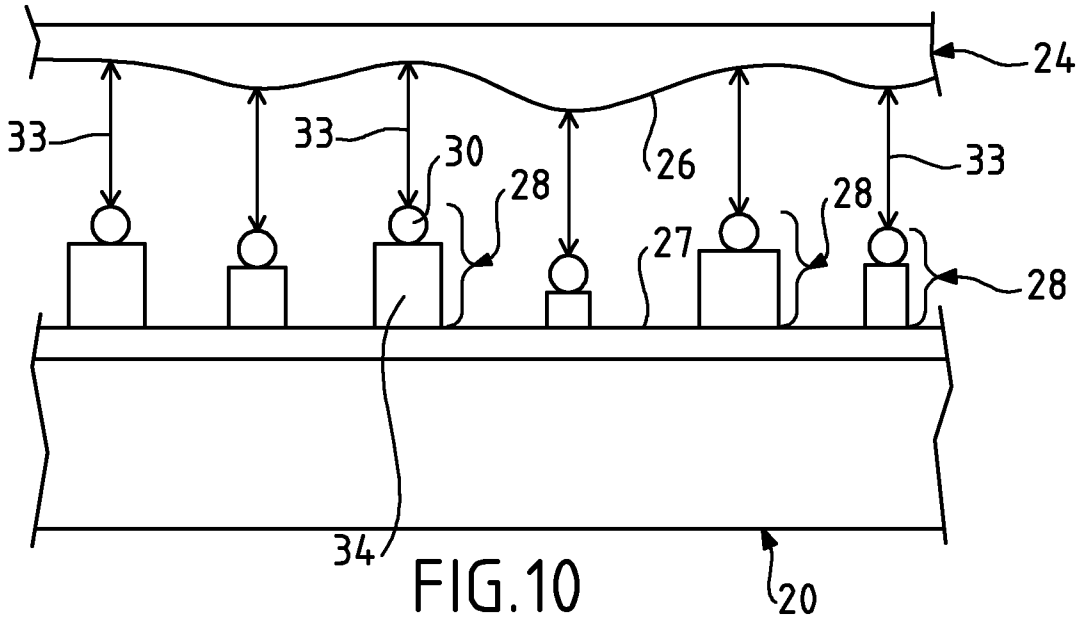

FIG.10

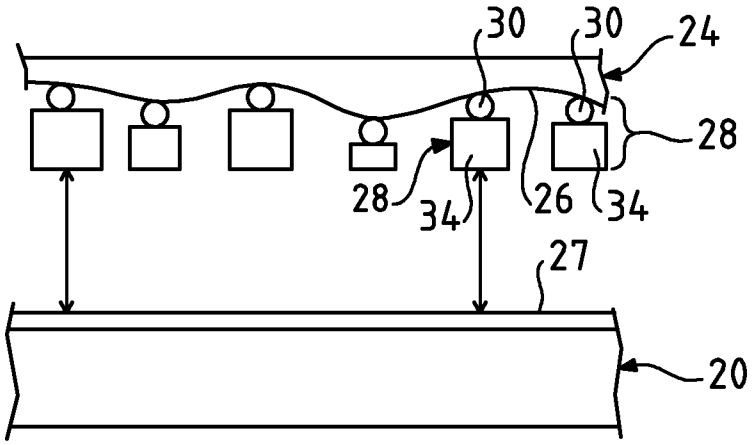

FIG.11

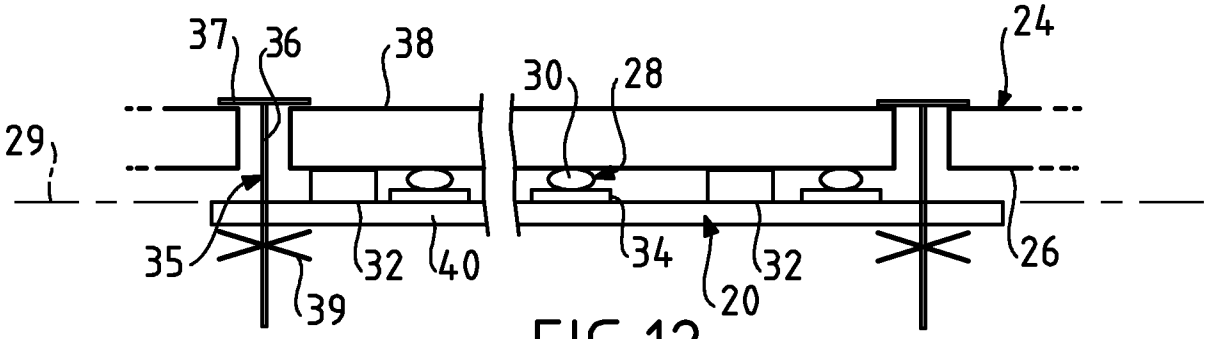

FIG.12

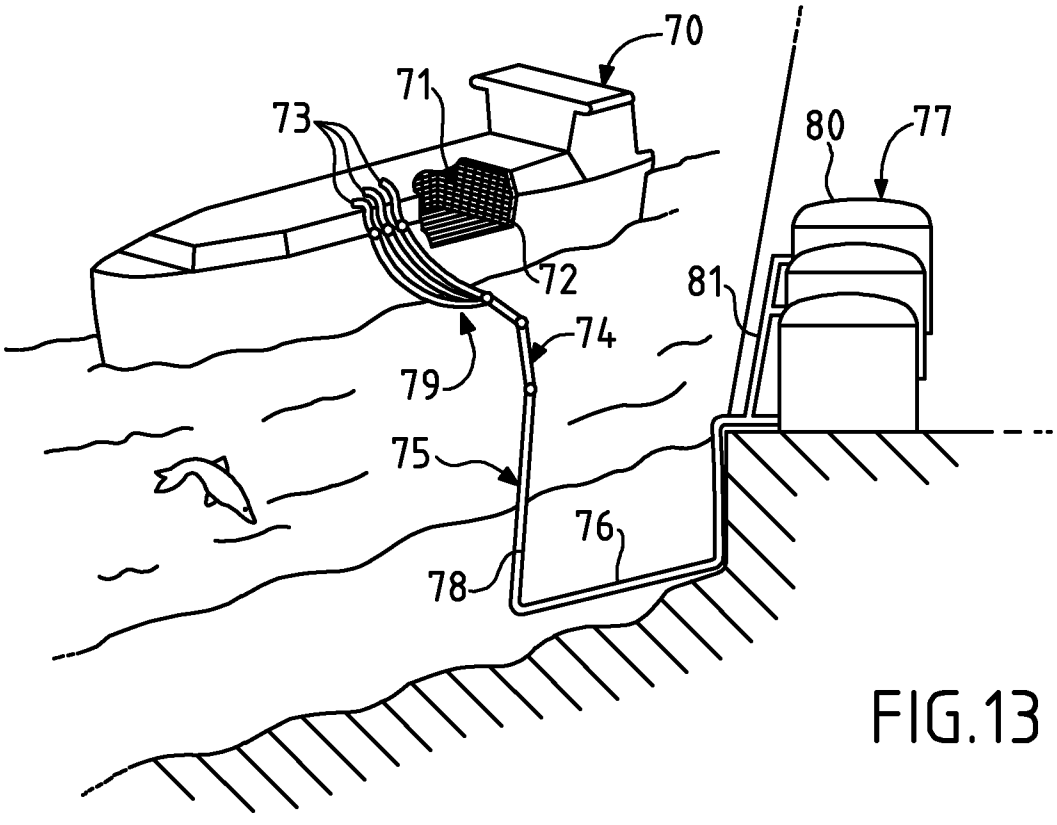

FIG.13