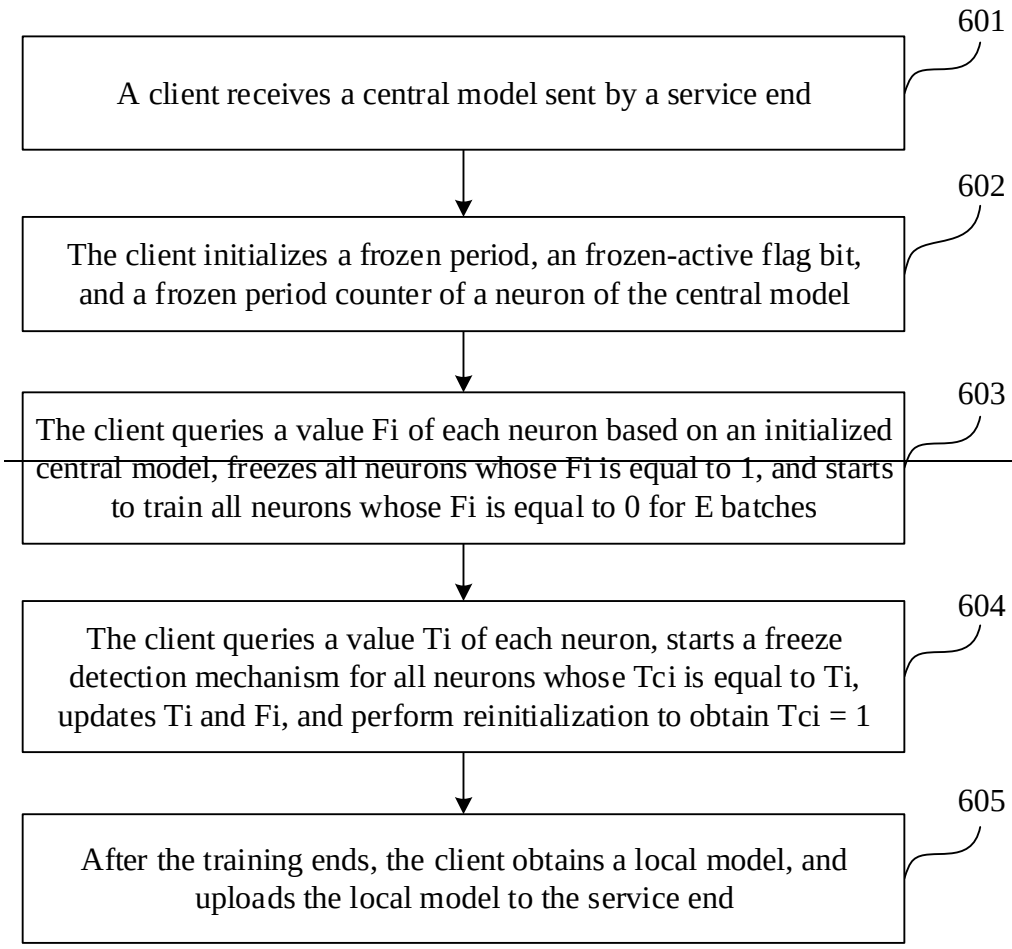
601
A client receives a central model sent by a service end
602
The client initializes a frozen period, an frozen-active flag bit, and a frozen period counter of a neuron of the central model
603
The client queries a value Fi of each neuron based on an initialized central model, freezes all neurons whose Fi is equal to 1, and starts to train all neurons whose Fi is equal to 0 for E batches
604
The client queries a value Ti of each neuron, starts a freeze detection mechanism for all neurons whose Tci is equal to Ti, updates Ti and Fi, and perform reinitialization to obtain Tci = 1
605
After the training ends, the client obtains a local model, and uploads the local model to the service end

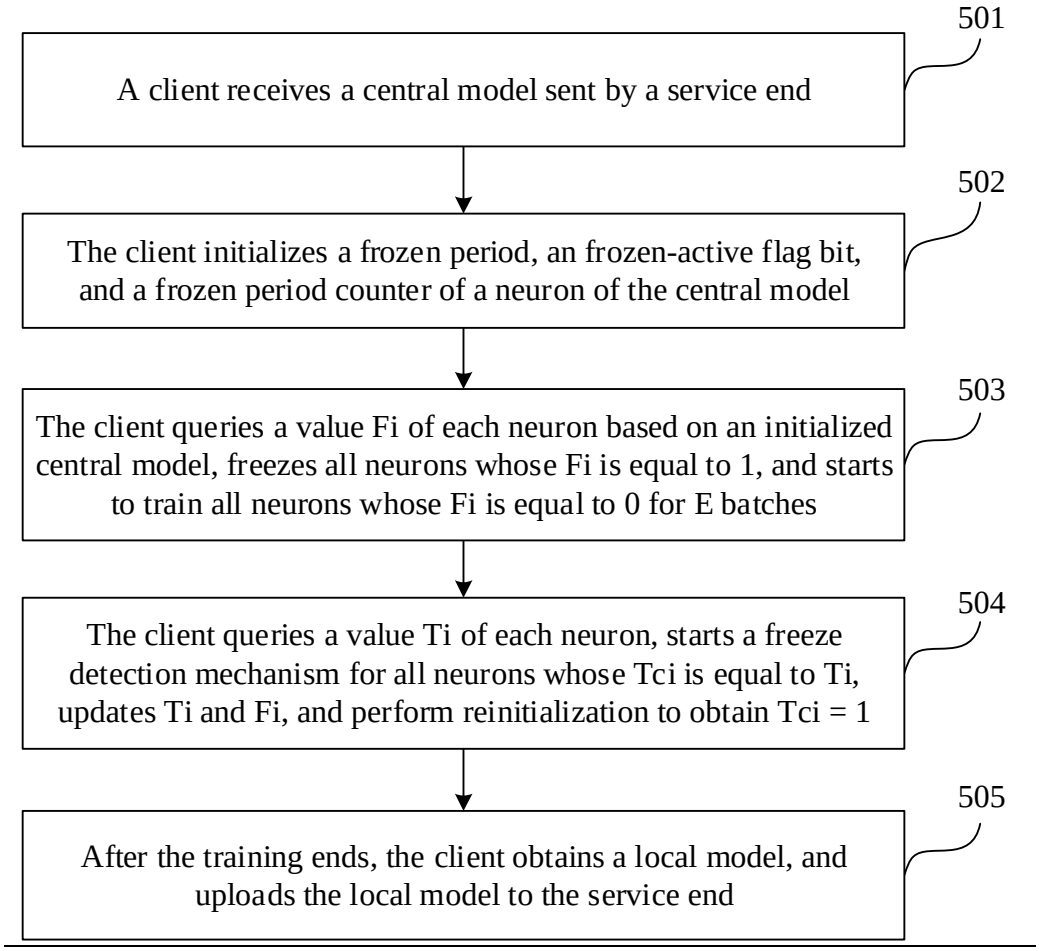
501
A client receives a central model sent by a service end
502
The client initializes a frozen period, an frozen-active flag bit, and a frozen period counter of a neuron of the central model
503
The client queries a value Fi of each neuron based on an initialized central model, freezes all neurons whose Fi is equal to 1, and starts to train all neurons whose Fi is equal to 0 for E batches
504
The client queries a value Ti of each neuron, starts a freeze detection mechanism for all neurons whose Tci is equal to Ti, updates Ti and Fi, and perform reinitialization to obtain Tci = 1
505
After the training ends, the client obtains a local model, and uploads the local model to the service end

FIG. 5

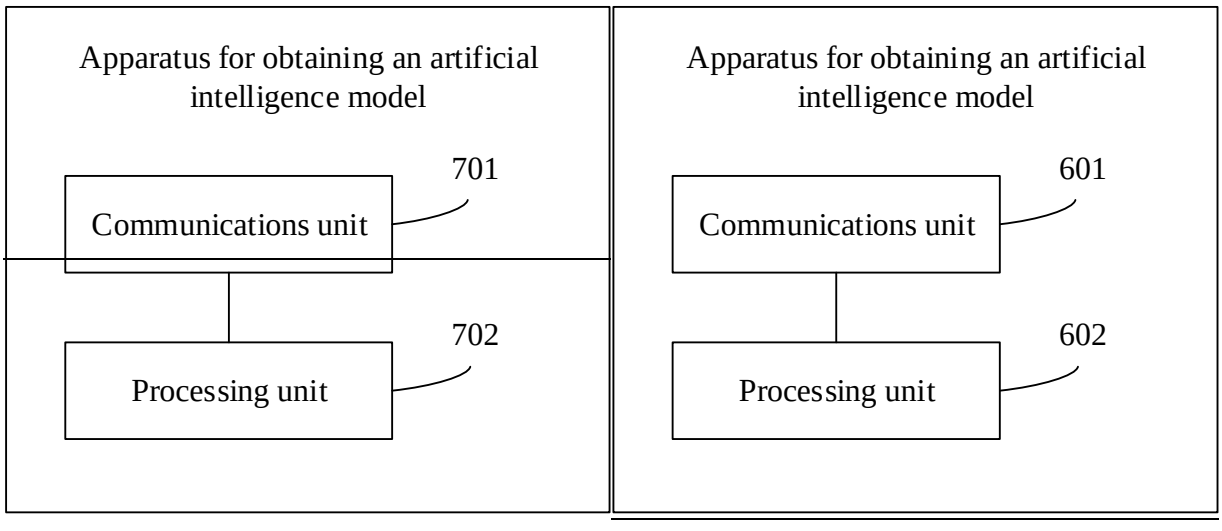
Apparatus for obtaining an artificial intelligence model
701
Communications unit
702
Processing unit
Apparatus for obtaining an artificial intelligence model
601
Communications unit
602
Processing unit

FIG. 6

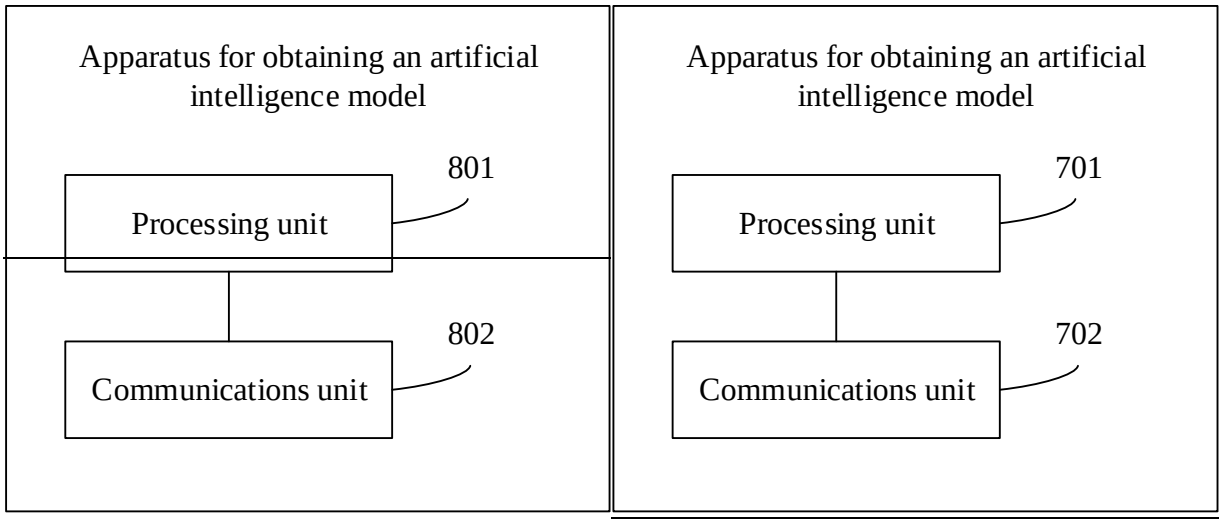
Apparatus for obtaining an artificial intelligence model
801
Processing unit
802
Communications unit
Apparatus for obtaining an artificial intelligence model
701
Processing unit
702
Communications unit

FIG. 7

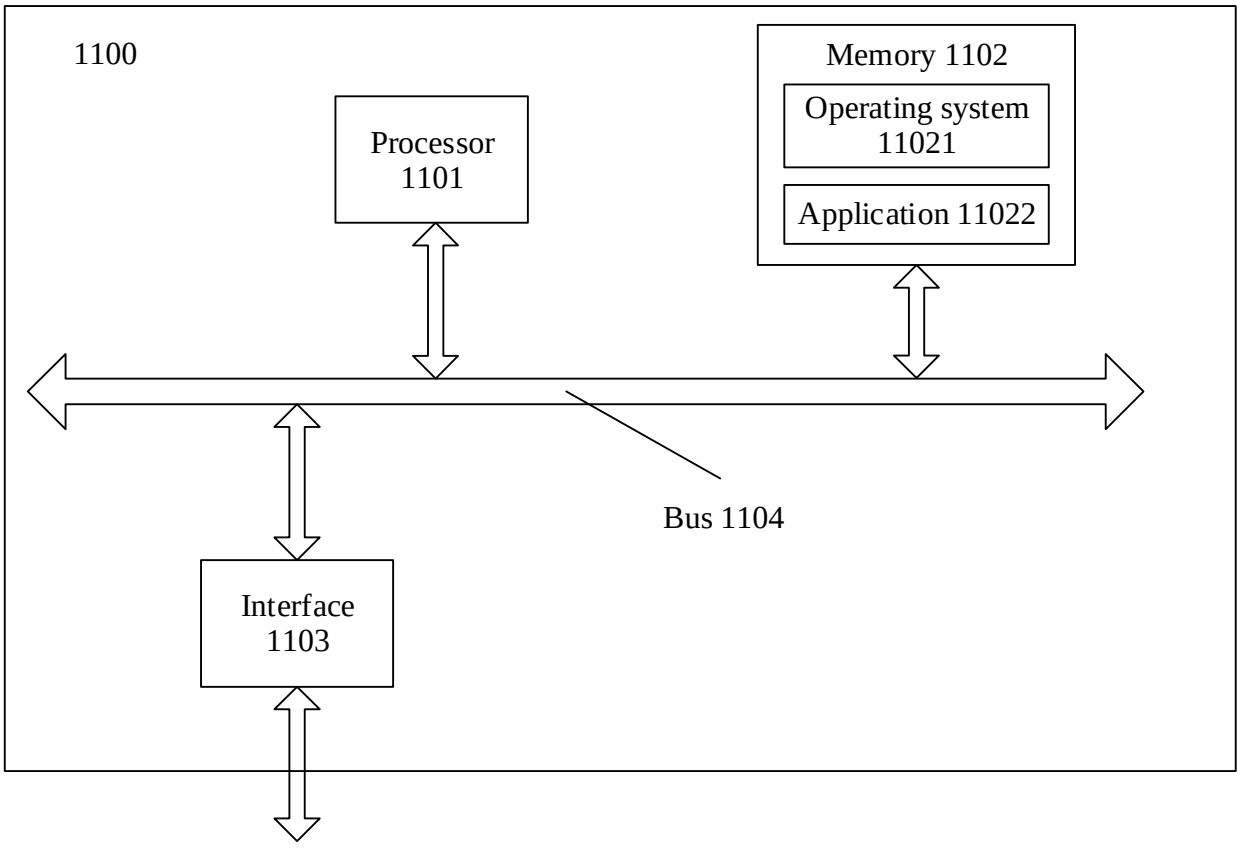
1100
Memory 1102
Operating system 11021
Application 11022
Processor 1101
Bus 1104
Interface 1103

FIG. 8