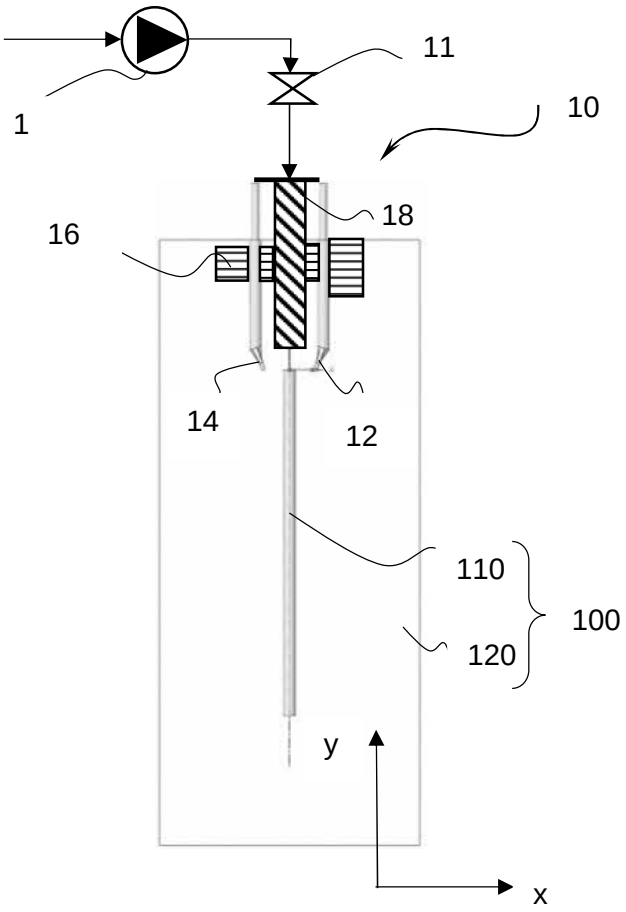

FIG. 1

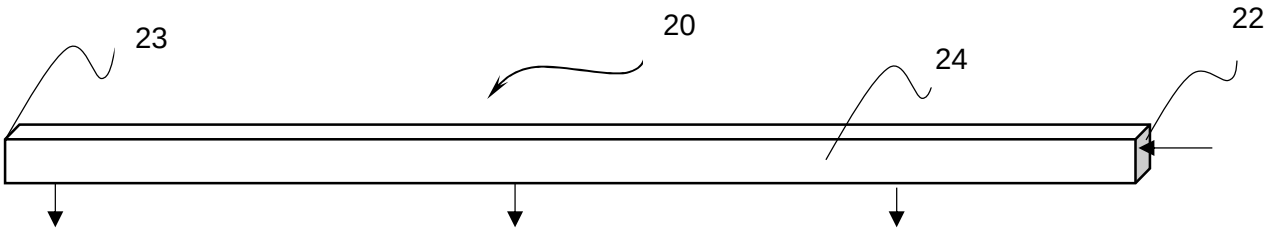

FIG. 2

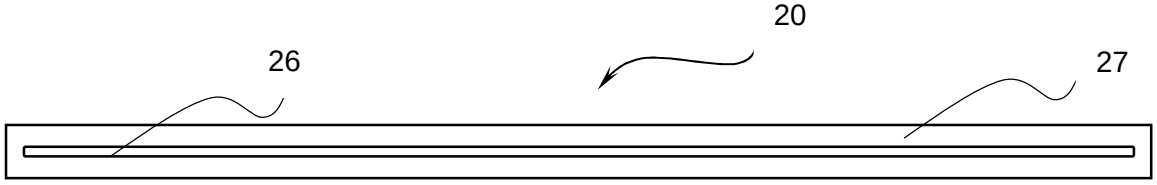

FIG. 3

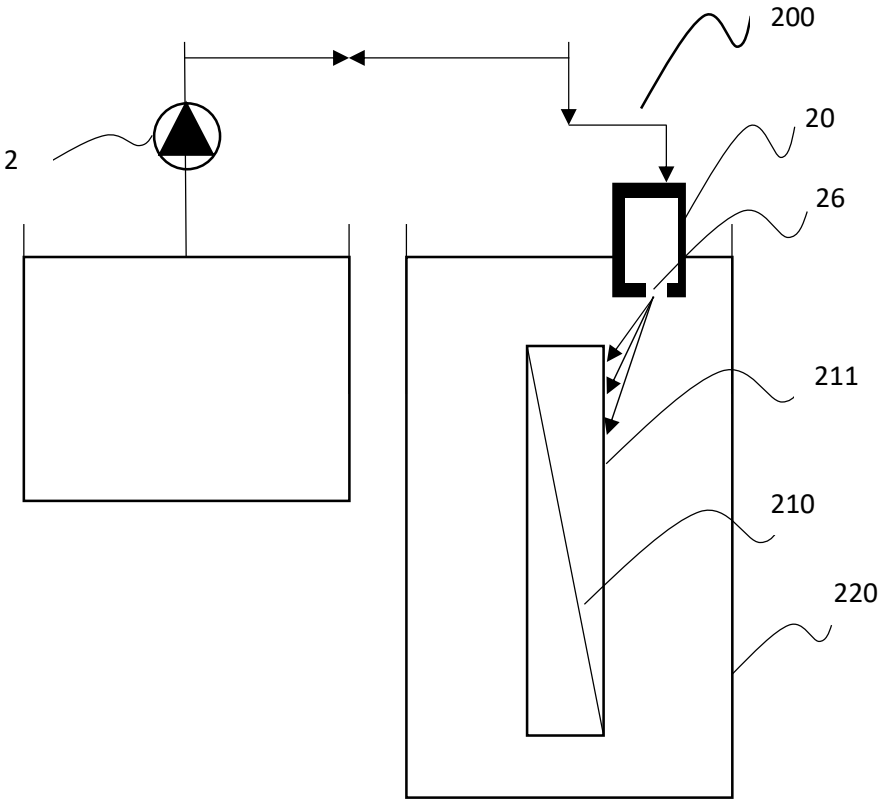

FIG. 4

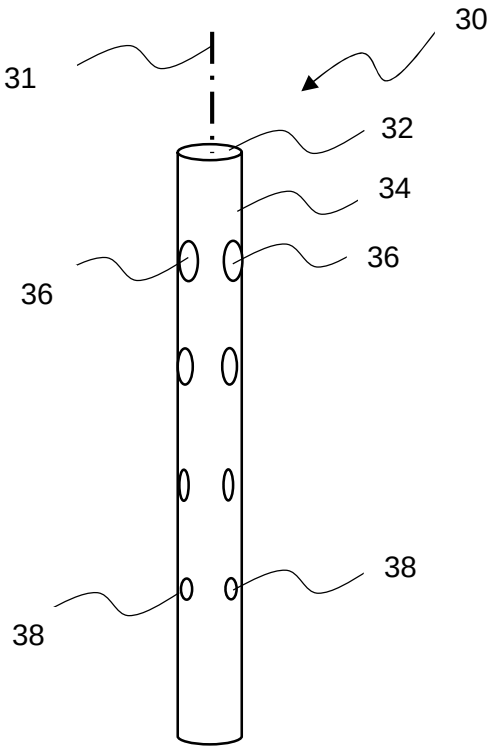

FIG. 5

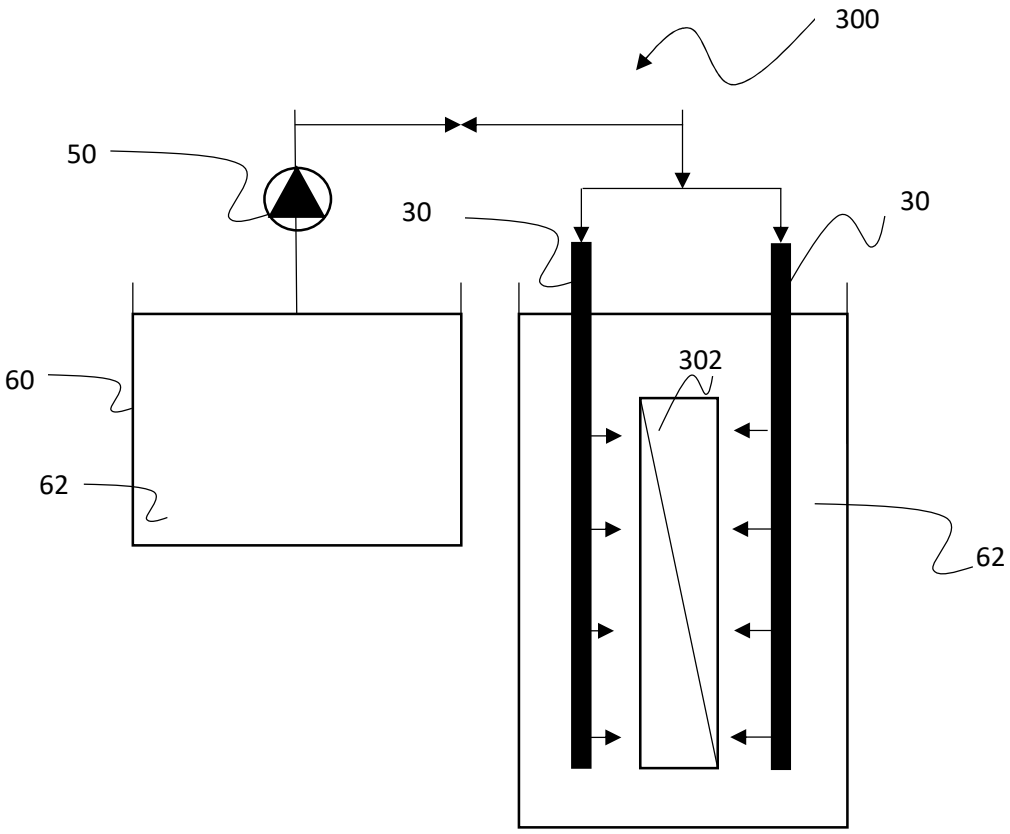

FIG. 8

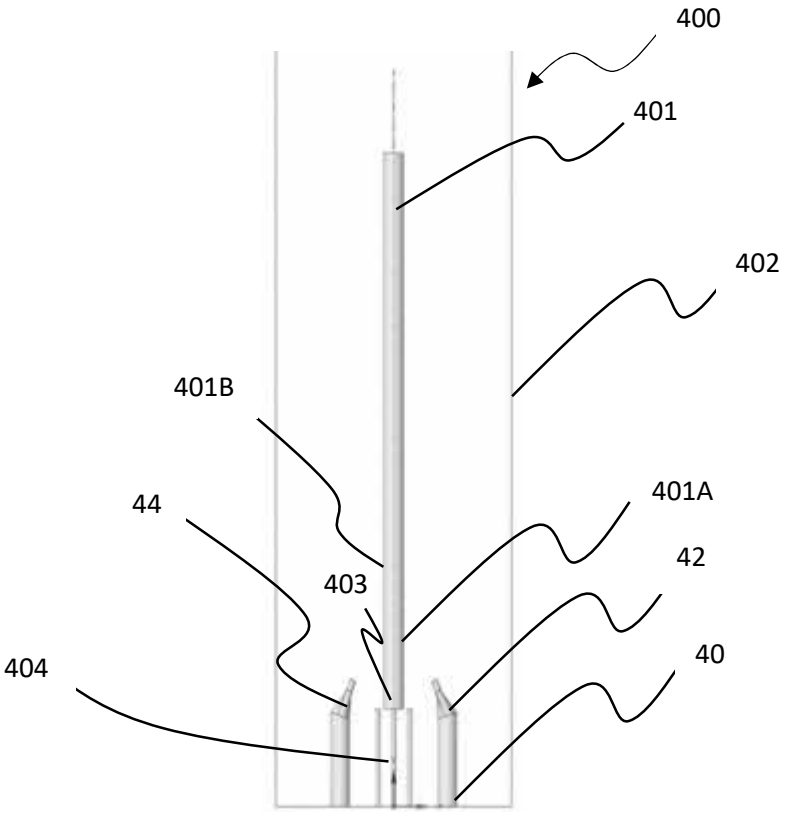

FIG. 9

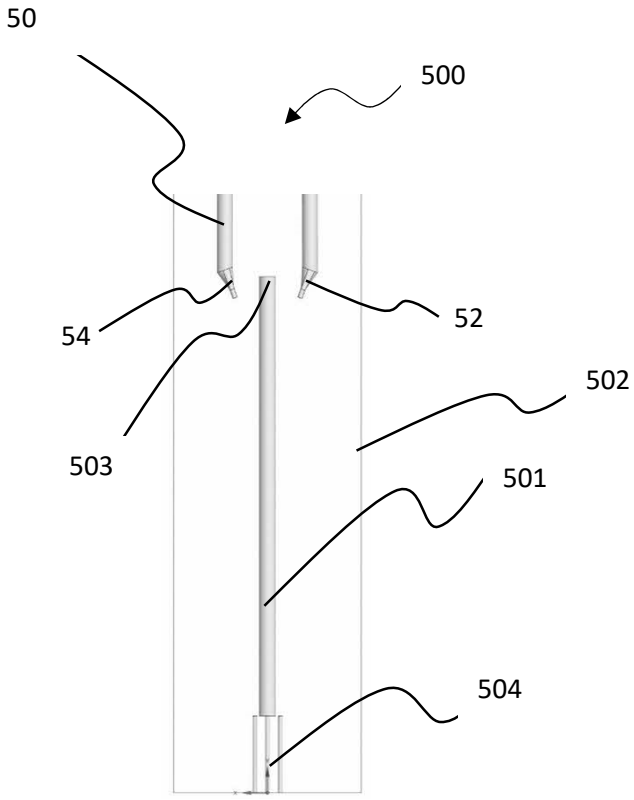
50
500
54
52
502
503
501
504

FIG. 10

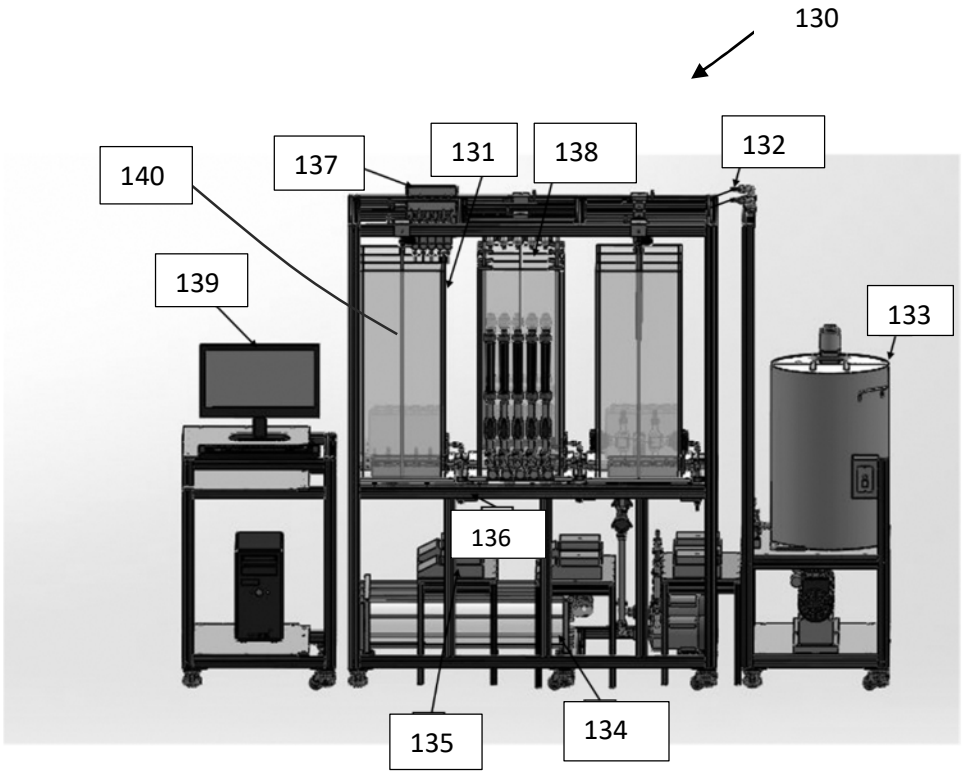
130
140
137
131
138
132
139
133
136
135
134

FIG. 11

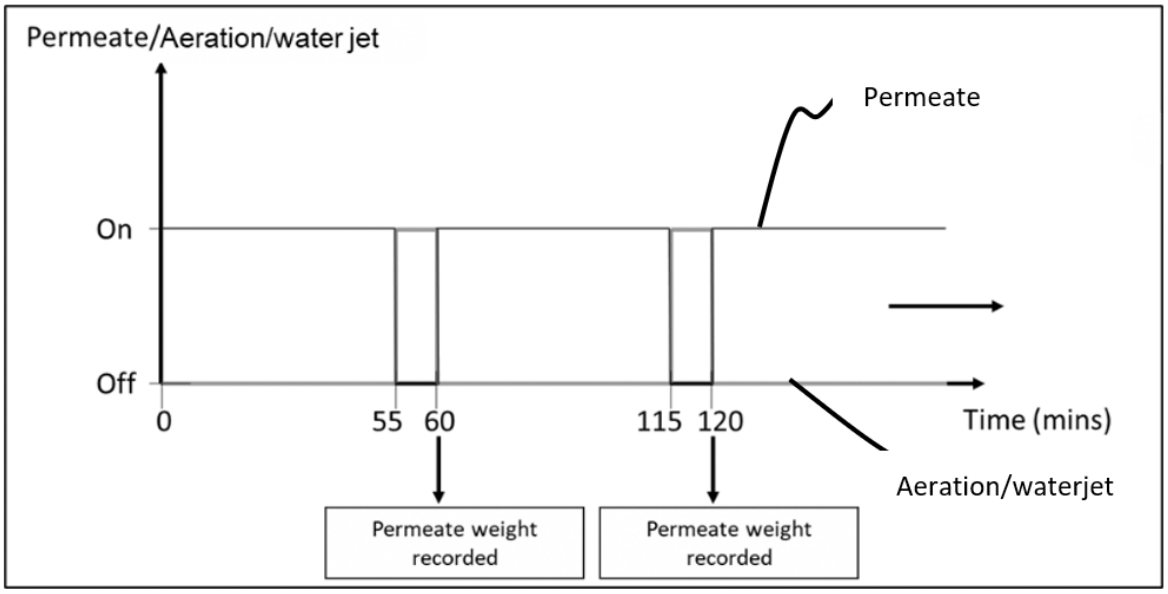
Permeate/Aeration/water jet
Permeate
On
Off
0
55
60
115
120
Time (mins)
Aeration/waterjet
Permeate weight recorded
Permeate weight recorded

FIG. 12

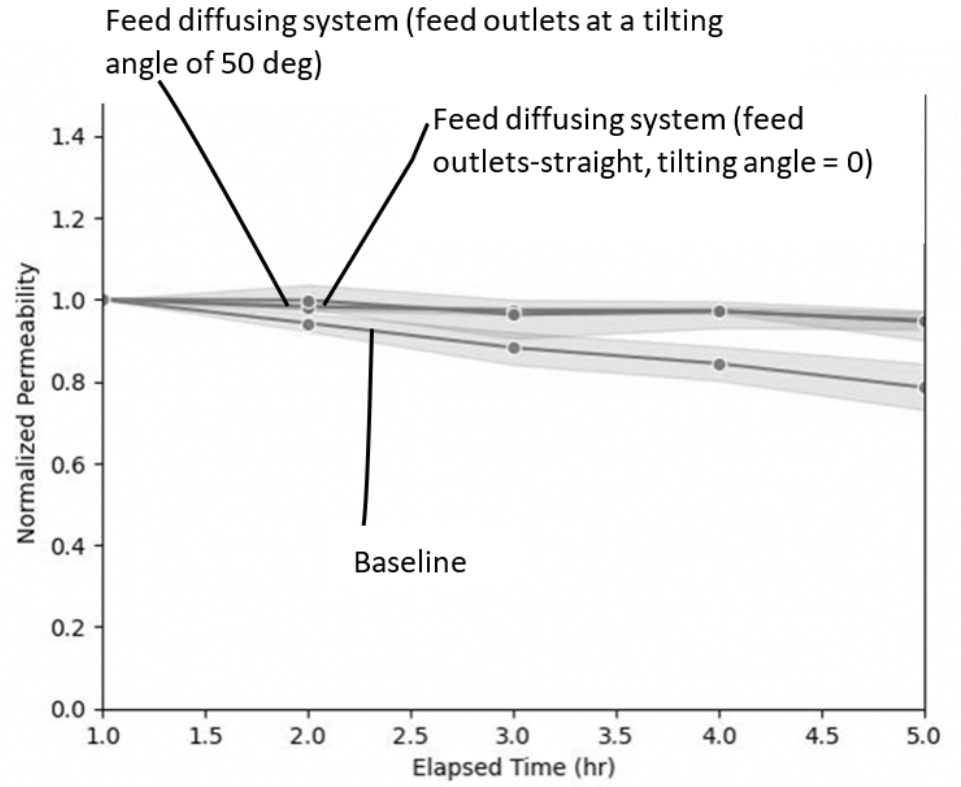
Feed diffusing system (feed outlets at a tilting angle of 50 deg)
Feed diffusing system (feed outlets-straight, tilting angle = 0)
Baseline
Normalized Permeability
1.4
1.2
1.0
0.8
0.6
0.4
0.2
0.0
1.0
1.5
2.0
2.5
3.0
3.5
4.0
4.5
5.0
Elapsed Time (hr)

FIG. 13

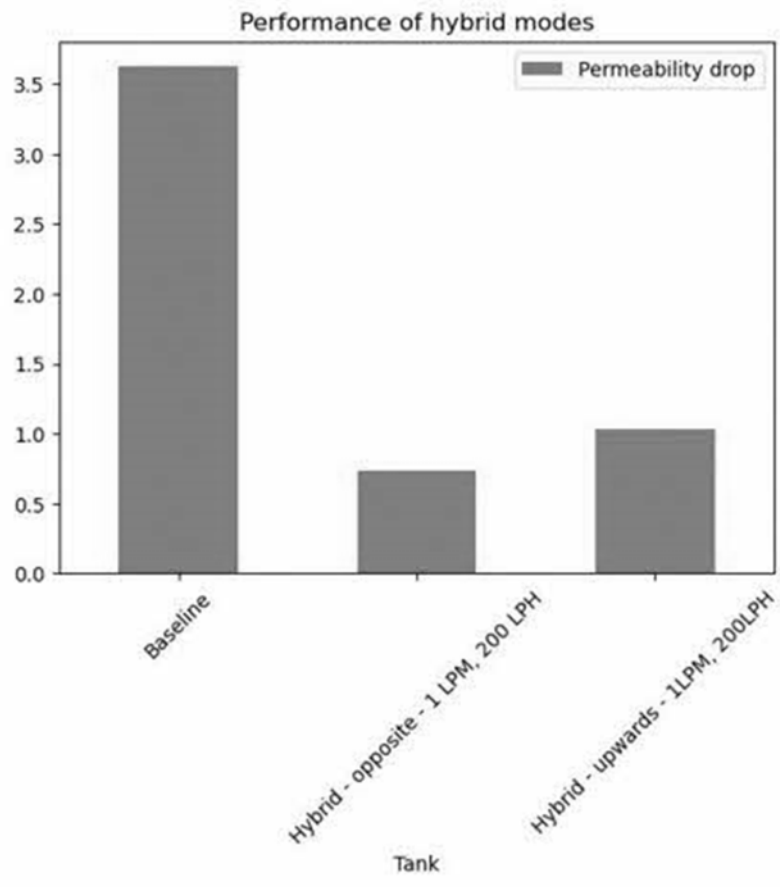
Performance of hybrid modes
Permeability drop
3.5
3.0
2.5
2.0
1.5
1.0
0.5
0.0
Baseline
Hybrid - opposite - 1 LPM, 200 LPH
Hybrid - upwards - 1LPM, 200LPH
Tank

FIG. 16

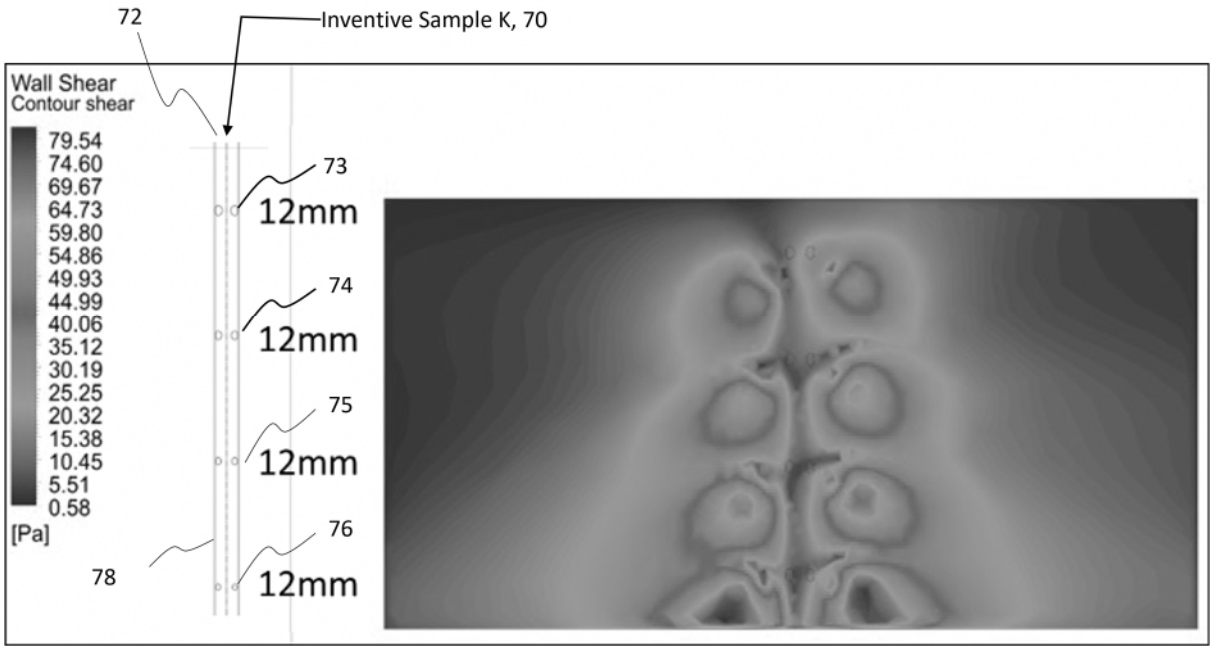
72
Inventive Sample K, 70
Wall Shear
Contour shear
79.54
74.60
69.67
64.73
59.80
54.86
49.93
44.99
40.06
35.12
30.19
25.25
20.32
15.38
10.45
5.51
0.58
[Pa]
73
12mm
74
12mm
75
12mm
76
12mm
78

FIG. 17

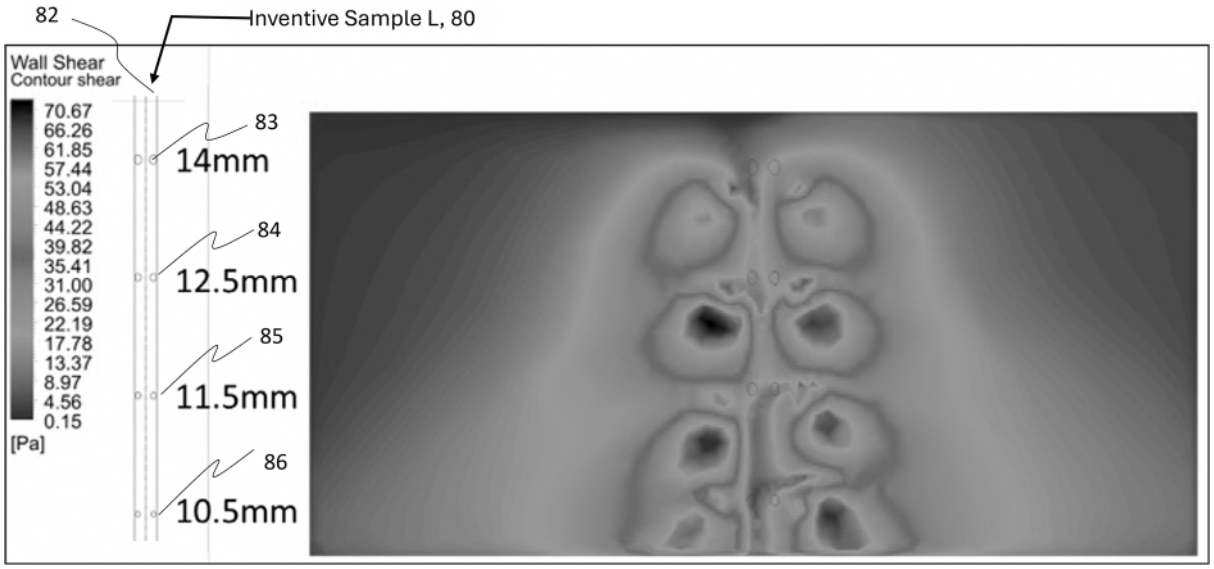
82
Inventive Sample L, 80
Wall Shear
Contour shear
70.67
66.26
61.85
57.44
53.04
48.63
44.22
39.82
35.41
31.00
26.59
22.19
17.78
13.37
8.97
4.56
0.15
[Pa]
83
14mm
84
12.5mm
85
11.5mm
86
10.5mm

FIG. 18

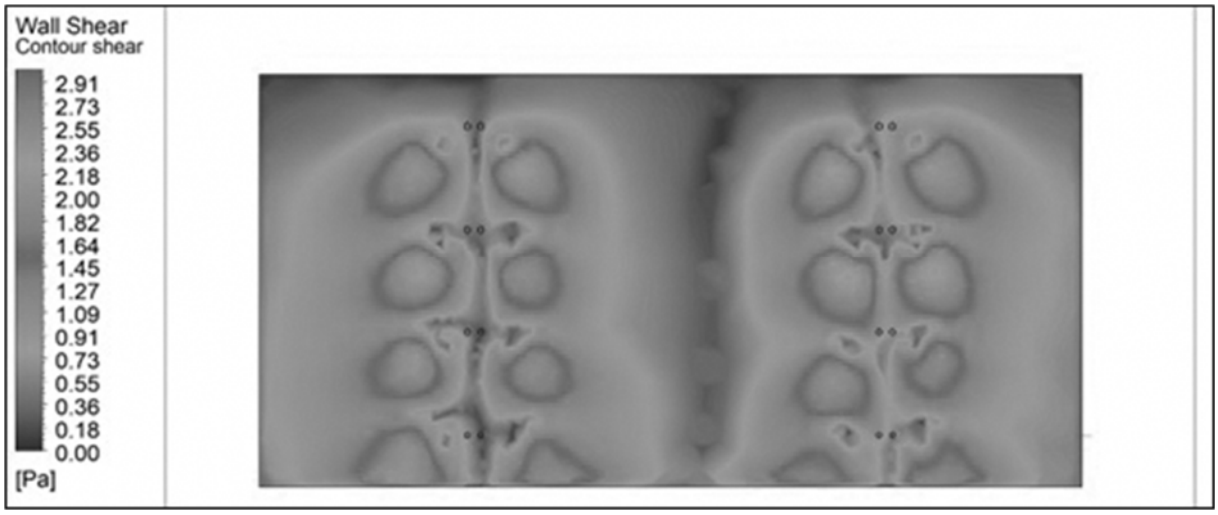
Wall Shear
Contour shear
2.91
2.73
2.55
2.36
2.18
2.00
1.82
1.64
1.45
1.27
1.09
0.91
0.73
0.55
0.36
0.18
0.00
[Pa]

FIG. 19