9702174 - 5
RTMP
copy +
IPER +
Annexes

PCT

WORLD INTELLECTUAL PROPERTY ORGANIZATION
International Bureau

INTERNATIONAL APPLICATION PUBLISHED UNDER THE PATENT COOPERATION TREATY (PCT)

(51) International Patent Classification 6 : A47B 88/04, 95/02, H01R 13/62

A1

(11) International Publication Number: WO 96/16575

(43) International Publication Date: 6 June 1996 (06.06.96)

(21) International Application Number: PCT/US95/15443

(22) International Filing Date: 28 November 1995 (28.11.95)

(30) Priority Data:
08/346,039 29 November 1994 (29.11.94) US

(71) Applicant: INTEL CORPORATION [US/US]; 2200 Mission College Boulevard, Santa Clara, CA 95052 (US).

(72) Inventors: ELDRIDGE, Robert, A.; 16080 N.W. Edwards Court, Beaverton, OR 97006 (US). UNREIN, Ed, J.; 5709 Charles Circle, Lake Oswego, OR 97035 (US). BROWN, David, L.; 7025 S.E. Furnberg Street, Milwaukee, OR 97222 (US). NOBLE, Scott, L.; 15545 S.W. Petrel Lane, Beaverton, OR 97007 (US).

(74) Agents: HO, Eric et al.; Blakely, Sokoloff, Taylor & Zafman, 7th floor, 12400 Wilshire Boulevard, Los Angeles, CA 90025-1026 (US).

(81) Designated States: AL, AM, AT, AT (Utility model), AU, BB, BG, BR, BY, CA, CH, CN, CZ, CZ (Utility model), DE, DE (Utility model), DK, DK (Utility model), EE, EE (Utility model), ES, FI, FI (Utility model), GB, GE, HU, IS, JP, KE, KG, KP, KR, KZ, LK, LR, LS, LT, LU, LV, MD, MG, MK, MN, MW, MX, NO, NZ, PL, PT, RO, RU, SD, SE, SG, SI, SK, SK (Utility model), TJ, TM, TT, UA, UG, UZ, VN, European patent (AT, BE, CH, DE, DK, ES, FR, GB, GR, IE, IT, LU, MC, NL, PT, SE), OAPI patent (BF, BJ, CF, CG, CI, CM, GA, GN, ML, MR, NE, SN, TD, TG), ARIPO patent (KE, LS, MW, SD, SZ, UG).

Published
With international search report.

(54) Title: PORTABLE DISK DRIVE CARRIER AND CHASSIS

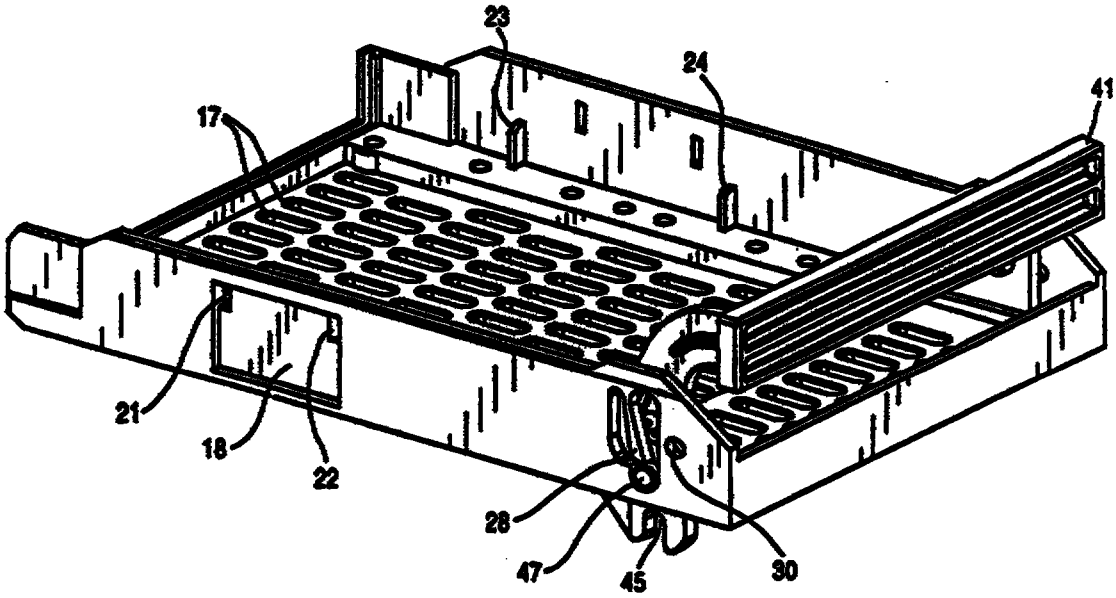

(57) Abstract

A hard disk drive carrier that is inexpensive to manufacture and suitable for use with hot plug connected hard disk drives. A composite ventilated bay (10) secures the disk drive while an interlocking handle mechanism (40) provides the carrying functionality for the hard disk drive carrier as well as the hardware for one-hand locking and unlocking of the carrier within a hard disk drive chassis (60).