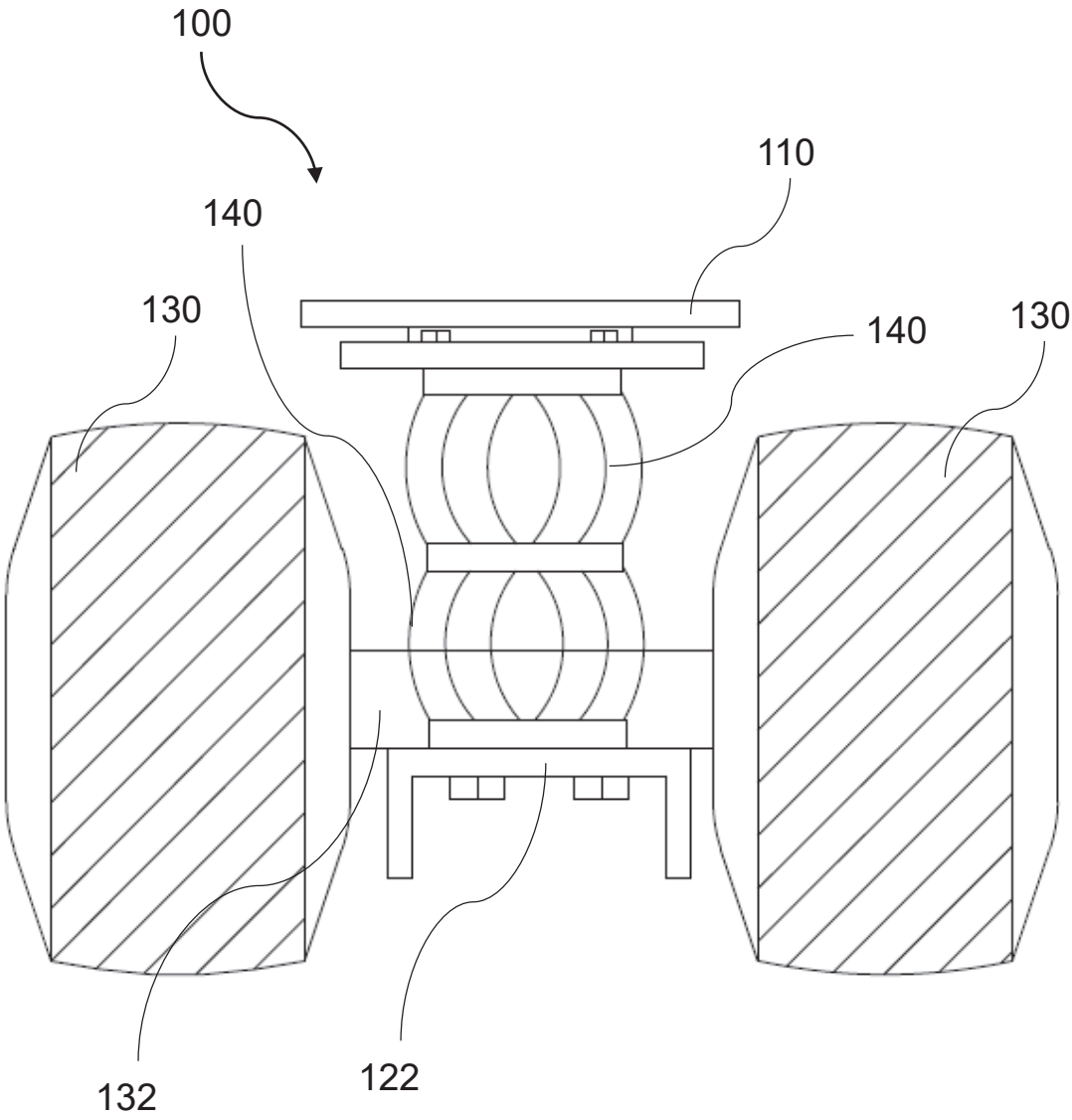

FIG. 1A

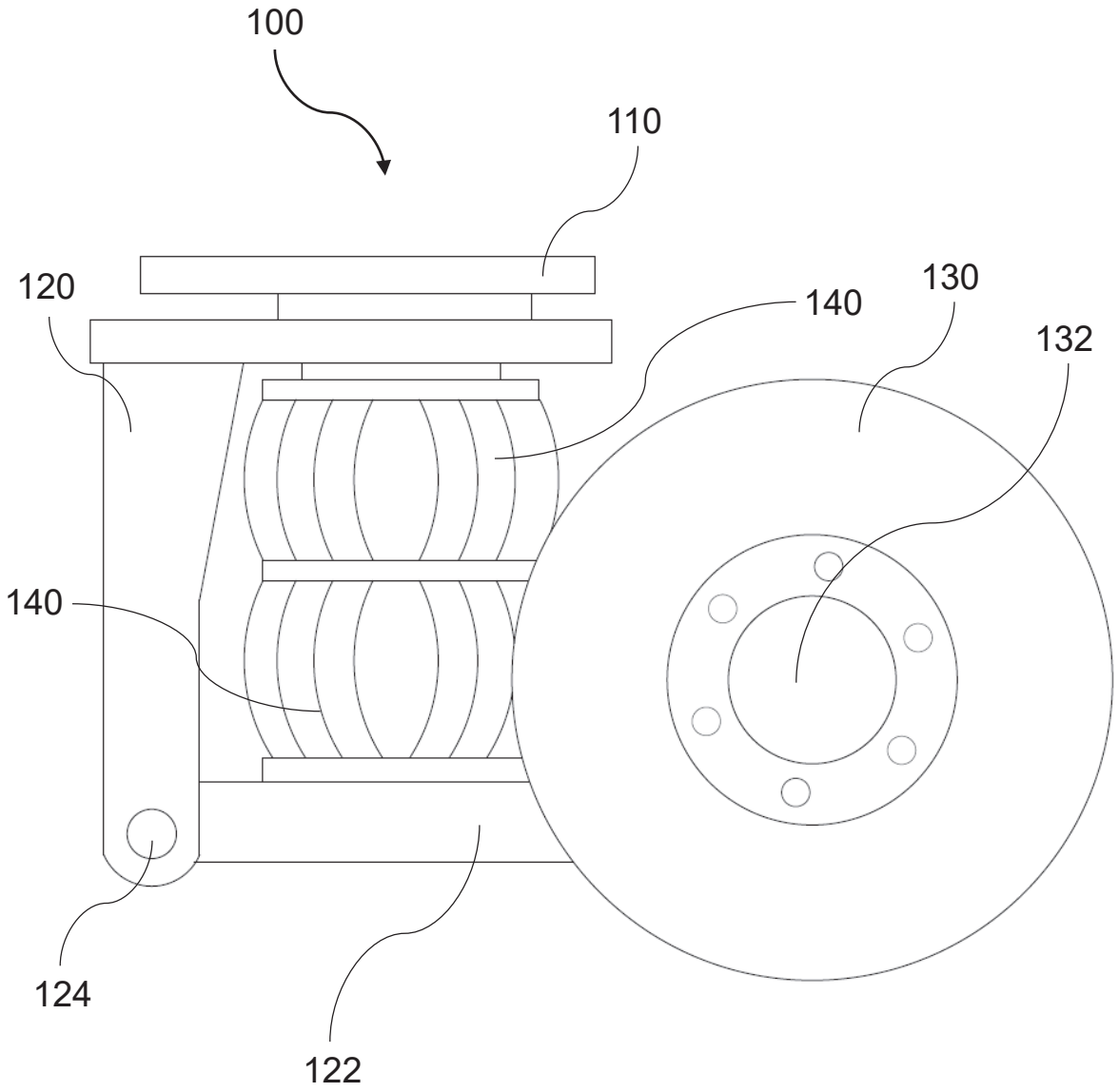

FIG. 1B

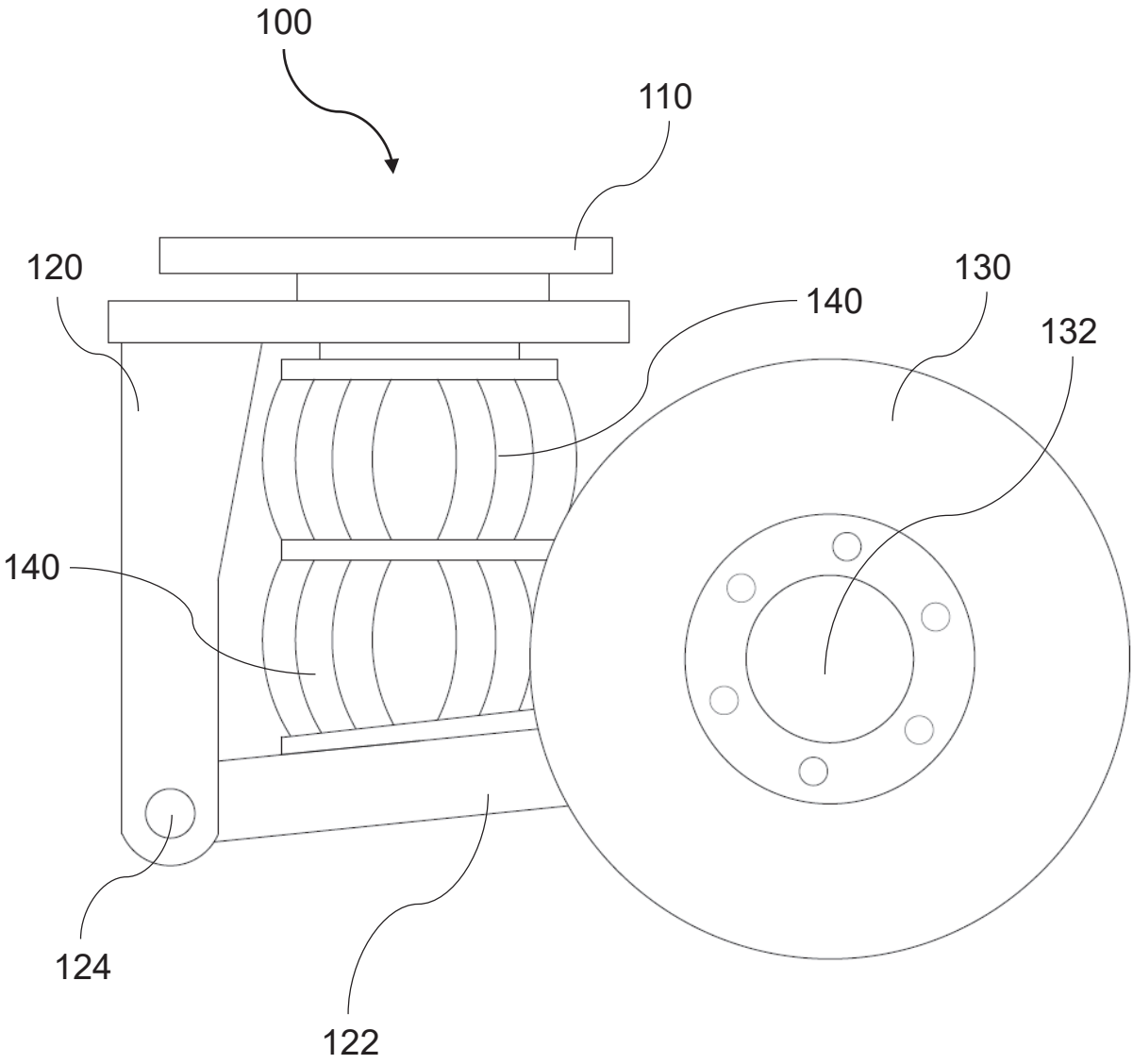

FIG. 1C

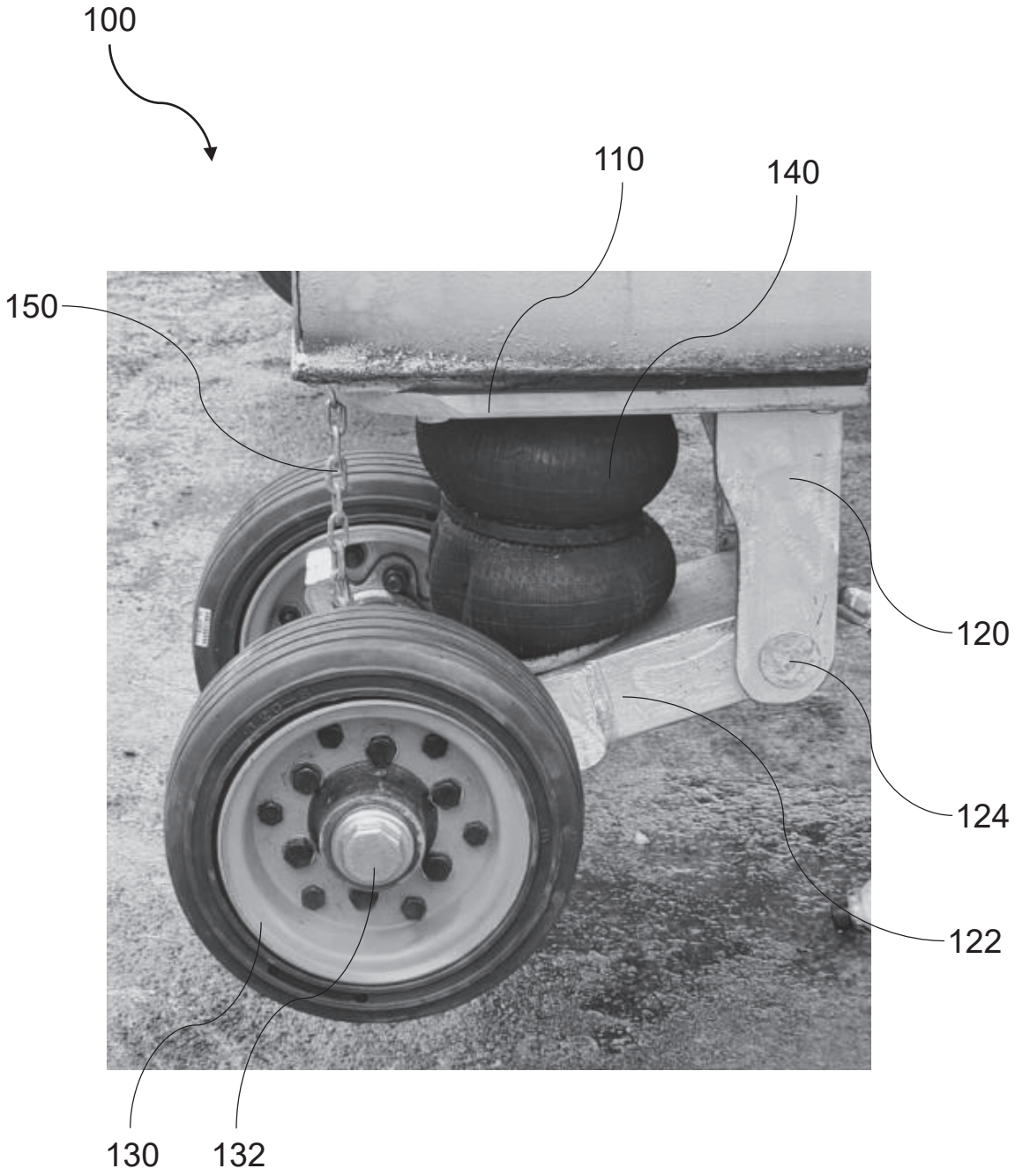

FIG. 2A

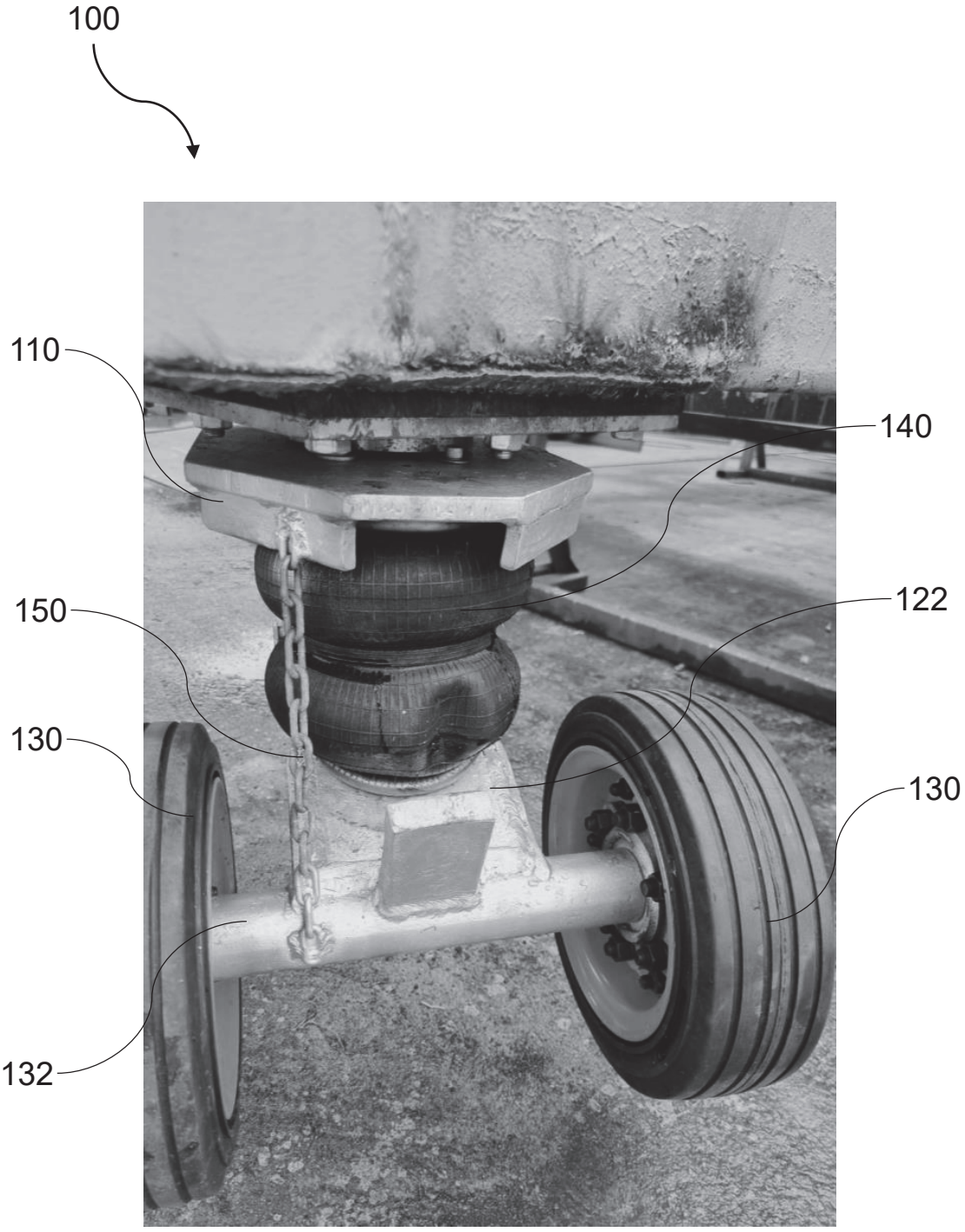

FIG. 2B

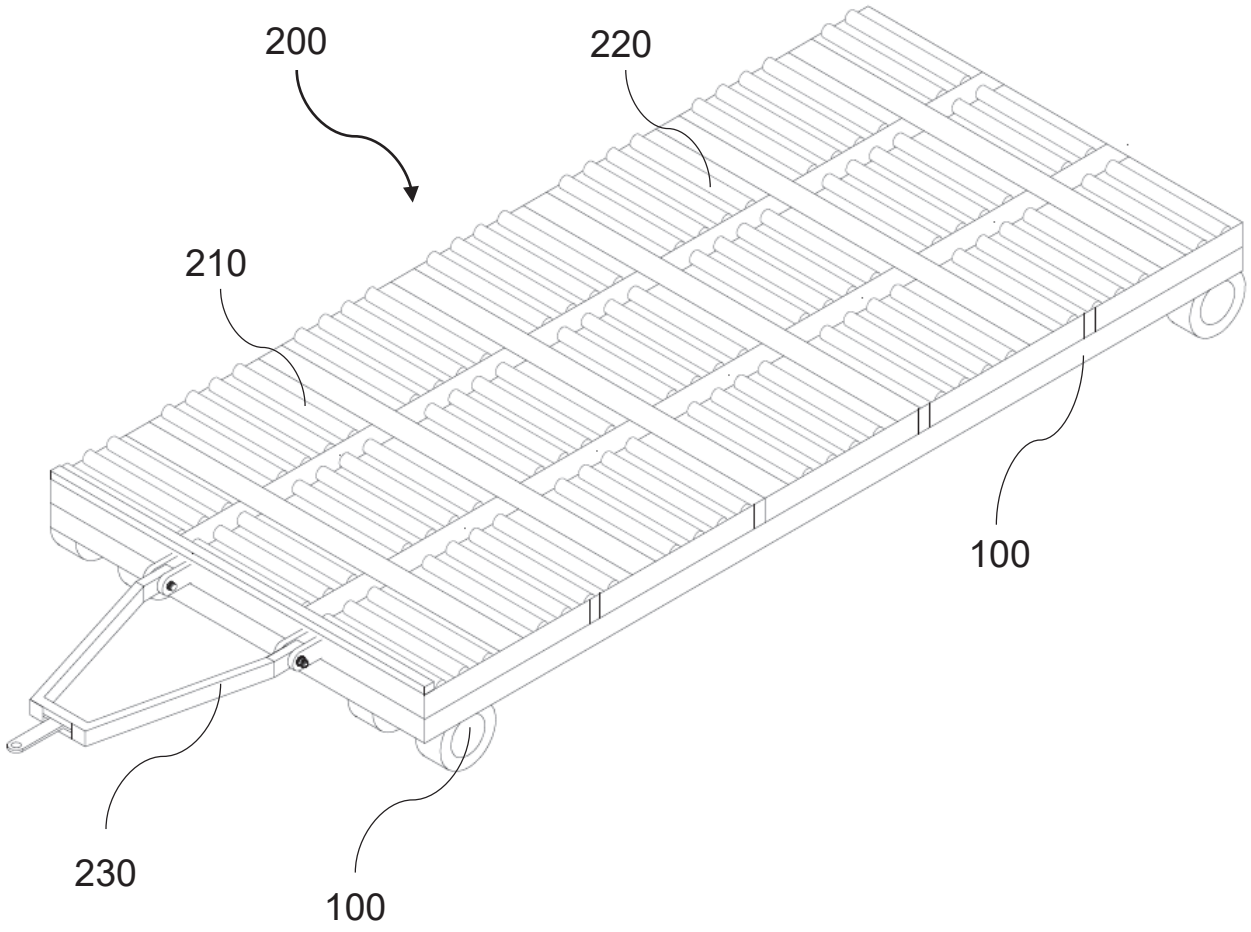

FIG. 3A

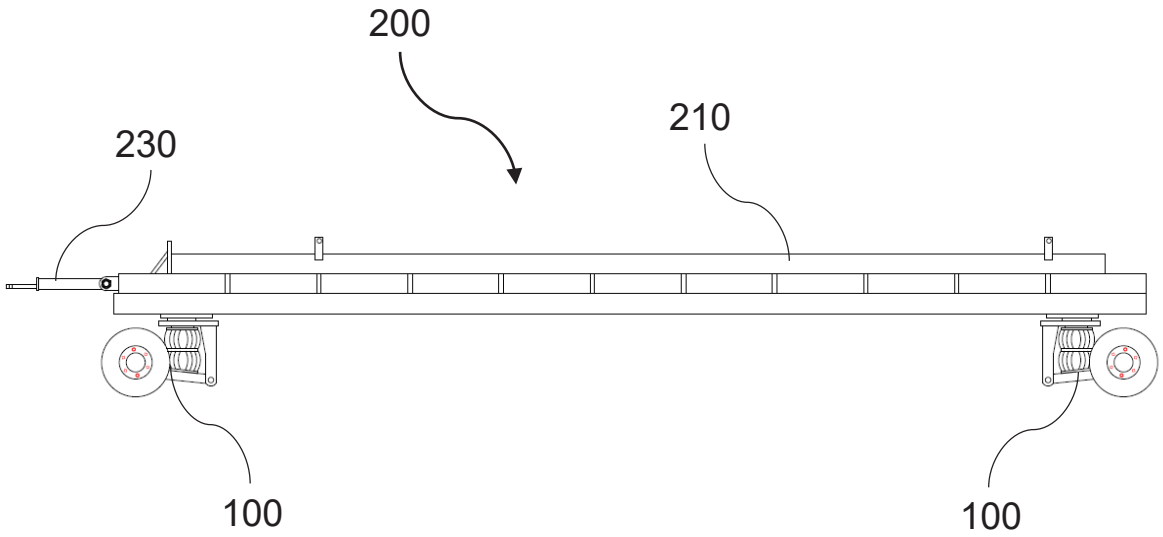

FIG. 3B

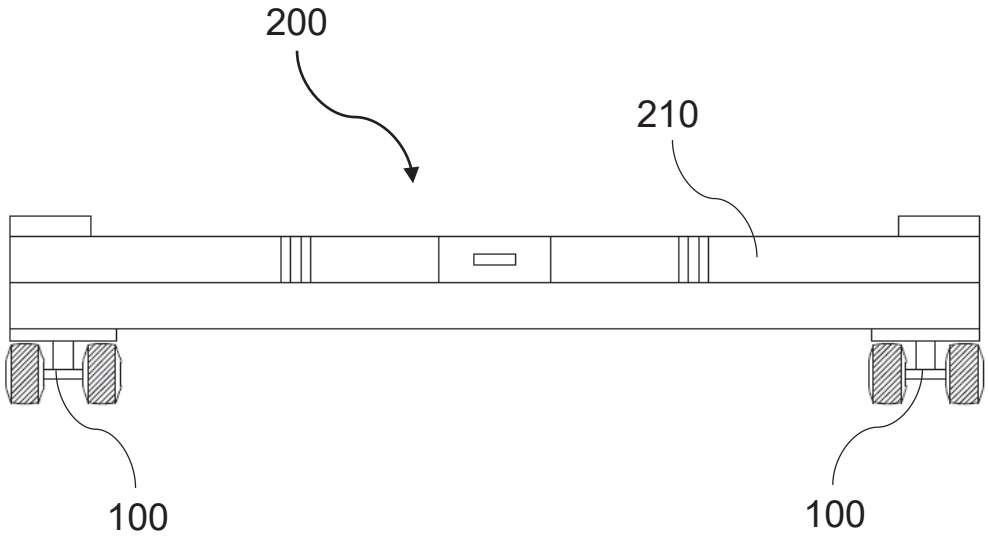

FIG. 3C

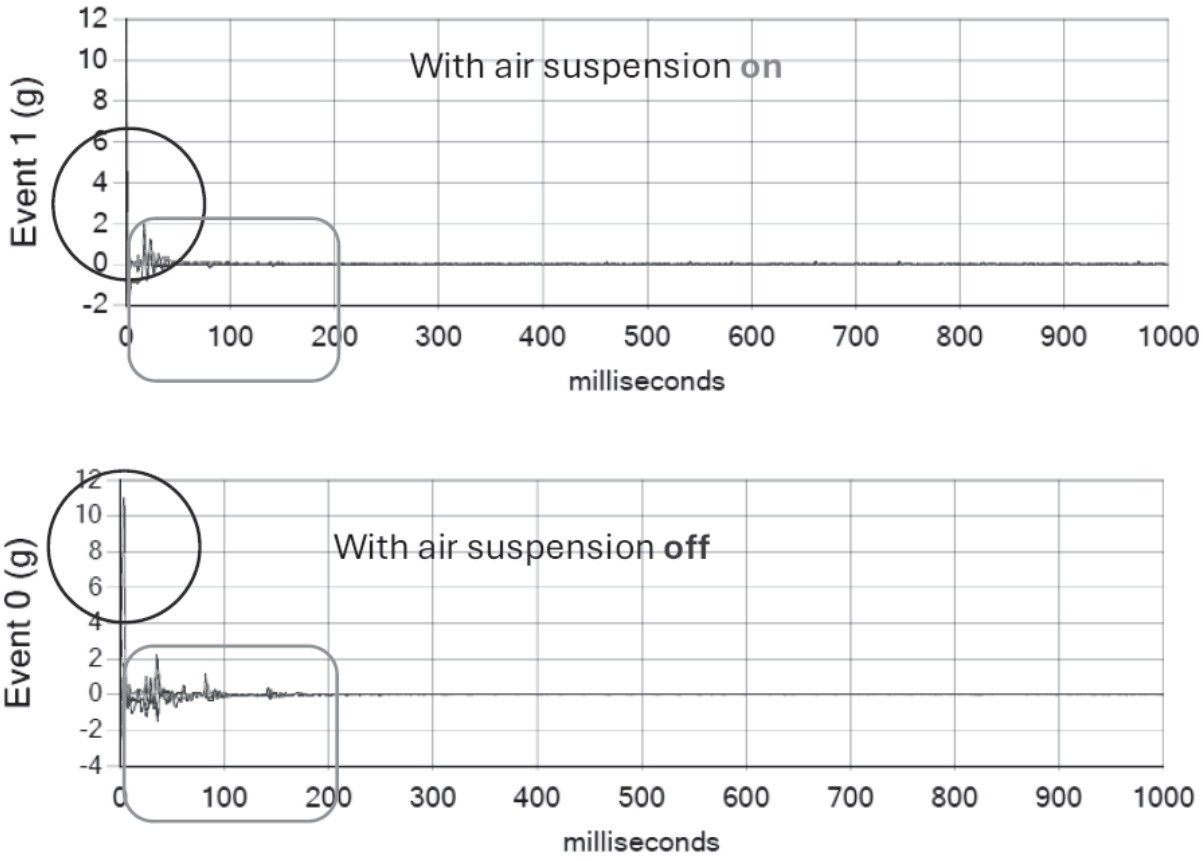
With air suspension on
Event 1 (g)
12
10
8
6
4
2
0
-2
0
100
200
300
400
500
600
700
800
900
1000
milliseconds
With air suspension off
Event 0 (g)
12
10
8
6
4
2
0
-2
-4
0
100
200
300
400
500
600
700
800
900
1000
milliseconds

FIG. 4