Fig. 1

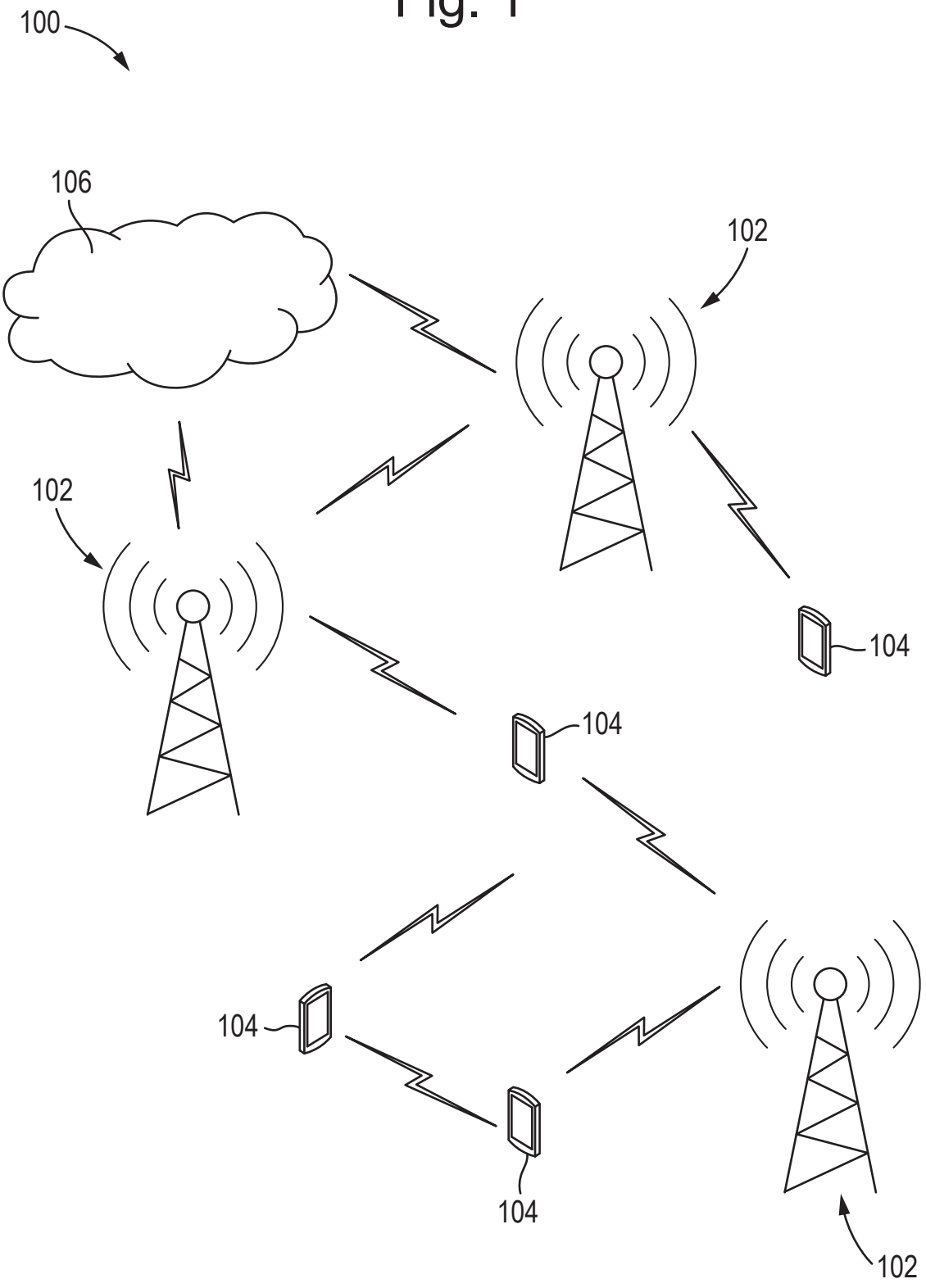

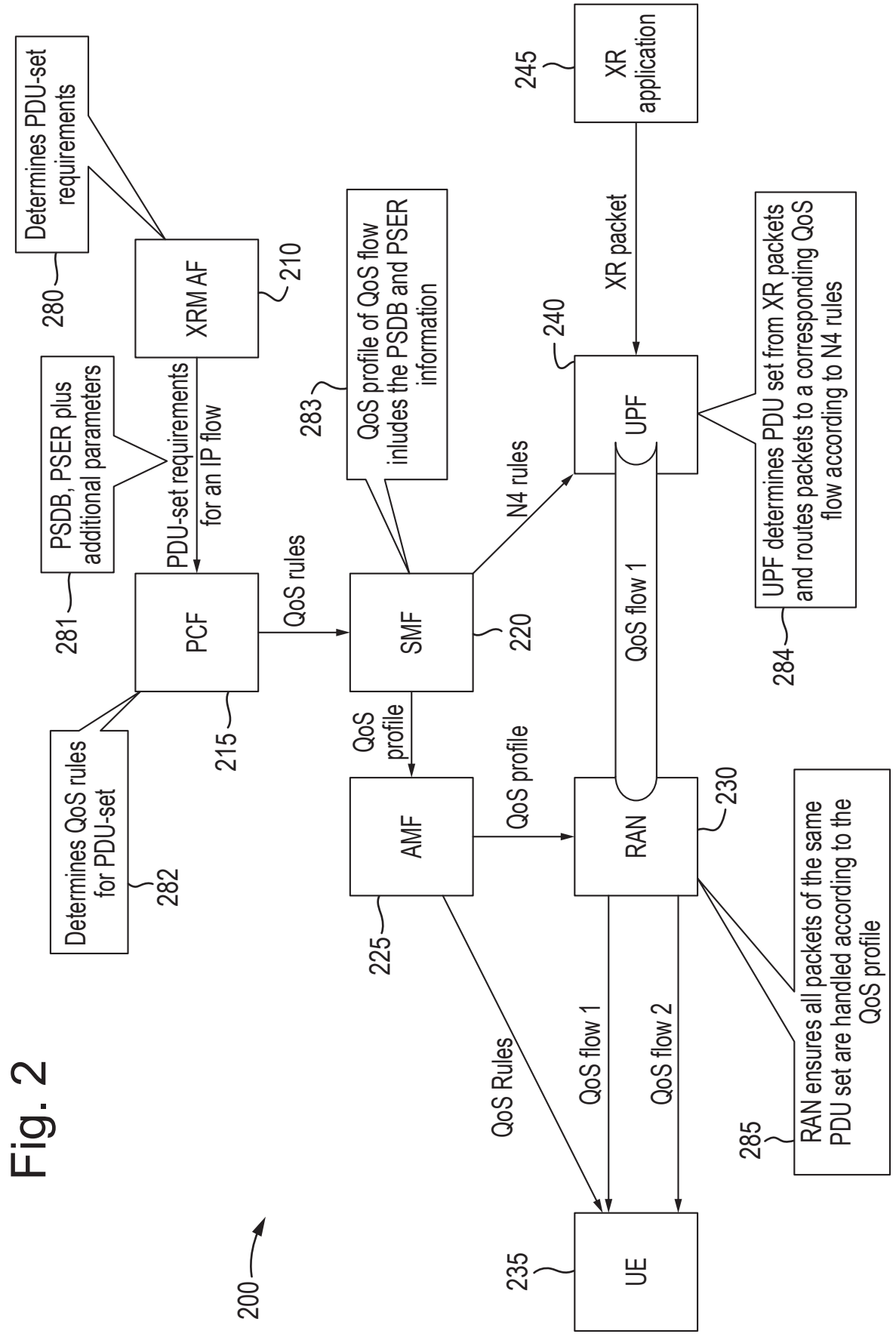
Determines PDU-set requirements
280
XRM AF
210
245
XR application
PSDB, PSER plus additional parameters
281
PDU-set requirements for an IP flow
283
QoS profile of QoS flow inludes the PSDB and PSER information
XR packet
240
UPF
UPF determines PDU set from XR packets and routes packets to a corresponding QoS flow according to N4 rules
284
PCF
QoS rules
SMF
220
N4 rules
QoS flow 1
Determines QoS rules for PDU-set
282
215
QoS profile
AMF
QoS profile
RAN
230
225
QoS Rules
QoS flow 1
QoS flow 2
RAN ensures all packets of the same PDU set are handled according to the QoS profile
285
UE
235
200

Fig. 2

Fig. 3

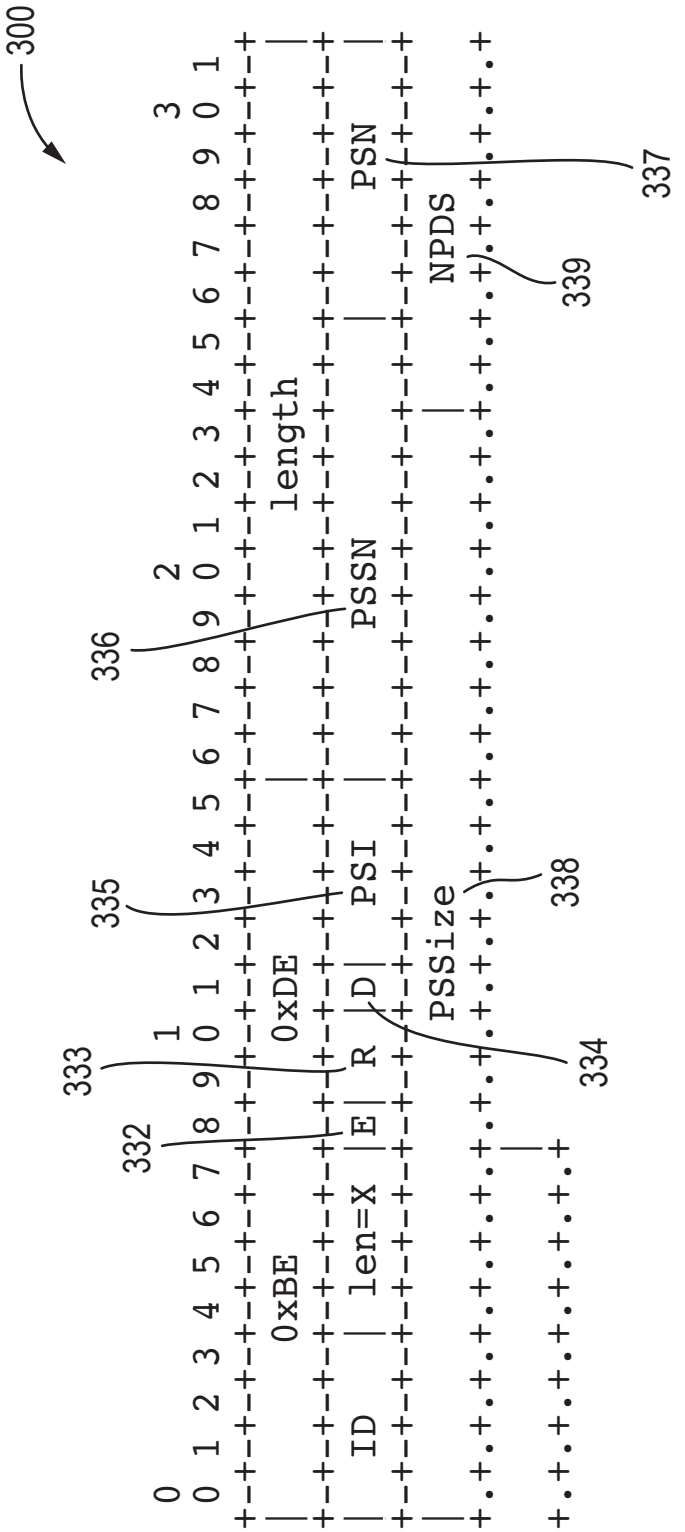
300
0 1 2 3
0 1 2 3 4 5 6 7 8 9 0 1 2 3 4 5 6 7 8 9 0 1 2 3 4 5 6 7 8 9 0 1
0xBE
ID
len=X
E
R
D
PSI
0xDE
PSSN
length
PSSize
NPDS
PSN
332
333
334
335
336
337
338
339

Fig. 4

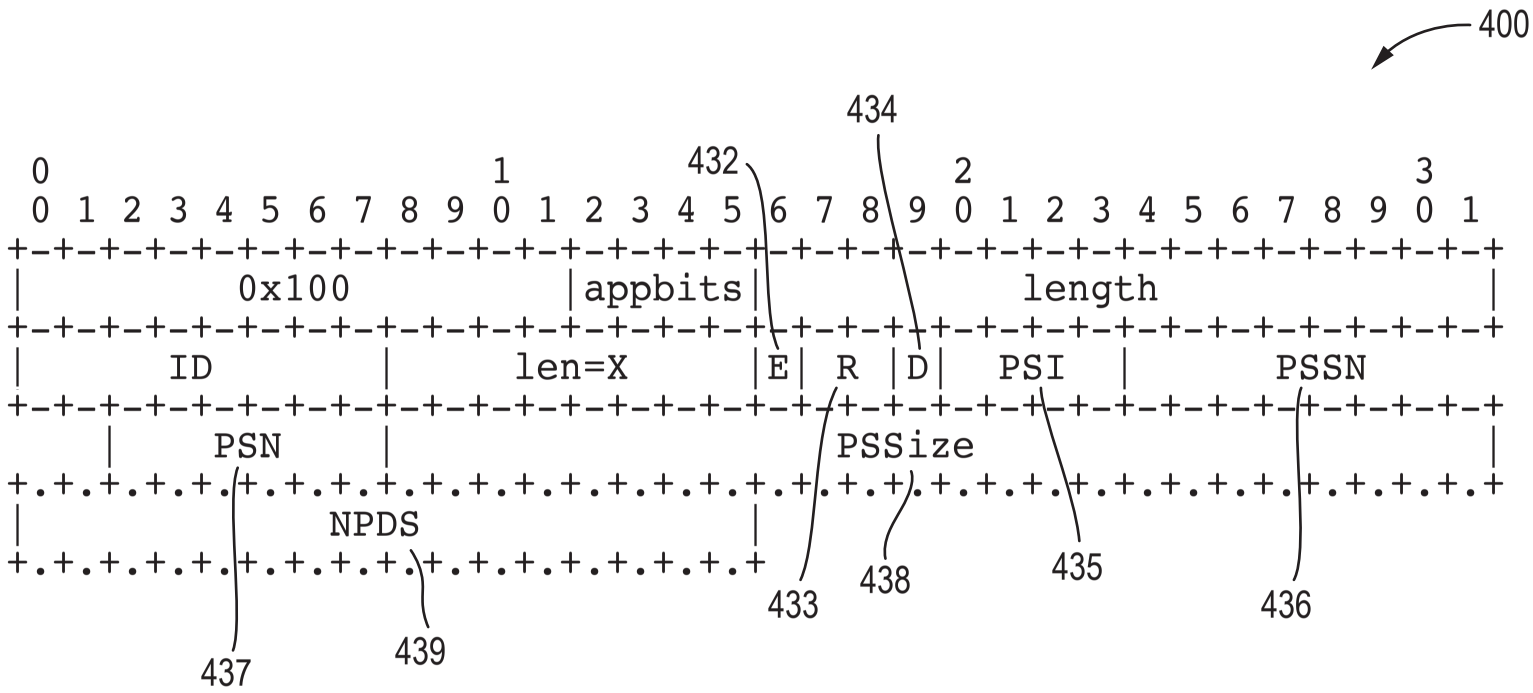
400
434
432
0 1 2 3 4 5 6 7 8 9 0 1 2 3 4 5 6 7 8 9 0 1 2 3 4 5 6 7 8 9 0 1
0x100
appbits
length
ID
len=X
E
R
D
PSI
PSSN
PSN
PSSize
NPDS
433
438
435
436
437
439

Fig. 5a

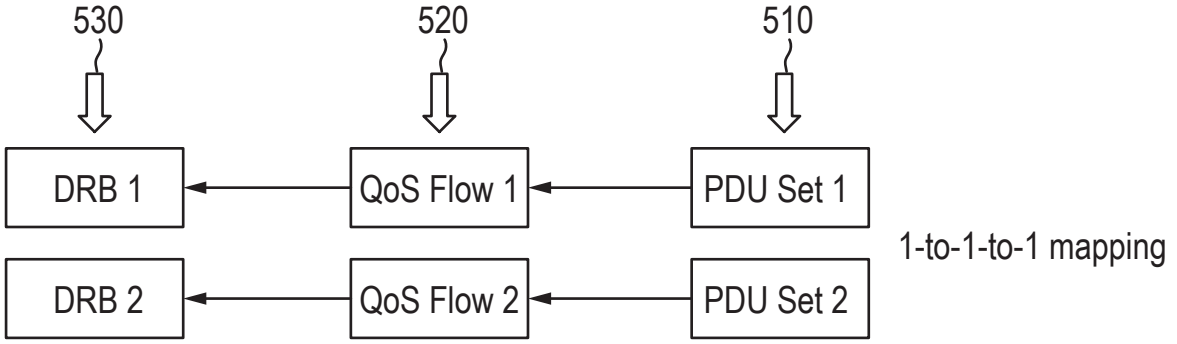

Fig. 5b

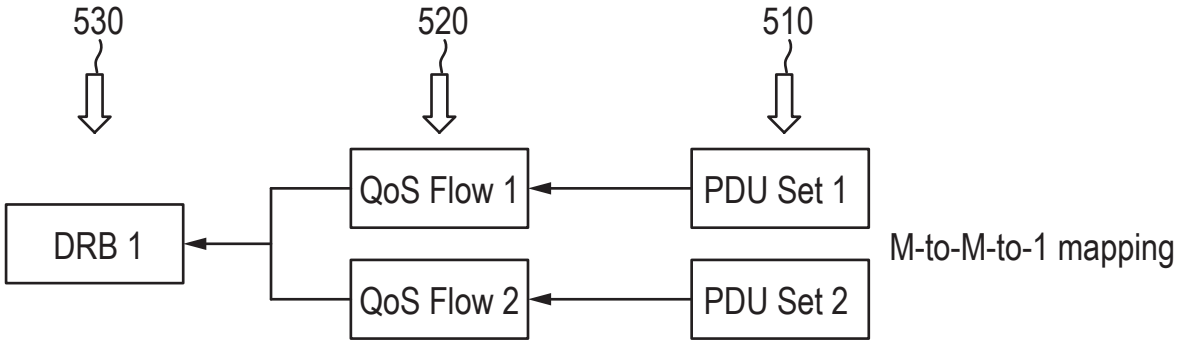

Fig. 5c

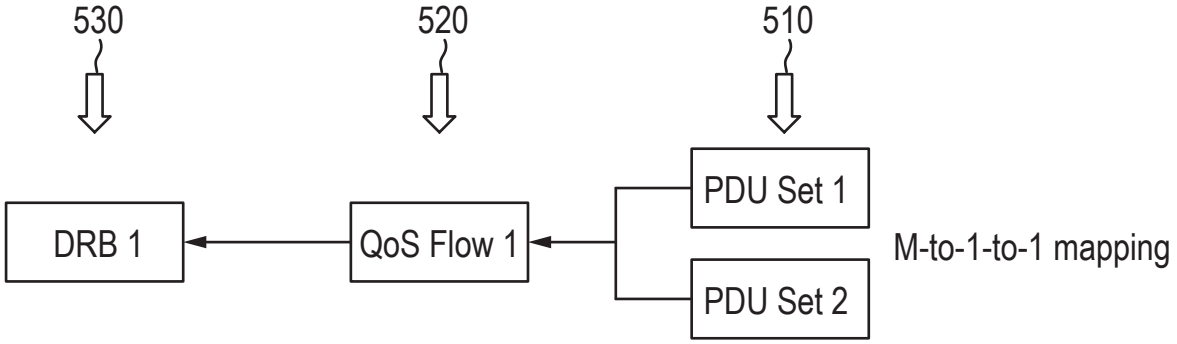

Fig. 5d

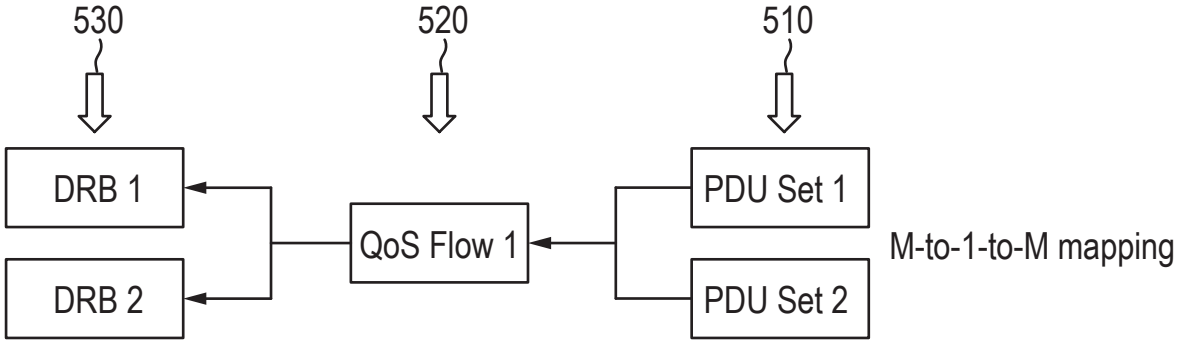

Fig. 6

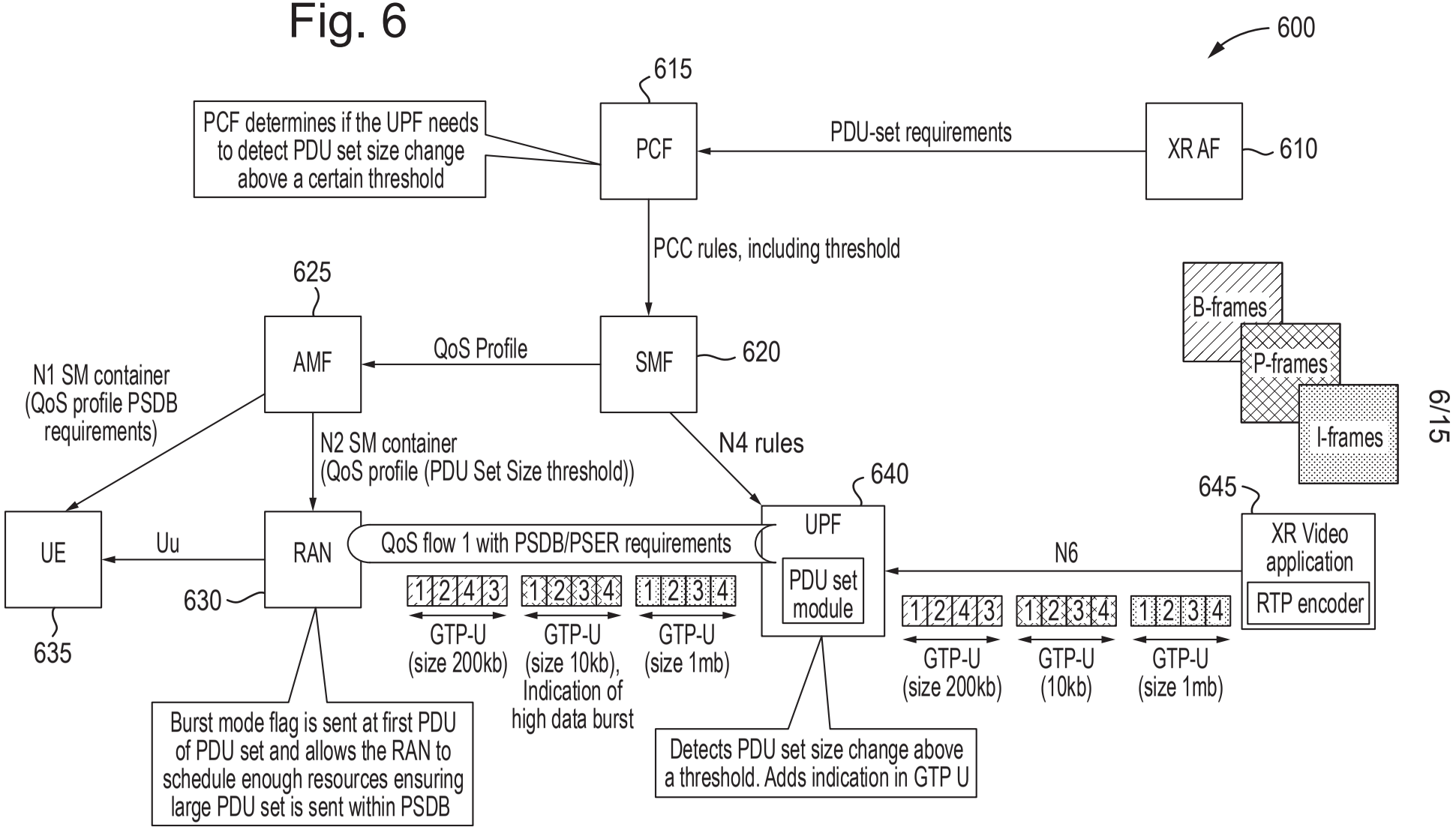
600
615
PCF determines if the UPF needs to detect PDU set size change above a certain threshold
PCF
PDU-set requirements
XR AF
610
PCC rules, including threshold
625
AMF
QoS Profile
SMF
620
B-frames
P-frames
I-frames
N1 SM container (QoS profile PSDB requirements)
N2 SM container (QoS profile (PDU Set Size threshold))
N4 rules
640
645
UE
Uu
RAN
QoS flow 1 with PSDB/PSER requirements
UPF
PDU set module
N6
XR Video application
RTP encoder
630
635
1 2 4 3
1 2 3 4
1 2 3 4
GTP-U (size 200kb)
GTP-U (size 10kb), Indication of high data burst
GTP-U (size 1mb)
1 2 4 3
1 2 3 4
1 2 3 4
GTP-U (size 200kb)
GTP-U (10kb)
GTP-U (size 1mb)
Burst mode flag is sent at first PDU of PDU set and allows the RAN to schedule enough resources ensuring large PDU set is sent within PSDB
Detects PDU set size change above a threshold. Adds indication in GTP U

Fig. 7

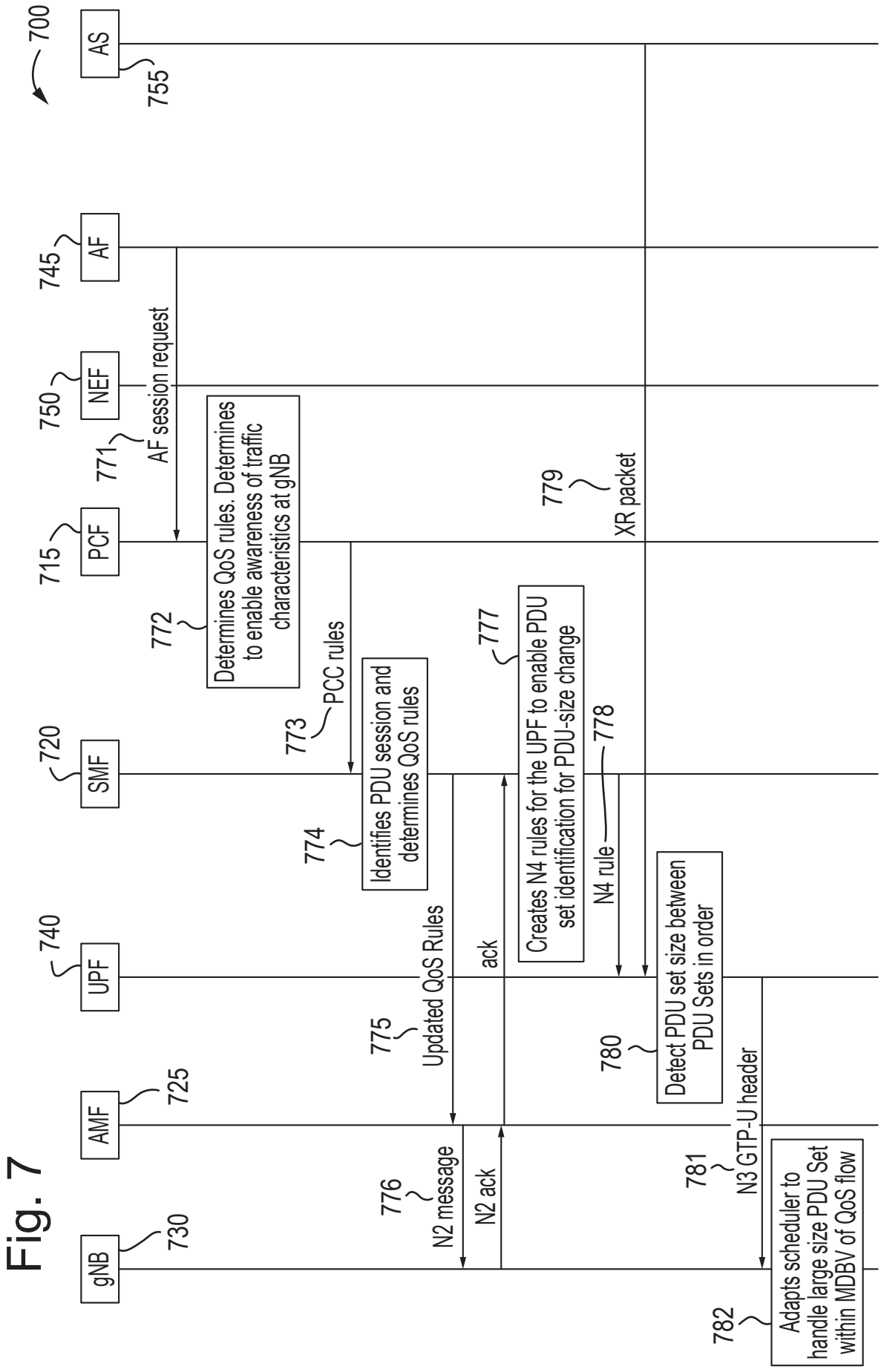
700
AS
755
AF
745
NEF
750
PCF
715
SMF
720
UPF
740
AMF
725
gNB
730
AF session request
771
Determines QoS rules. Determines to enable awareness of traffic characteristics at gNB
772
PCC rules
773
Identifies PDU session and determines QoS rules
774
Updated QoS Rules
775
N2 message
776
N2 ack
ack
Creates N4 rules for the UPF to enable PDU set identification for PDU-size change
777
N4 rule
778
XR packet
779
Detect PDU set size between PDU Sets in order
780
N3 GTP-U header
781
Adapts scheduler to handle large size PDU Set within MDBV of QoS flow
782

Fig. 8

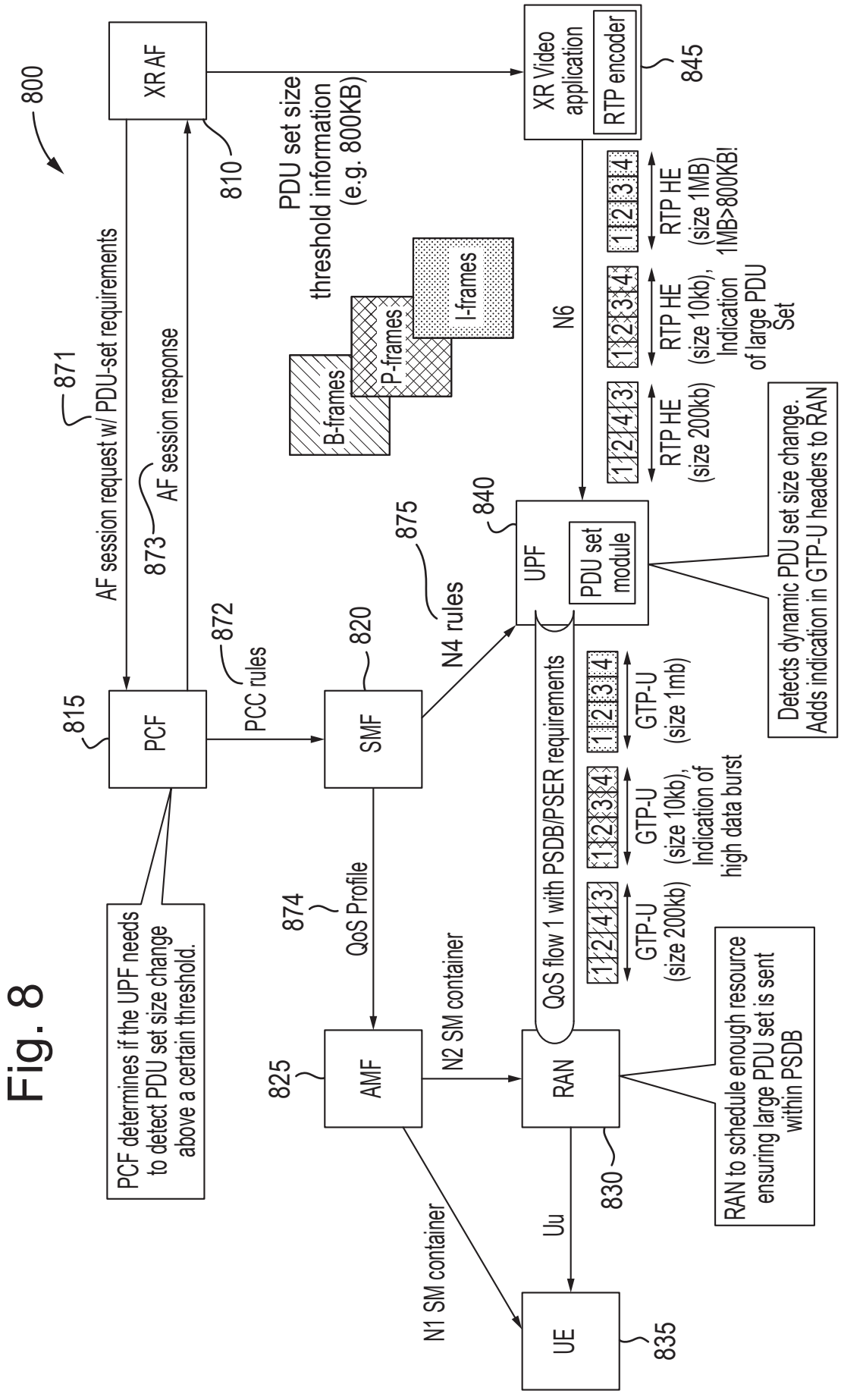
800
XR AF
810
PDU set size threshold information (e.g. 800KB)
XR Video application
RTP encoder
845
871
AF session request w/ PDU-set requirements
873
AF session response
I-frames
P-frames
B-frames
N6
RTP HE (size 1MB) 1MB>800KB!
RTP HE (size 10kb), Indication of large PDU Set
RTP HE (size 200kb)
840
UPF
PDU set module
875
N4 rules
Detects dynamic PDU set size change. Adds indication in GTP-U headers to RAN
815
PCF
872
PCC rules
820
SMF
PCF determines if the UPF needs to detect PDU set size change above a certain threshold.
874
QoS Profile
QoS flow 1 with PSDB/PSER requirements
GTP-U (size 1mb)
GTP-U (size 10kb), Indication of high data burst
GTP-U (size 200kb)
825
AMF
N2 SM container
RAN
RAN to schedule enough resource ensuring large PDU set is sent within PSDB
830
Uu
N1 SM container
UE
835

Fig. 9

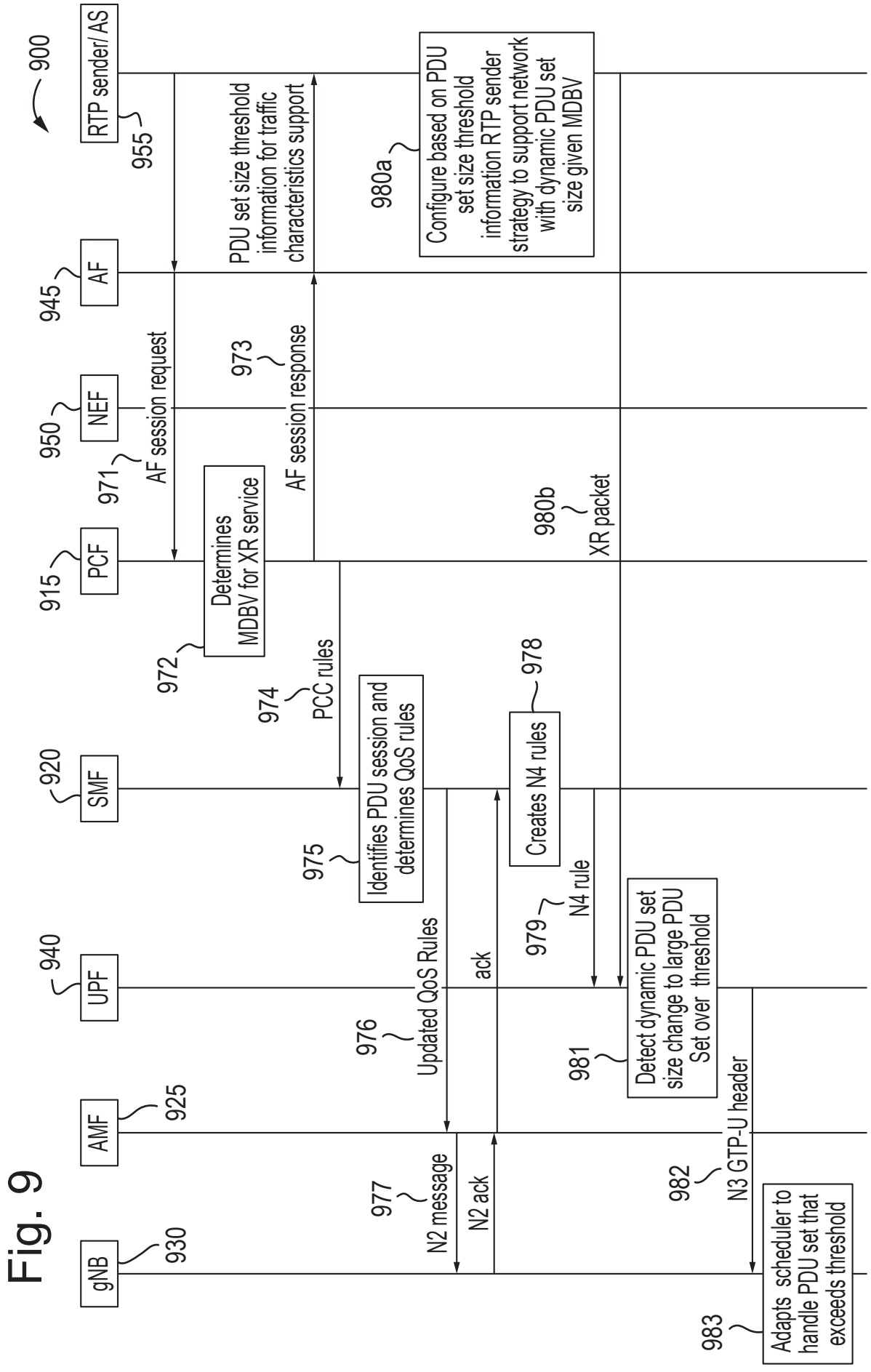
900
RTP sender/ AS
955
AF
945
NEF
950
PCF
915
SMF
920
UPF
940
AMF
925
gNB
930
AF session request
971
PDU set size threshold information for traffic characteristics support
973
AF session response
980a
Configure based on PDU set size threshold information RTP sender strategy to support network with dynamic PDU set size given MDBV
980b
XR packet
Determines MDBV for XR service
972
PCC rules
974
Identifies PDU session and determines QoS rules
975
Creates N4 rules
978
N4 rule
979
Updated QoS Rules
976
ack
Detect dynamic PDU set size change to large PDU Set over threshold
981
N2 message
977
N2 ack
N3 GTP-U header
982
Adapts scheduler to handle PDU set that exceeds threshold
983

Fig. 10

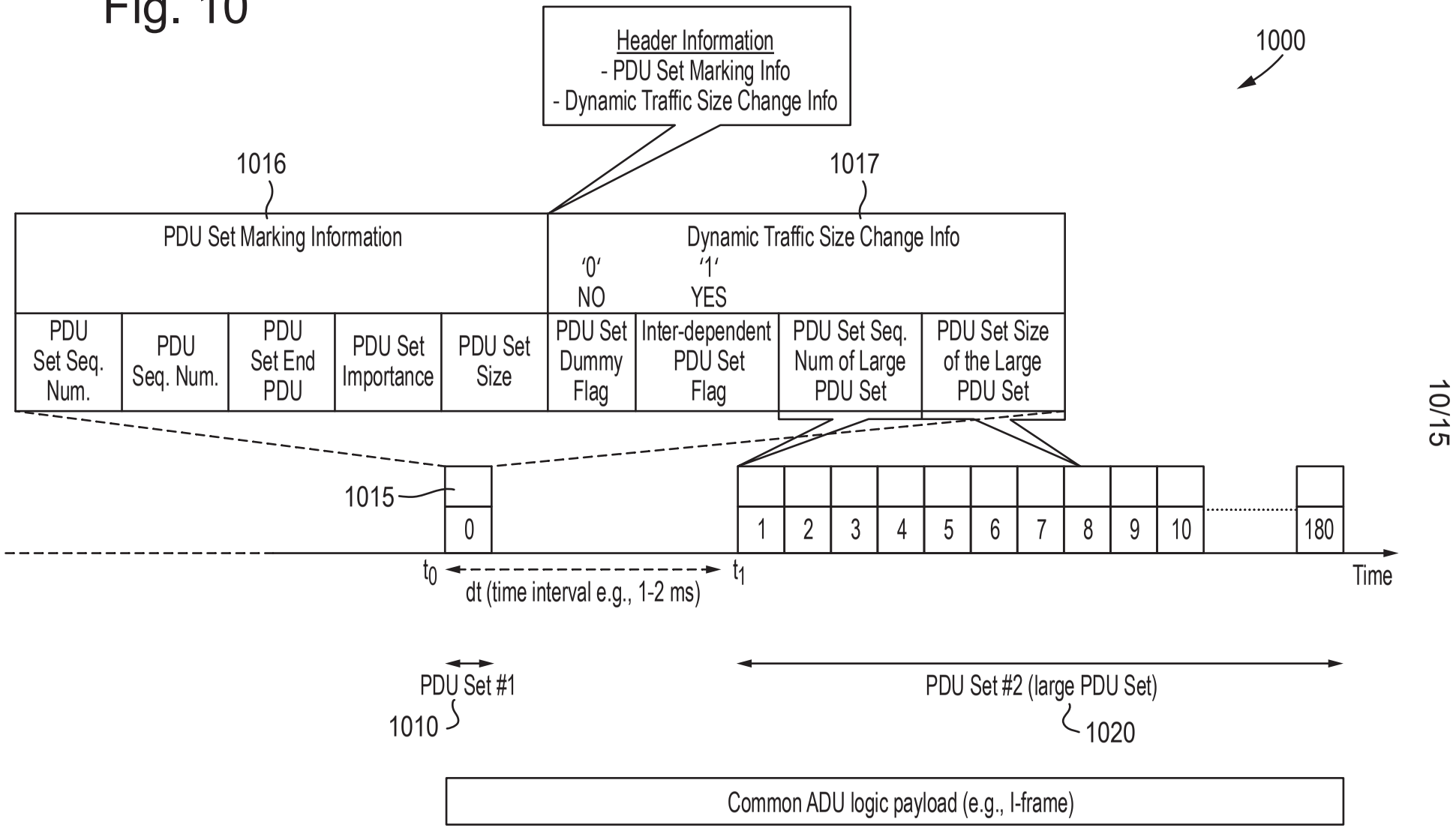
Header Information
- PDU Set Marking Info
- Dynamic Traffic Size Change Info
1000
1016
1017
PDU Set Marking Information
Dynamic Traffic Size Change Info
'0'
NO
'1'
YES
PDU Set Seq. Num.
PDU Seq. Num.
PDU Set End PDU
PDU Set Importance
PDU Set Size
PDU Set Dummy Flag
Inter-dependent PDU Set Flag
PDU Set Seq. Num of Large PDU Set
PDU Set Size of the Large PDU Set
1015
0
1
2
3
4
5
6
7
8
9
10
180
t_0
t_1
dt (time interval e.g., 1-2 ms)
Time
PDU Set #1
1010
PDU Set #2 (large PDU Set)
1020
Common ADU logic payload (e.g., I-frame)

Fig. 11

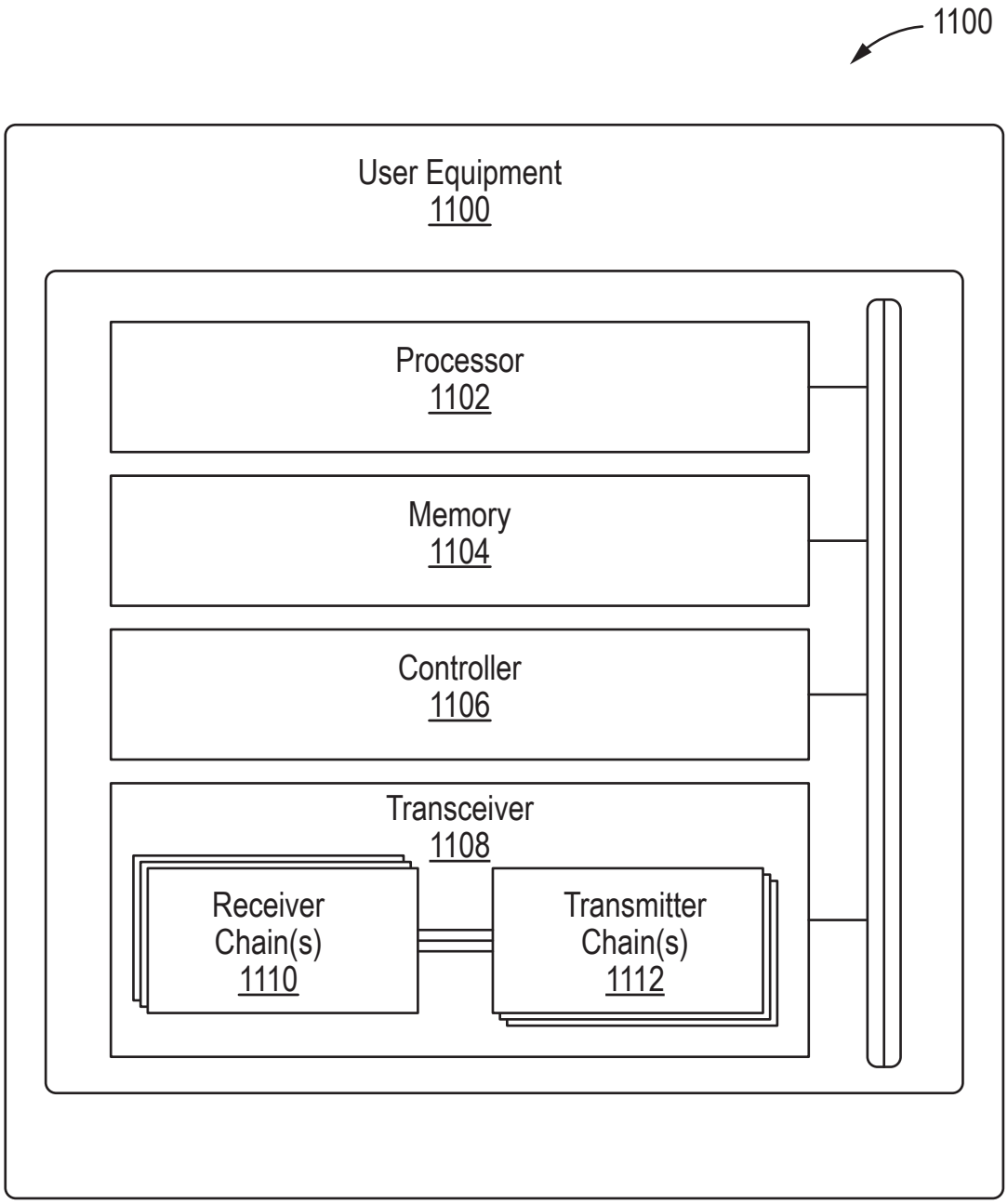
1100
User Equipment
1100
Processor
1102
Memory
1104
Controller
1106
Transceiver
1108
Receiver
Chain(s)
1110
Transmitter
Chain(s)
1112

Fig. 12

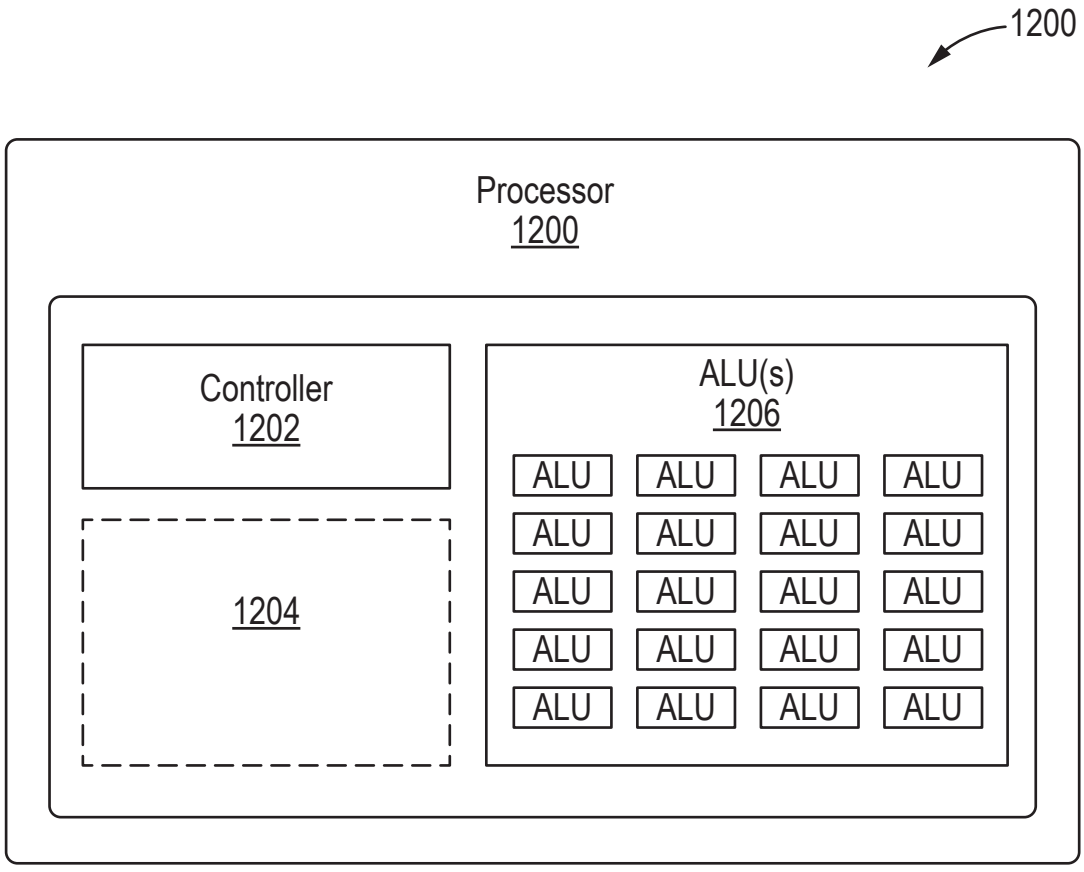
1200
Processor
1200
Controller
1202
1204
ALU(s)
1206
ALU
ALU
ALU
ALU
ALU
ALU
ALU
ALU
ALU
ALU
ALU
ALU
ALU
ALU
ALU
ALU
ALU
ALU
ALU
ALU

Fig. 13

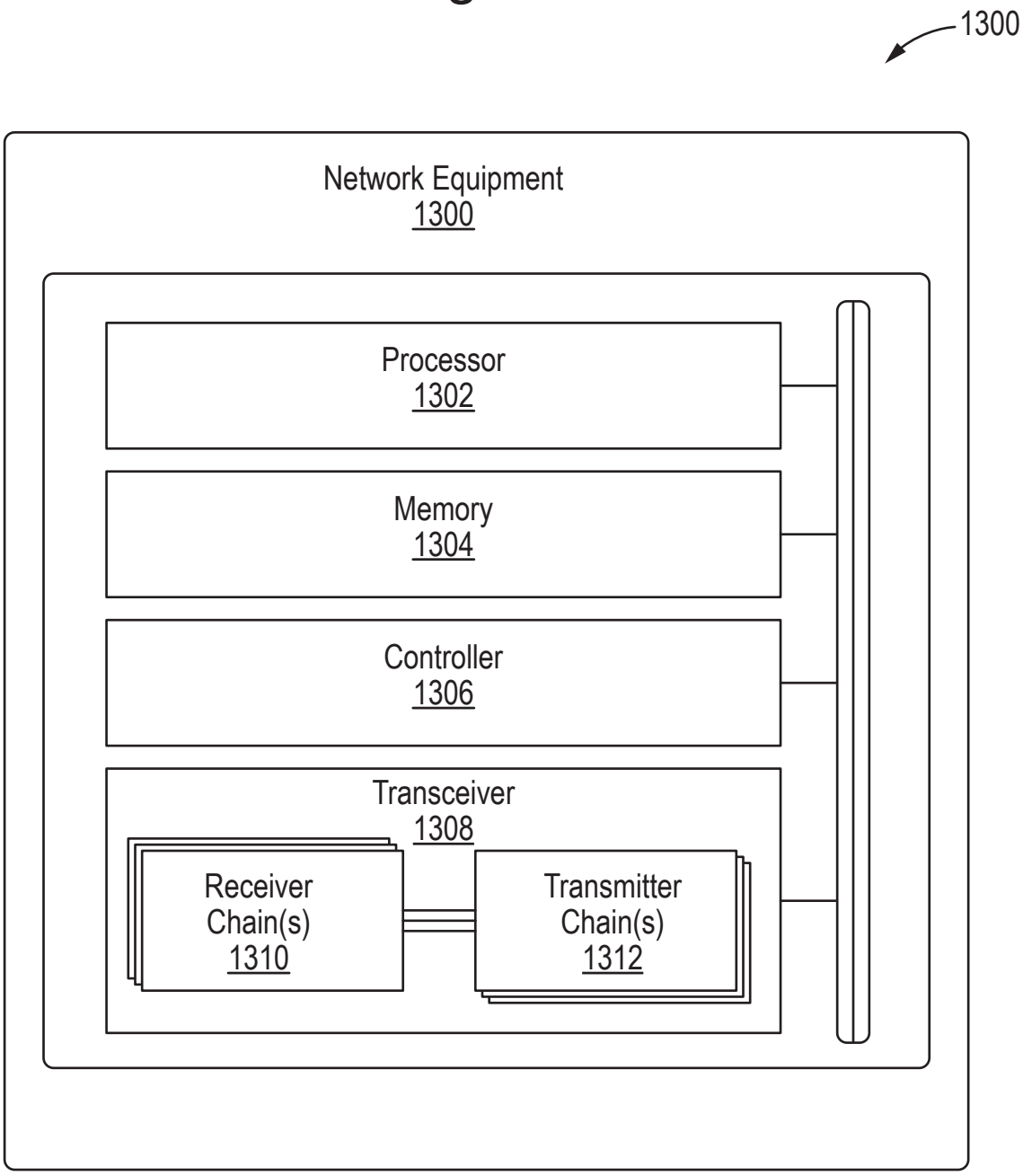
1300
Network Equipment
1300
Processor
1302
Memory
1304
Controller
1306
Transceiver
1308
Receiver
Chain(s)
1310
Transmitter
Chain(s)
1312

Fig. 14

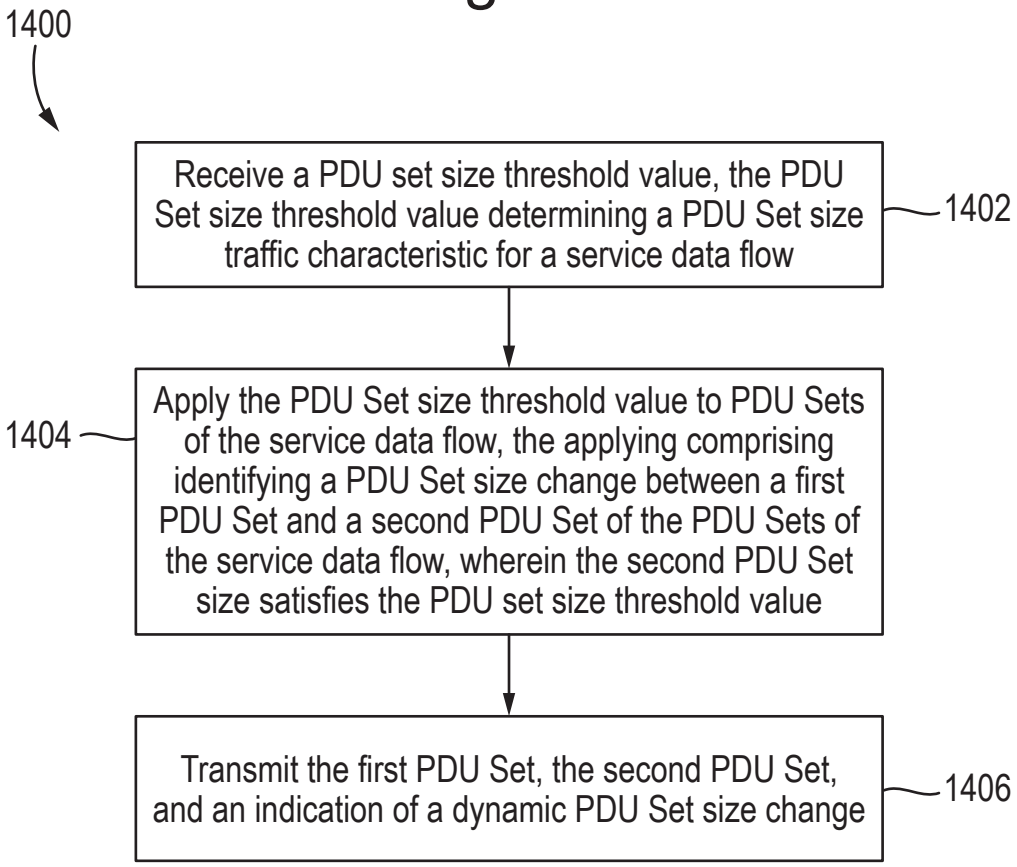
1400
Receive a PDU set size threshold value, the PDU Set size threshold value determining a PDU Set size traffic characteristic for a service data flow
1402
Apply the PDU Set size threshold value to PDU Sets of the service data flow, the applying comprising identifying a PDU Set size change between a first PDU Set and a second PDU Set of the PDU Sets of the service data flow, wherein the second PDU Set size satisfies the PDU set size threshold value
1404
Transmit the first PDU Set, the second PDU Set, and an indication of a dynamic PDU Set size change
1406

Fig. 15

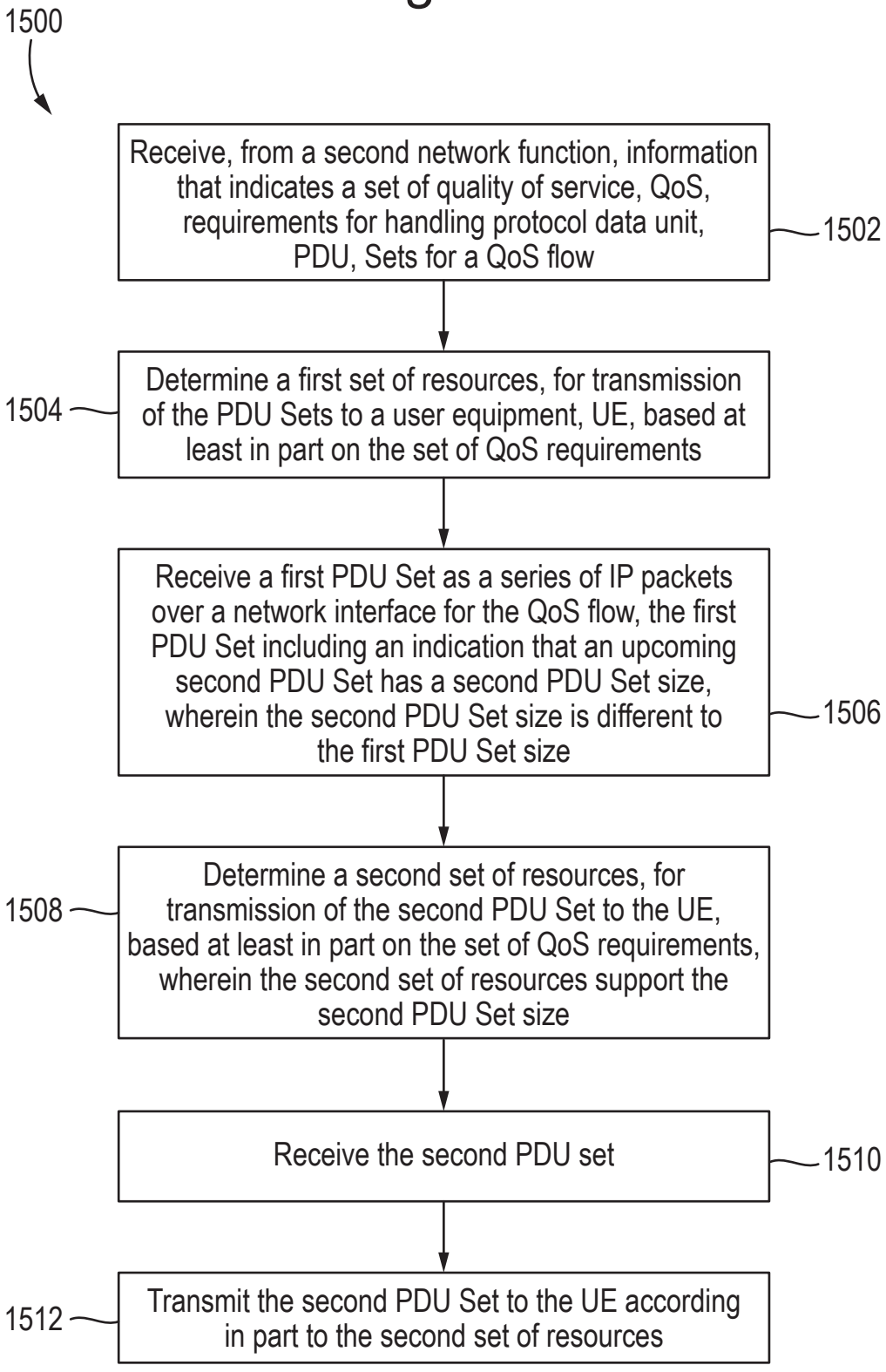
1500
Receive, from a second network function, information that indicates a set of quality of service, QoS, requirements for handling protocol data unit, PDU, Sets for a QoS flow
1502
Determine a first set of resources, for transmission of the PDU Sets to a user equipment, UE, based at least in part on the set of QoS requirements
1504
Receive a first PDU Set as a series of IP packets over a network interface for the QoS flow, the first PDU Set including an indication that an upcoming second PDU Set has a second PDU Set size, wherein the second PDU Set size is different to the first PDU Set size
1506
Determine a second set of resources, for transmission of the second PDU Set to the UE, based at least in part on the set of QoS requirements, wherein the second set of resources support the second PDU Set size
1508
Receive the second PDU set
1510
Transmit the second PDU Set to the UE according in part to the second set of resources
1512