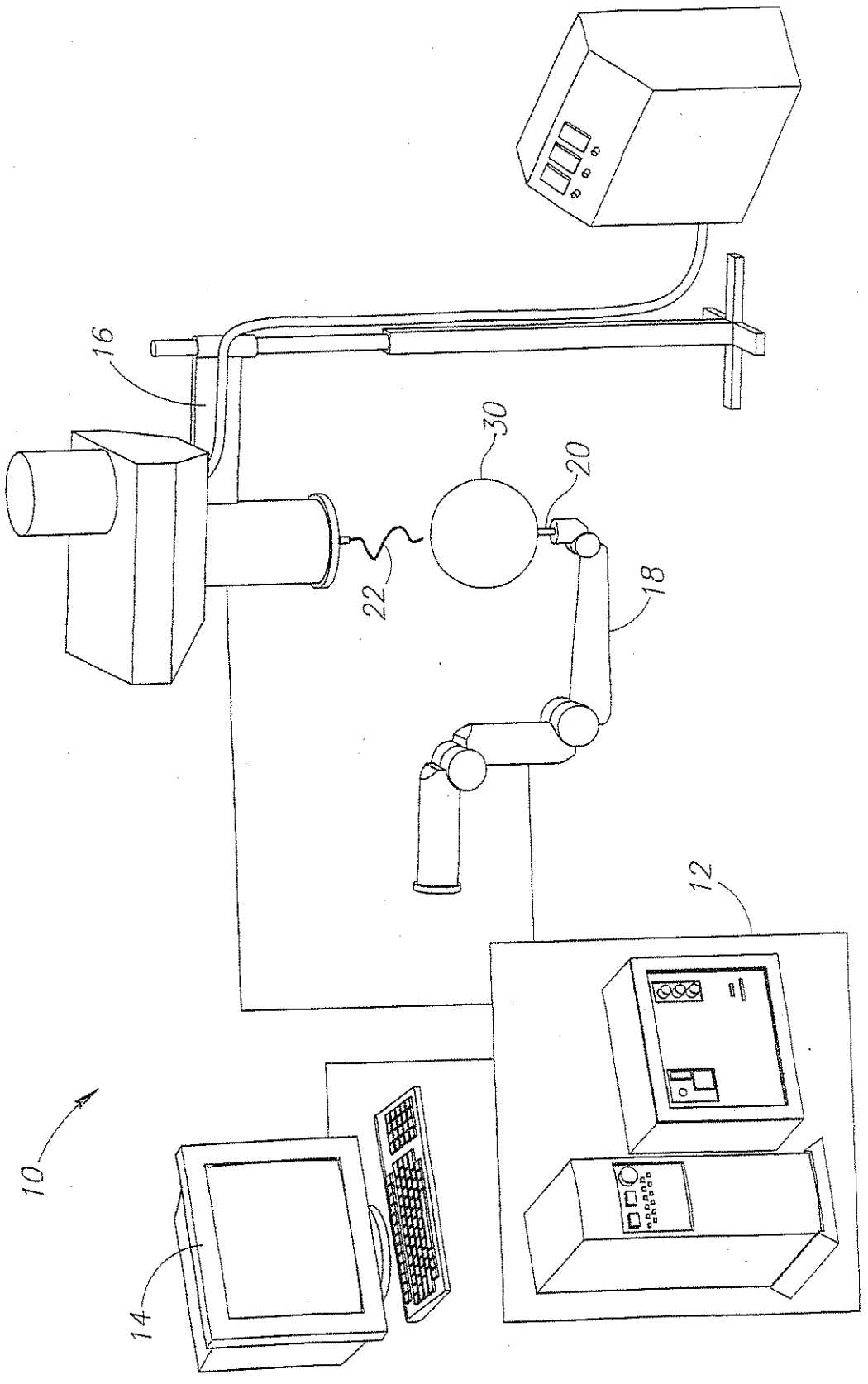


FIG.1

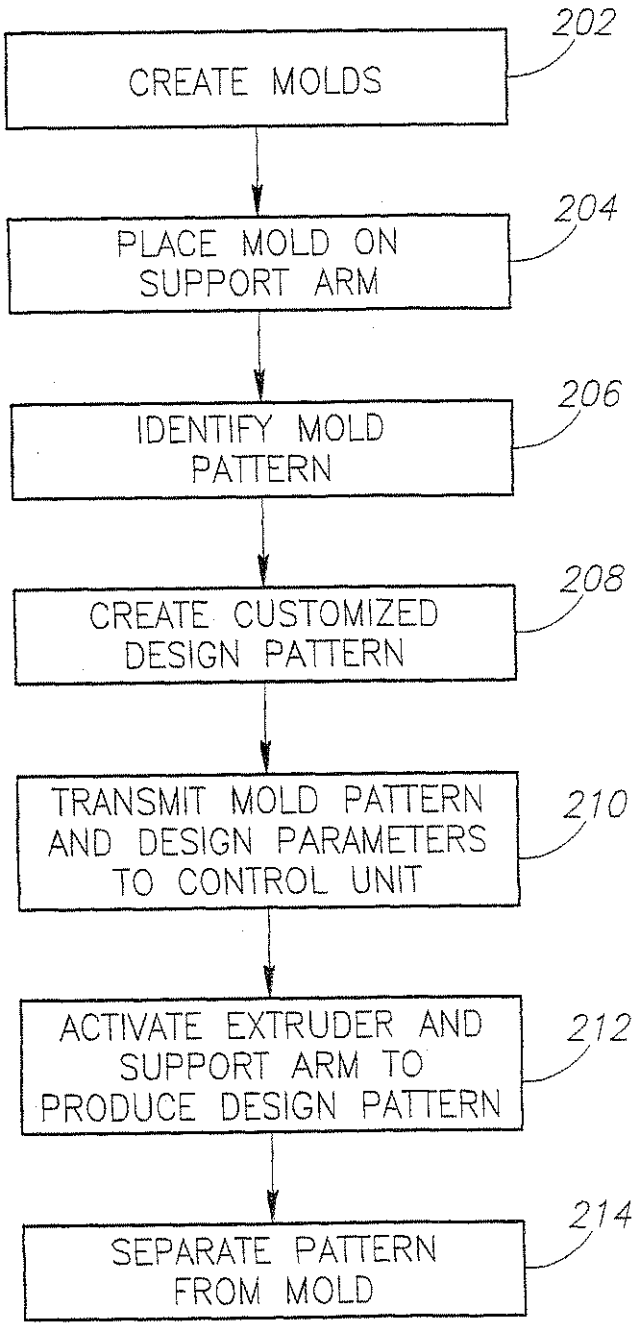
CREATE MOLDS
202
PLACE MOLD ON SUPPORT ARM
204
IDENTIFY MOLD PATTERN
206
CREATE CUSTOMIZED DESIGN PATTERN
208
TRANSMIT MOLD PATTERN AND DESIGN PARAMETERS TO CONTROL UNIT
210
ACTIVATE EXTRUDER AND SUPPORT ARM TO PRODUCE DESIGN PATTERN
212
SEPARATE PATTERN FROM MOLD
214

FIG.2

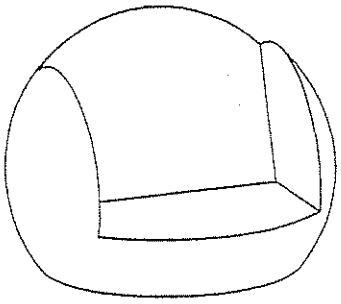

FIG.3A

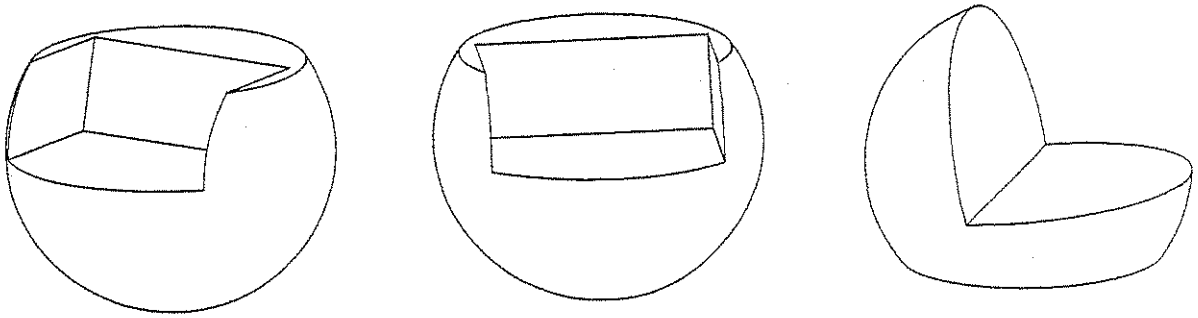

FIG.3B

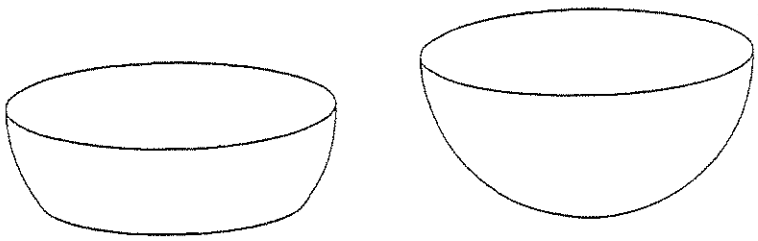

FIG.3C

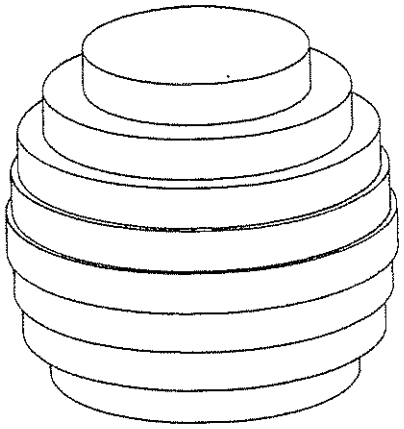

FIG.4A

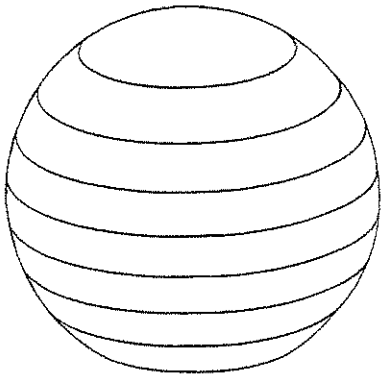

FIG.4B

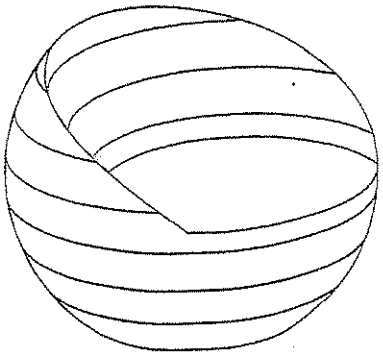

FIG.4C

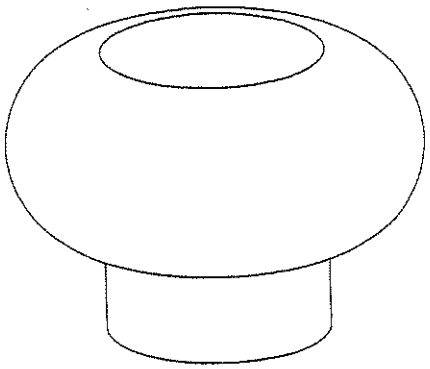

FIG.5

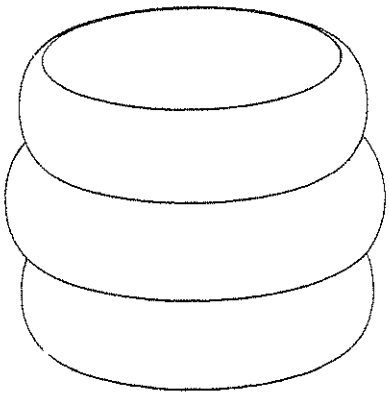

FIG.6

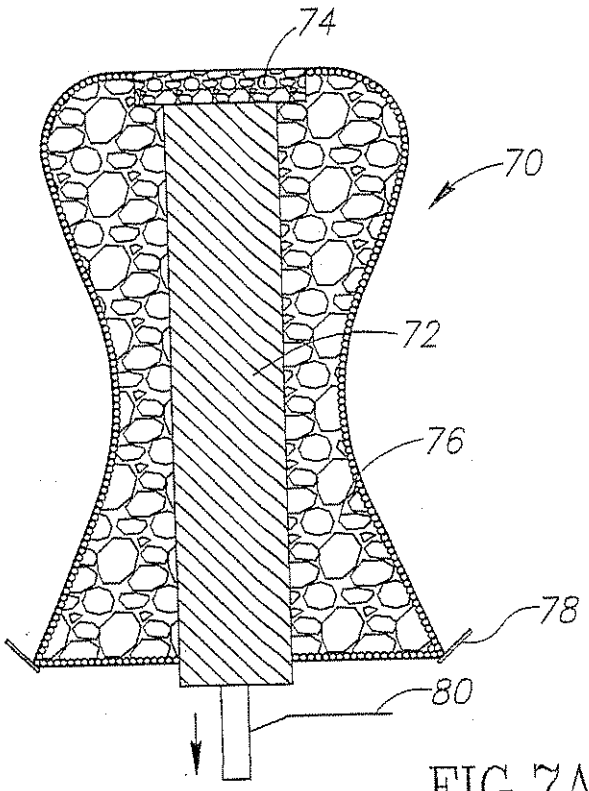


FIG.7A

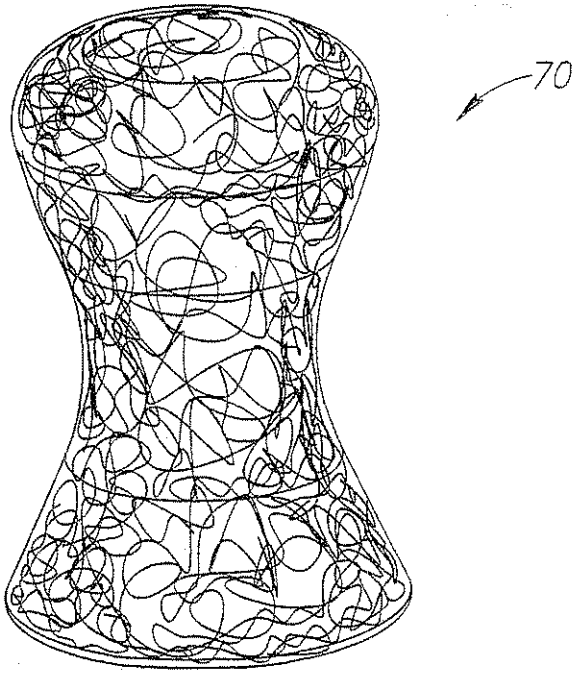


FIG.7B

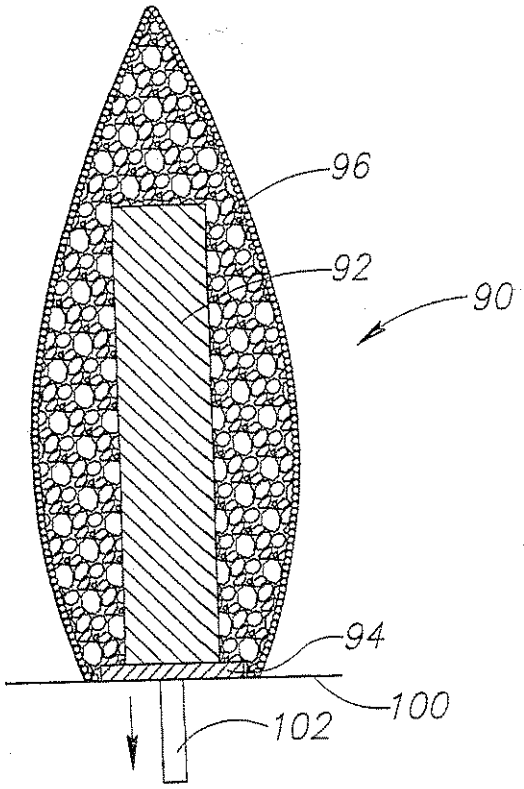


FIG.8A

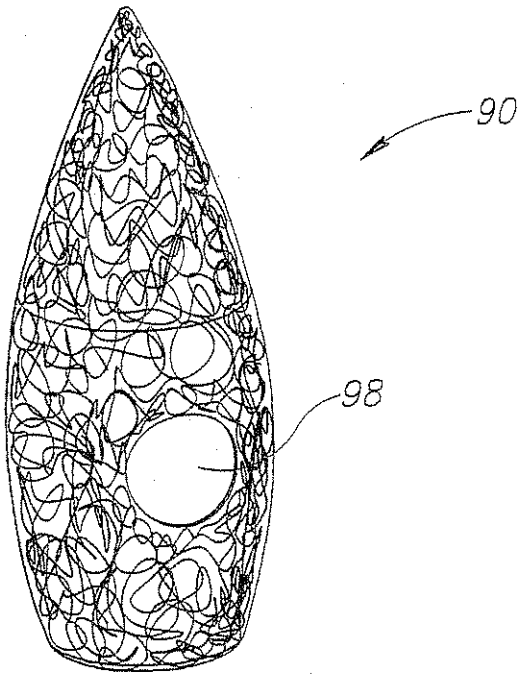


FIG.8B

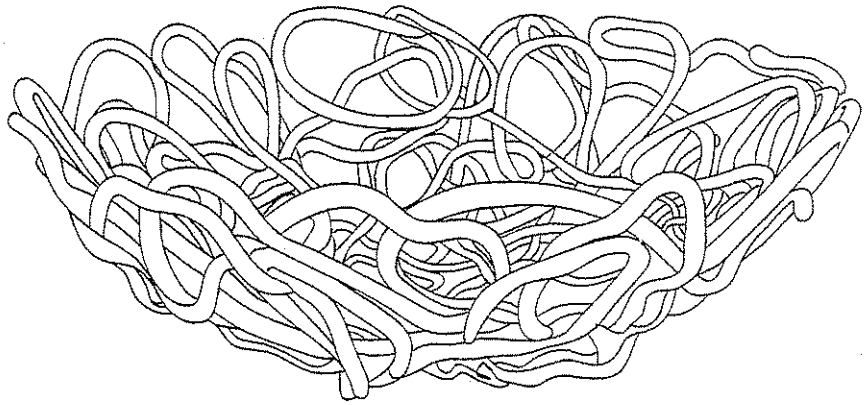

FIG.9

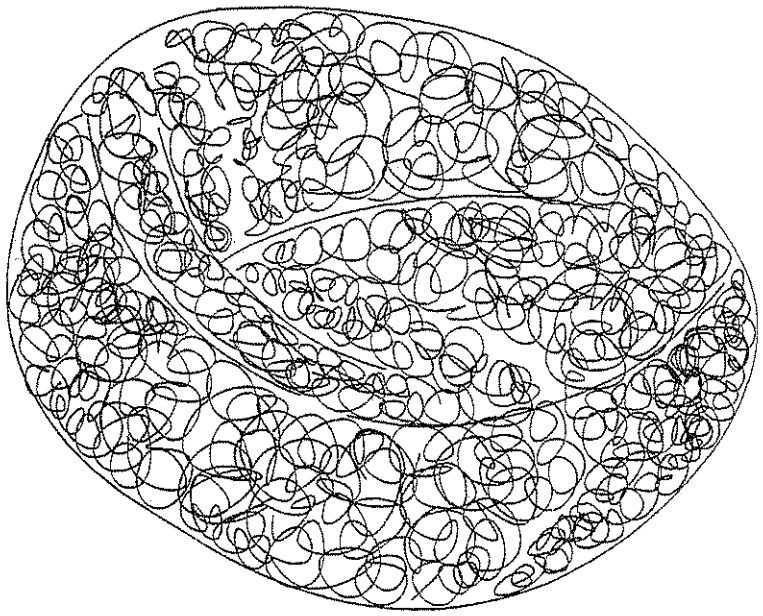

FIG.10

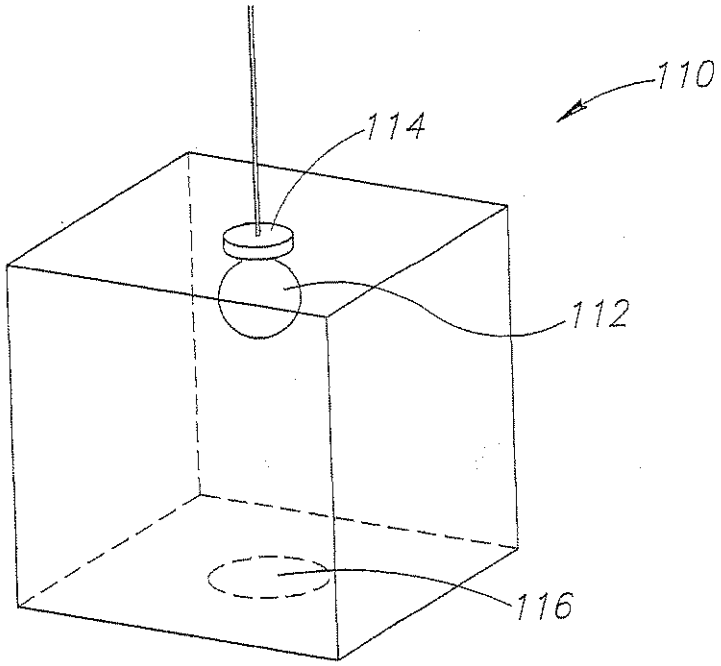


FIG.11A

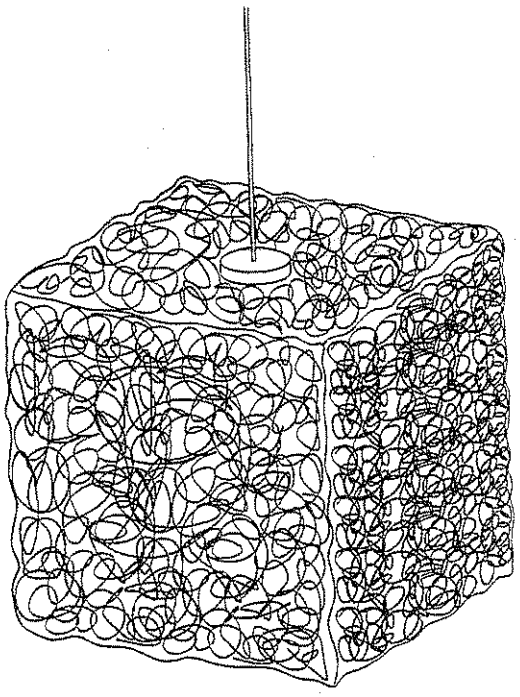

FIG.11B