(12) INTERNATIONAL APPLICATION PUBLISHED UNDER THE PATENT COOPERATION TREATY (PCT)

(19) World Intellectual Property Organization
International Bureau

(43) International Publication Date
5 January 2006 (05.01.2006)

PCT

(10) International Publication Number
WO 2006/001796 A1

(51) International Patent Classification[7]: B63B 35/44

(21) International Application Number:
PCT/US2004/018687

(22) International Filing Date: 9 June 2004 (09.06.2004)

(25) Filing Language: English

(26) Publication Language: English

(71) Applicant *(for all designated States except US)*: **FLOAT INC.** [US/US]; 1660 Hotel Circle North, Suite 725, San Diego, CA 92108 (US).

(72) Inventors; and

(75) Inventors/Applicants *(for US only)*: **BROWN, Neal, A.** [US/US]; 1660 Hotel Circle North, Suite 725, San Diego, CA 92108 (US). **INNIS, Donald, A.** [US/US]; 1660 Hotel Circle North, Suite 725, San Diego, CA 92108 (US).

(74) Agent: **LEWIS, Christopher, J.**; Schwabe Williamson & Wyatt, P.C., Pacwest Center, Suites 1600-1900, 1211 SW Fifth Avenue, Portland, OR 97204 (US).

(81) Designated States *(unless otherwise indicated, for every kind of national protection available)*: AE, AG, AL, AM, AT, AU, AZ, BA, BB, BG, BR, BW, BY, BZ, CA, CH, CN, CO, CR, CU, CZ, DE, DK, DM, DZ, EC, EE, EG, ES, FI, GB, GD, GE, GH, GM, HR, HU, ID, IL, IN, IS, JP, KE, KG, KP, KR, KZ, LC, LK, LR, LS, LT, LU, LV, MA, MD, MG, MK, MN, MW, MX, MZ, NA, NI, NO, NZ, OM, PG, PH, PL, PT, RO, RU, SC, SD, SE, SG, SK, SL, SY, TJ, TM, TN, TR, TT, TZ, UA, UG, US, UZ, VC, VN, YU, ZA, ZM, ZW.

(84) Designated States *(unless otherwise indicated, for every kind of regional protection available)*: ARIPO (BW, GH, GM, KE, LS, MW, MZ, NA, SD, SL, SZ, TZ, UG, ZM, ZW), Eurasian (AM, AZ, BY, KG, KZ, MD, RU, TJ, TM), European (AT, BE, BG, CH, CY, CZ, DE, DK, EE, ES, FI, FR, GB, GR, HU, IE, IT, LU, MC, NL, PL, PT, RO, SE, SI, SK, TR), OAPI (BF, BJ, CF, CG, CI, CM, GA, GN, GQ, GW, ML, MR, NE, SN, TD, TG).

Declaration under Rule 4.17:
— *of inventorship (Rule 4.17(iv)) for US only*

Published:
— *with international search report*

For two-letter codes and other abbreviations, refer to the "Guidance Notes on Codes and Abbreviations" appearing at the beginning of each regular issue of the PCT Gazette.

(54) **Title:** FLOATING PLATFORM METHOD AND APPARATUS FIELD OF THE INVENTION

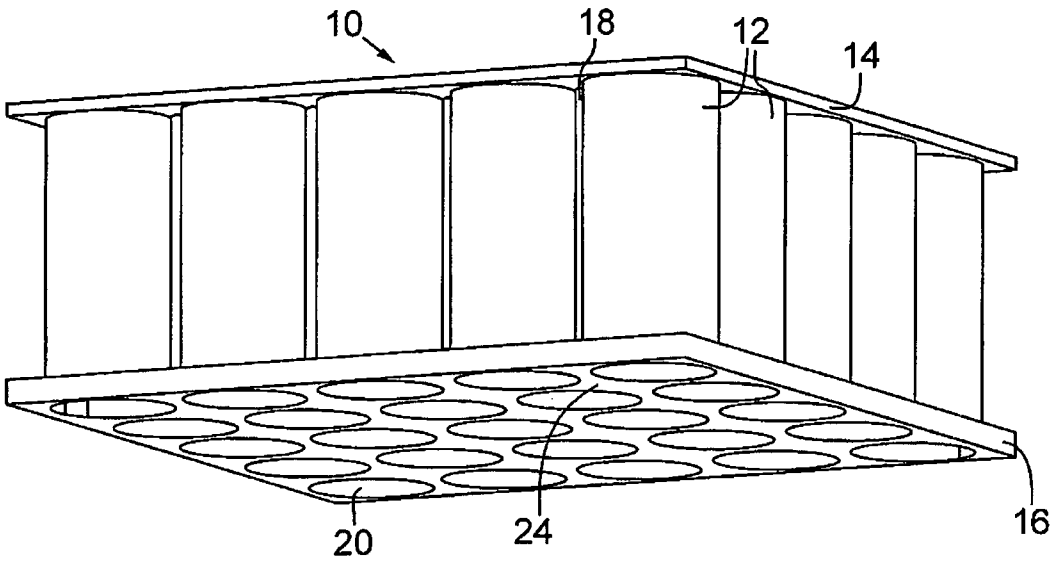

(57) **Abstract:** A floating platform is provided. The floating platform includes a top surface (14), a plurality of buoyancy members (12) interconnected to the top surface and extending downwardly into a body of water, a bottom plate (16) and a plurality of interstitial volumes (24) that are sealed at a bottom end by the bottom plate to prevent the flow of water into the interstitial volume.

WO 2006/001796 A1