Fig. 1

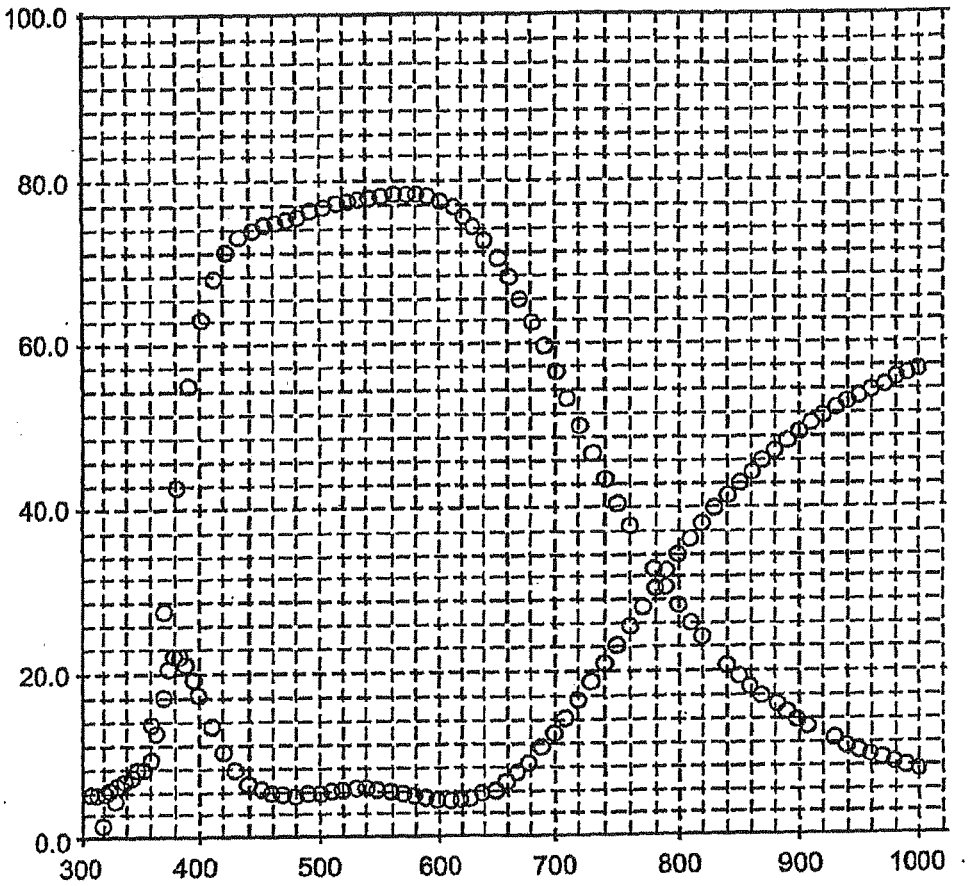
100.0
80.0
60.0
40.0
20.0
0.0
300
400
500
600
700
800
900
1000
REFLECTANCE (%) AND TRANSMITTANCE (%) VS WAVELENGTH

Fig. 2

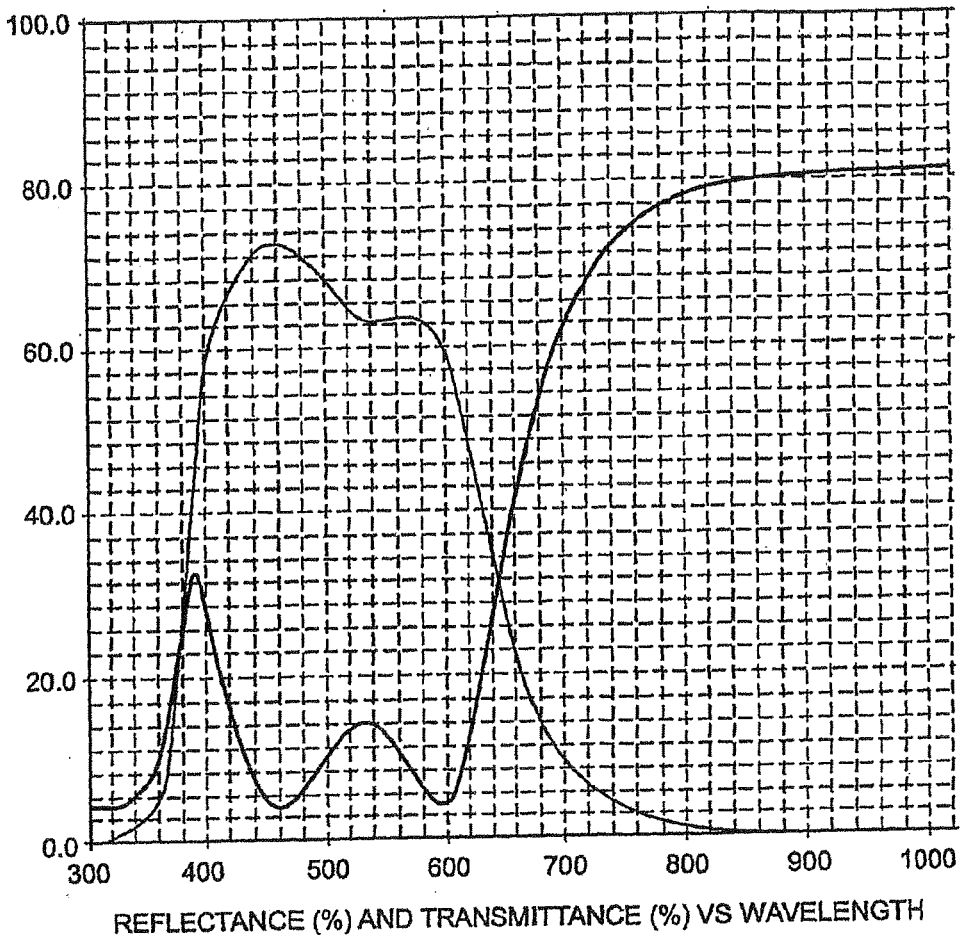
100.0
80.0
60.0
40.0
20.0
0.0
300
400
500
600
700
800
900
1000
REFLECTANCE (%) AND TRANSMITTANCE (%) VS WAVELENGTH

Fig. 3

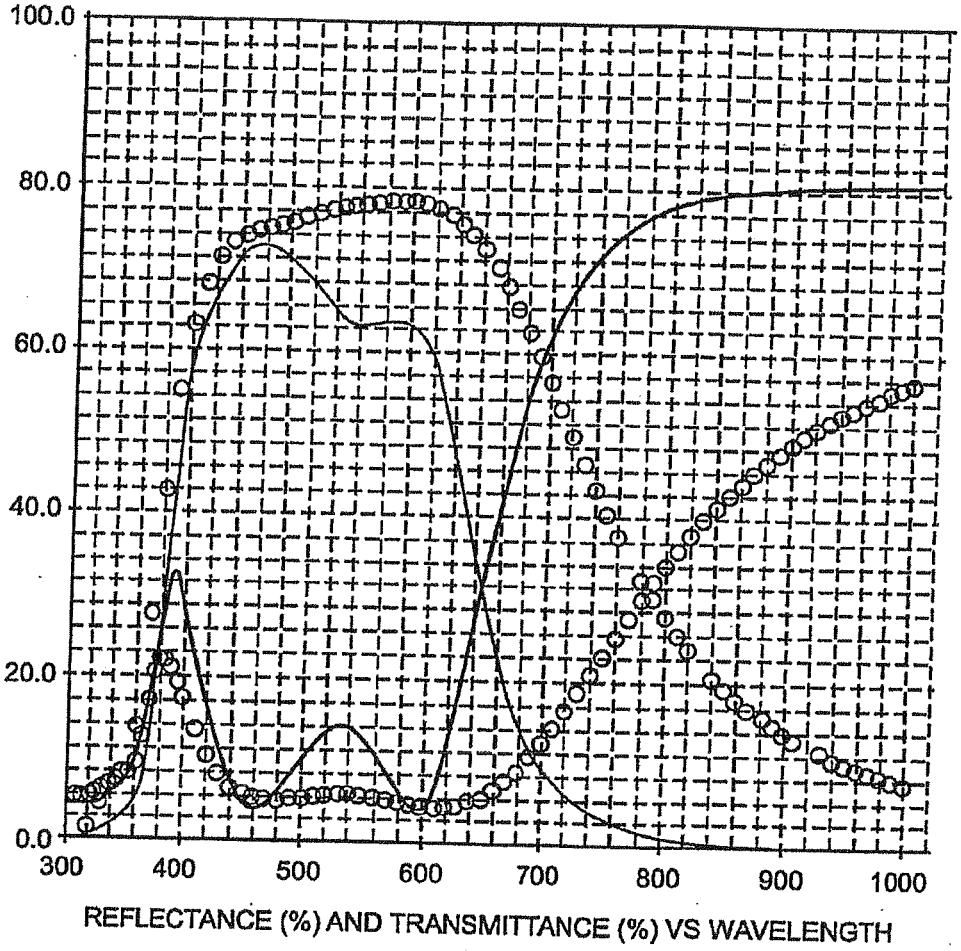
100.0
80.0
60.0
40.0
20.0
0.0
300
400
500
600
700
800
900
1000
REFLECTANCE (%) AND TRANSMITTANCE (%) VS WAVELENGTH

Fig. 4

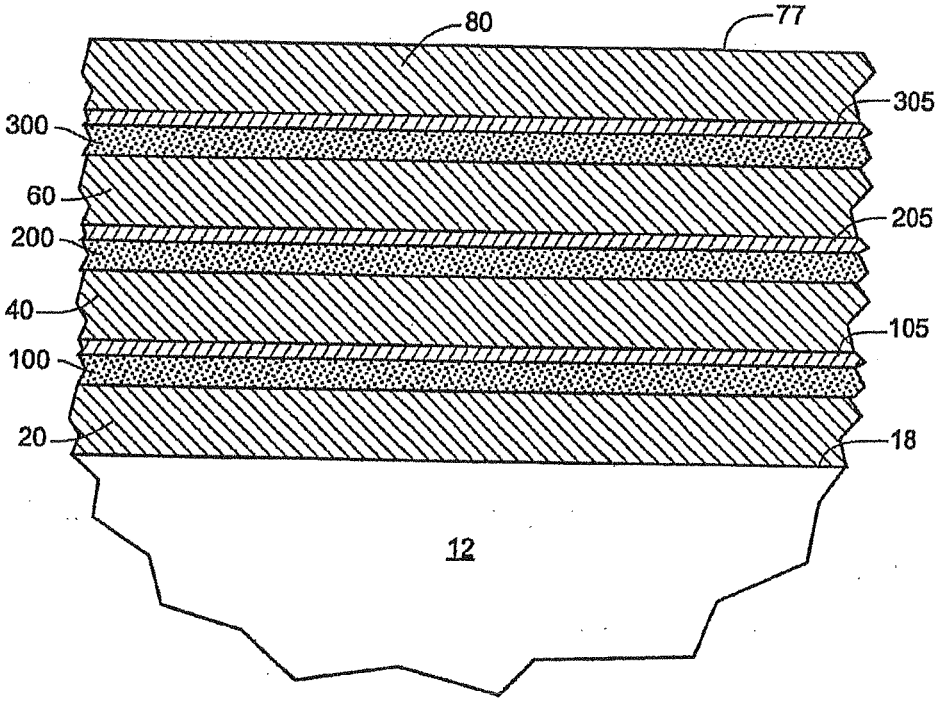

Fig. 5

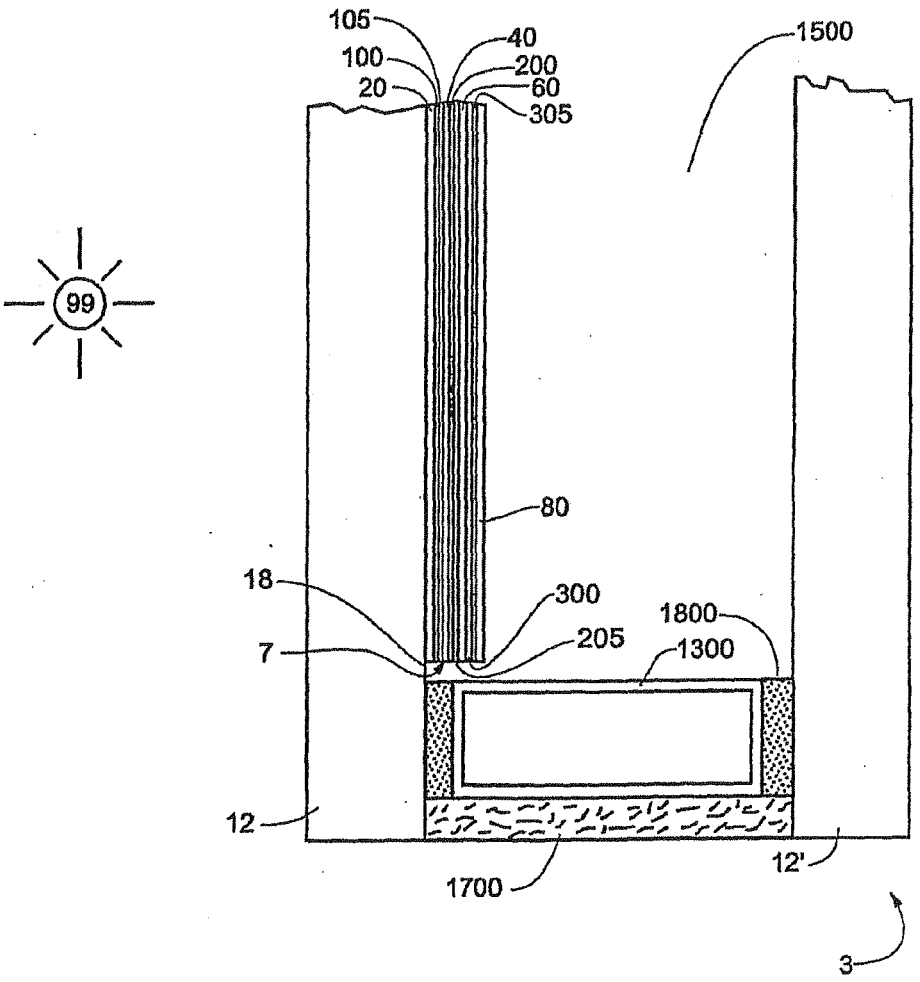
105
100
20
40
200
60
305
1500
99
80
18
300
205
1800
1300
7
12
12'
1700
3

Fig. 6

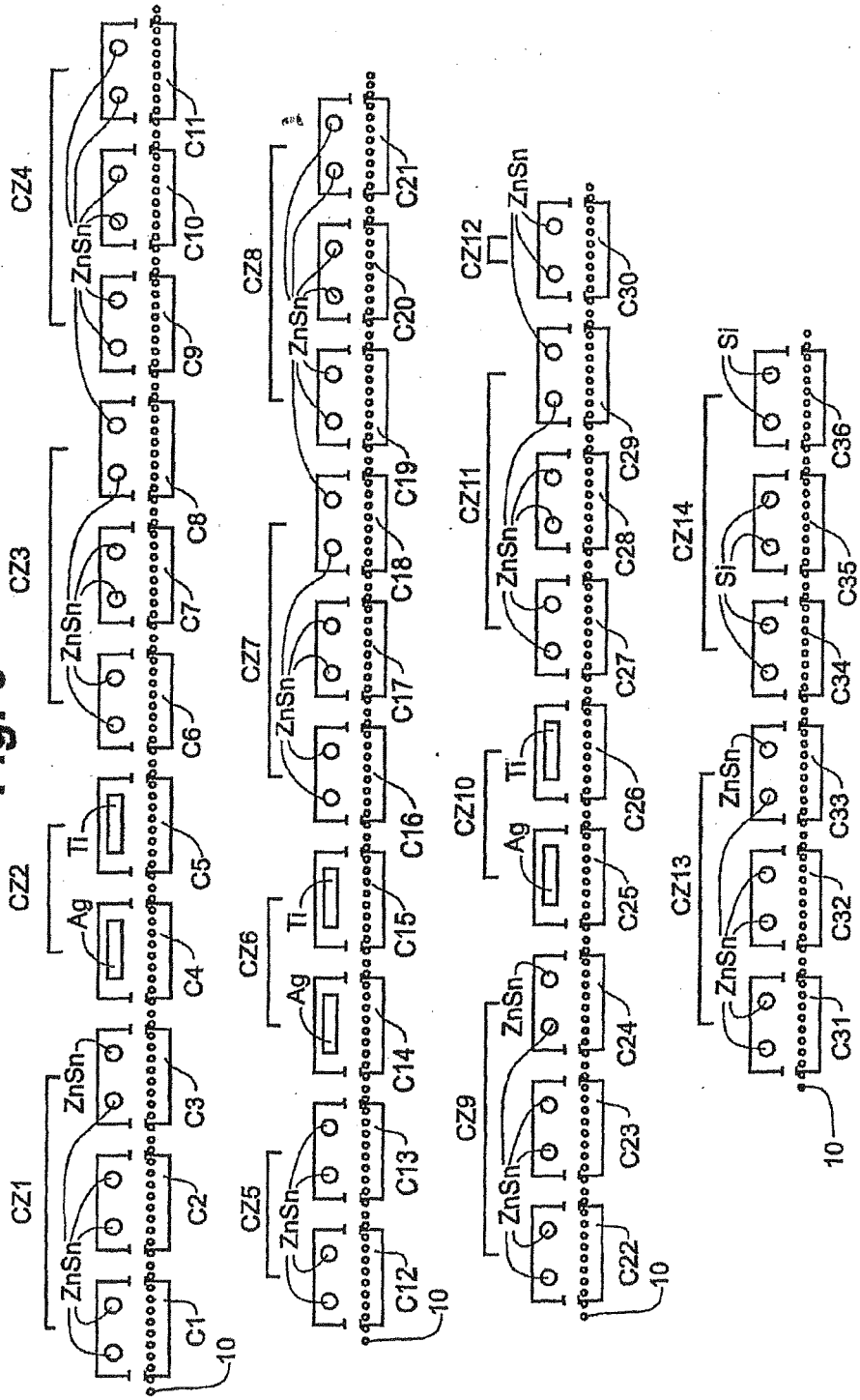
CZ1
CZ2
CZ3
CZ4
CZ5
CZ6
CZ7
CZ8
CZ9
CZ10
CZ11
CZ12
CZ13
CZ14
ZnSn
Ag
Ti
Si
C1
C2
C3
C4
C5
C6
C7
C8
C9
C10
C11
C12
C13
C14
C15
C16
C17
C18
C19
C20
C21
C22
C23
C24
C25
C26
C27
C28
C29
C30
C31
C32
C33
C34
C35
C36
10