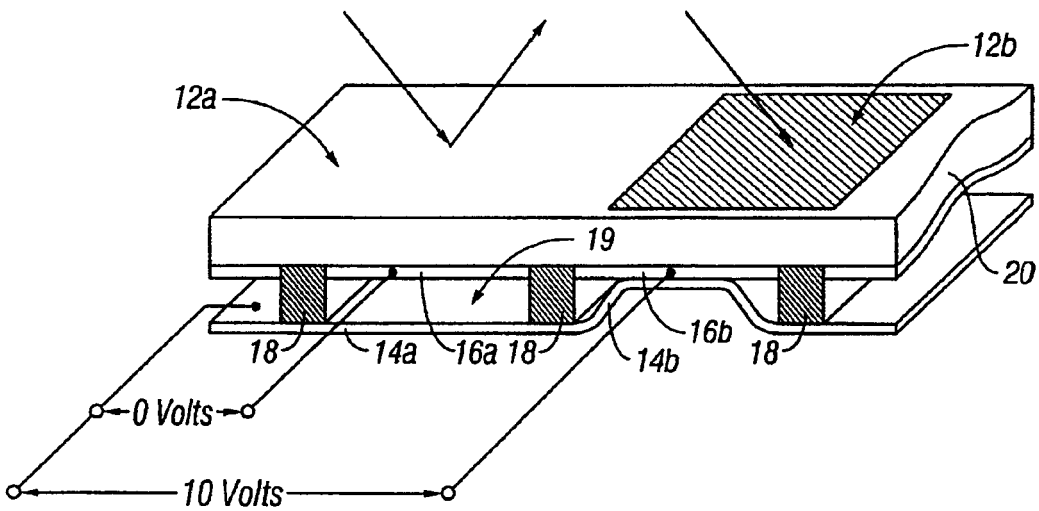

FIG. 1

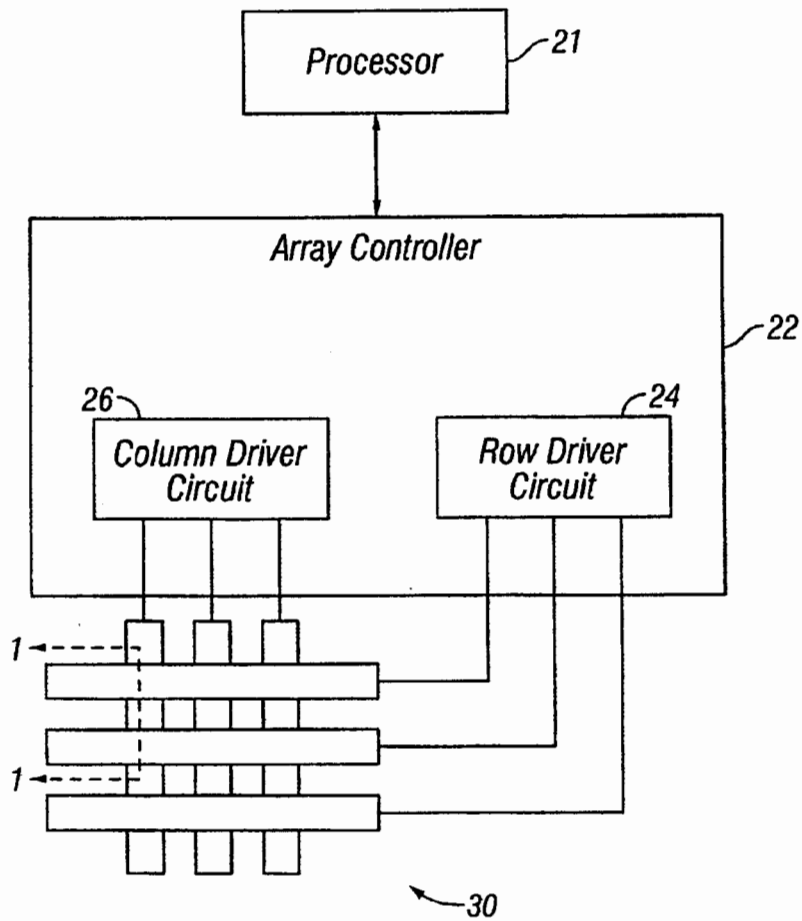
Processor
21
Array Controller
22
26
Column Driver Circuit
24
Row Driver Circuit
1
1
30

FIG. 2

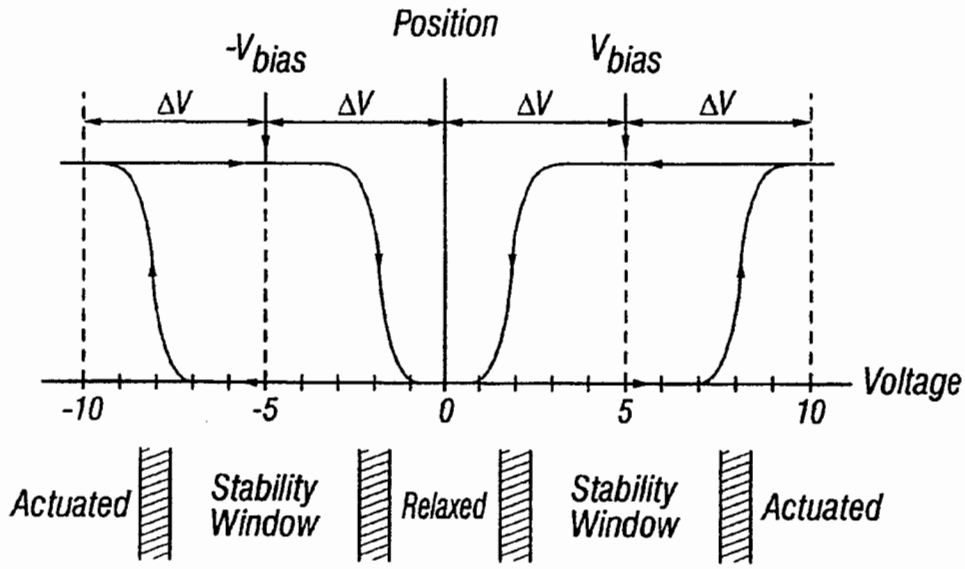

FIG. 3

Row Output Signals	Column Output Signals: $+V_{bias}$	Column Output Signals: $-V_{bias}$
0	Stable	Stable
$+\Delta V$	Relax	Actuate
$-\Delta V$	Actuate	Relax

FIG. 4

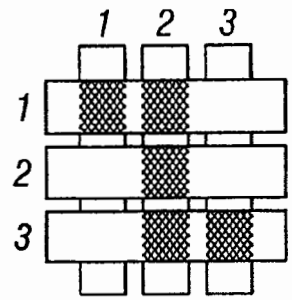
1
2
3
1
2
3

FIG. 5A

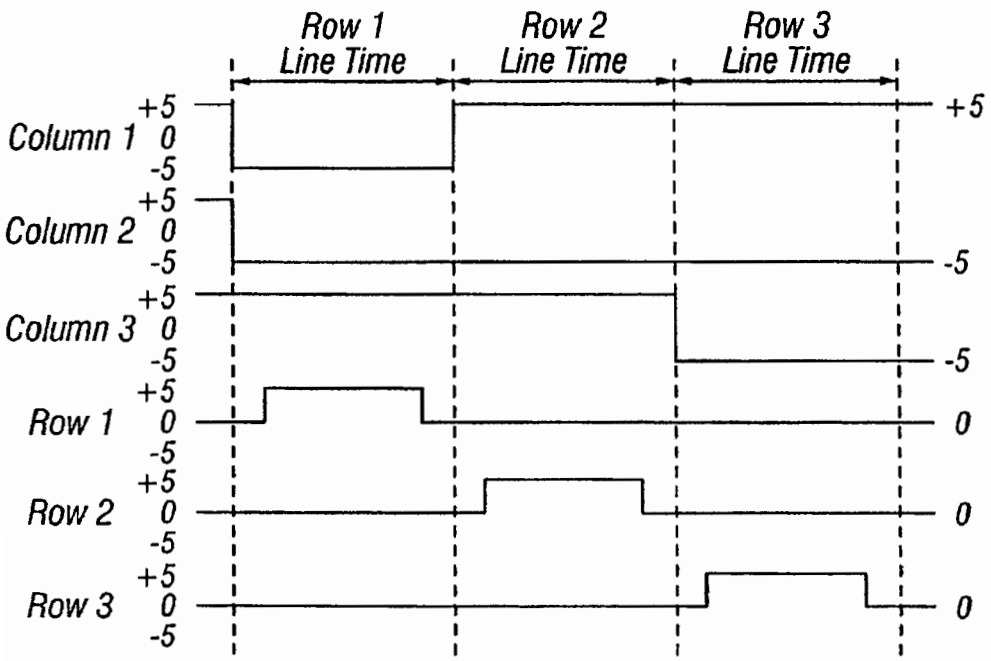
Row 1 Line Time
Row 2 Line Time
Row 3 Line Time
Column 1
Column 2
Column 3
Row 1
Row 2
Row 3
+5
0
-5
+5
-5
-5
0
0
0

FIG. 5B

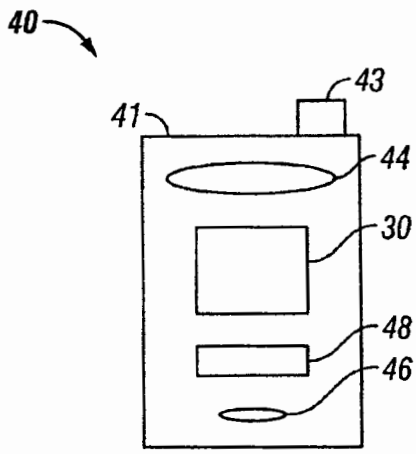
40
41
43
44
30
48
46

FIG. 6A

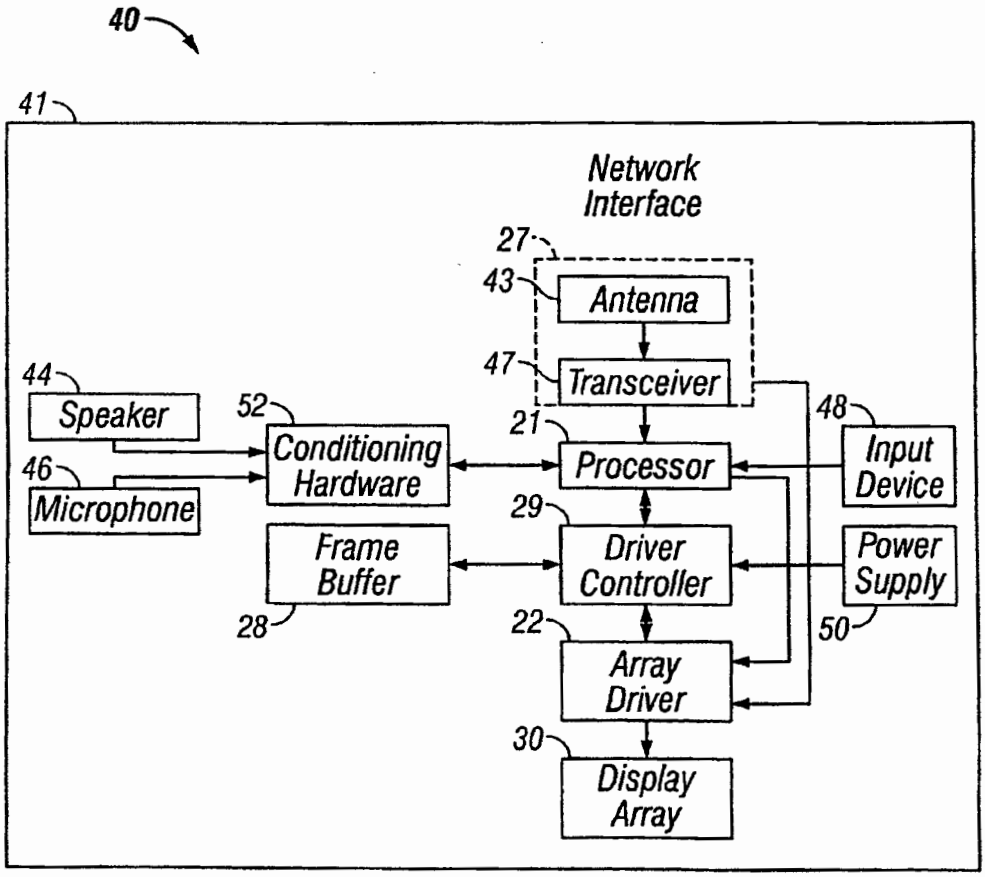
40
41
Network Interface
27
43
Antenna
47
Transceiver
44
Speaker
52
Conditioning Hardware
21
Processor
48
Input Device
46
Microphone
29
Frame Buffer
Driver Controller
Power Supply
28
22
50
Array Driver
30
Display Array

FIG. 6B

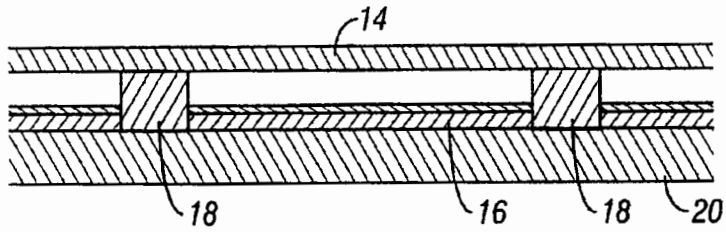

FIG. 7A

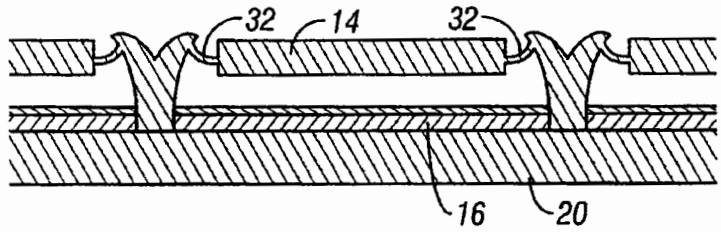

FIG. 7B

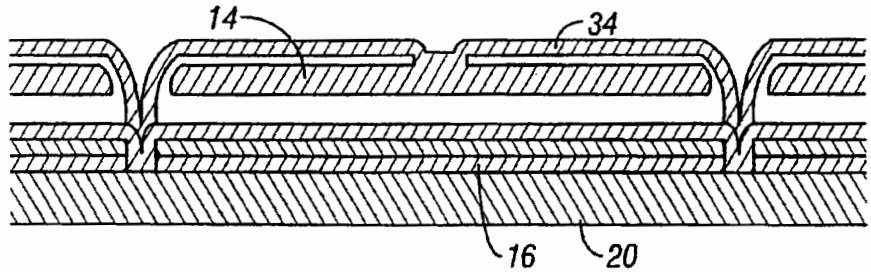

FIG. 7C

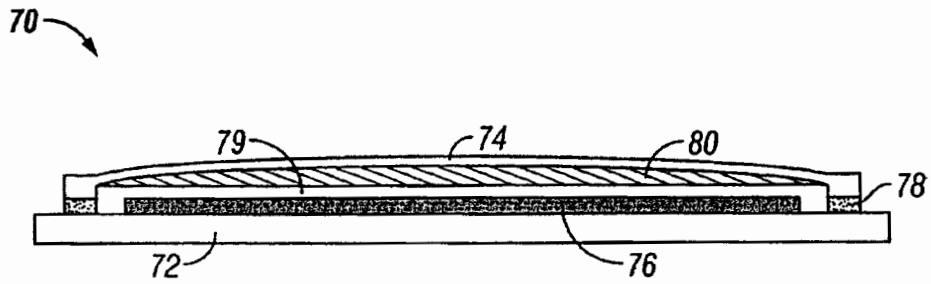

FIG. 8

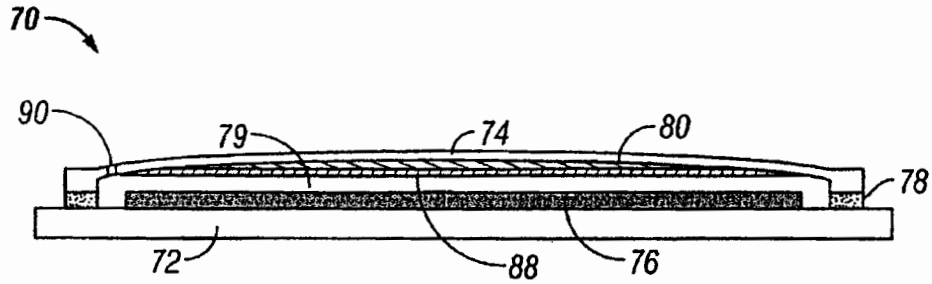

FIG. 9

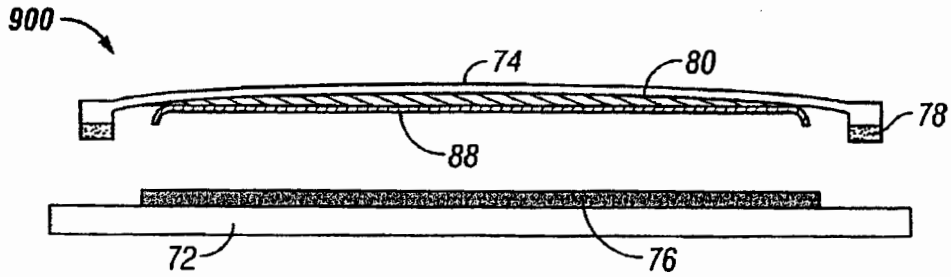

FIG. 10