(12) INTERNATIONAL APPLICATION PUBLISHED UNDER THE PATENT COOPERATION TREATY (PCT)

(19) World Intellectual Property Organization
International Bureau

(43) International Publication Date
07 December 2017 (07.12.2017)

WIPO | PCT

(10) International Publication Number
WO 2017/207822 A1

(51) International Patent Classification:
C12M 1/00 (2006.01) *B01F 15/00* (2006.01)
B01F 7/00 (2006.01) *C12M 1/06* (2006.01)

(21) International Application Number:
PCT/EP2017/063631

(22) International Filing Date:
05 June 2017 (05.06.2017)

(25) Filing Language: English

(26) Publication Language: English

(30) Priority Data:
62/345,381 03 June 2016 (03.06.2016) US

(71) Applicant: **LONZA LIMITED** [CH/CH]; Lonzastrasse, 3930 Visp (CH).

(72) Inventors: **JAQUES, Colin Mark**; 228 Bath Road, Slough Berkshire SL1 4DX (GB). **KHAN, Mohsan Waseem**; 228 Bath Road, Slough Berkshire SL1 4DX (GB). **COSTA, Rita D'Ornelas P. De Barros**; 228 Bath Road, Slough Berkshire SL1 4DX (GB). **BEANEY, Anthony**; 228 Bath Road, Slough Berkshire SL1 4DX (GB). **VALENTINE, David**; 228 Bath Road, Slough Berkshire SL1 4DX (GB).

(74) Agent: **SUTCLIFFE, Nicholas** et al.; Mewburn Ellis LLP, City Tower, 40 Basinghall Street, London Greater London EC2V 5DE (GB).

(81) Designated States *(unless otherwise indicated, for every kind of national protection available)*: AE, AG, AL, AM, AO, AT, AU, AZ, BA, BB, BG, BH, BN, BR, BW, BY, BZ, CA, CH, CL, CN, CO, CR, CU, CZ, DE, DJ, DK, DM, DO, DZ, EC, EE, EG, ES, FI, GB, GD, GE, GH, GM, GT, HN, HR, HU, ID, IL, IN, IR, IS, JP, KE, KG, KH, KN, KP, KR, KW, KZ, LA, LC, LK, LR, LS, LU, LY, MA, MD, ME, MG, MK, MN, MW, MX, MY, MZ, NA, NG, NI, NO, NZ, OM, PA, PE, PG, PH, PL, PT, QA, RO, RS, RU, RW, SA, SC, SD, SE, SG, SK, SL, SM, ST, SV, SY, TH, TJ, TM, TN, TR, TT, TZ, UA, UG, US, UZ, VC, VN, ZA, ZM, ZW.

(84) Designated States *(unless otherwise indicated, for every kind of regional protection available)*: ARIPO (BW, GH, GM, KE, LR, LS, MW, MZ, NA, RW, SD, SL, ST, SZ, TZ, UG, ZM, ZW), Eurasian (AM, AZ, BY, KG, KZ, RU, TJ, TM), European (AL, AT, BE, BG, CH, CY, CZ, DE, DK, EE, ES, FI, FR, GB, GR, HR, HU, IE, IS, IT, LT, LU, LV, MC, MK, MT, NL, NO, PL, PT, RO, RS, SE, SI, SK, SM, TR), OAPI (BF, BJ, CF, CG, CI, CM, GA, GN, GQ, GW, KM, ML, MR, NE, SN, TD, TG).

(54) Title: SINGLE USE BIOREACTOR

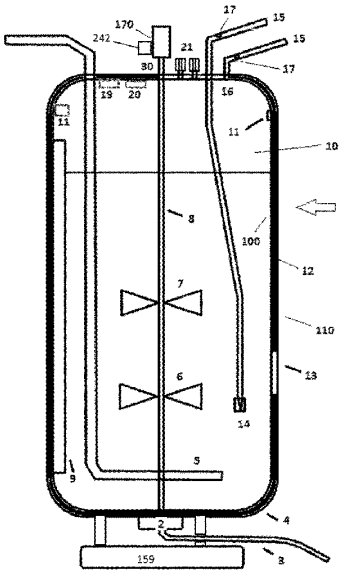

FIG. 1A

(57) Abstract: A single-use bioreactor is provided. The single-use bioreactor may include a bioprocess container, a shell, at least one agitator, at least one sparger, at least one gas filter inlet port for the sparger(s) and headspace overlay, at least one fill port, at least one harvest port, at least one sample port, and at least one probe. In examples, at least one controller may monitor and control one or more parameters associated with the single-use bioreactor A method to cultivate and propagate mammalian cells is also provided. The method may include cultivating under suitable conditions and in a suitable culture medium in a first single-use bioreactor, transferring the medium containing the cells obtained by propagation from the at least one mammalian cell is into a second single-use bioreactor, transferring the medium containing the cells obtained by propagation from the at least one mammalian cell is into a third single-use bioreactor, and cultivating the cells in the third bioreactor.

WO 2017/207822 A1

[Continued on next page]

Published:

— *with international search report (Art. 21(3))*

— *before the expiration of the time limit for amending the claims and to be republished in the event of receipt of amendments (Rule 48.2(h))*