FIG.1

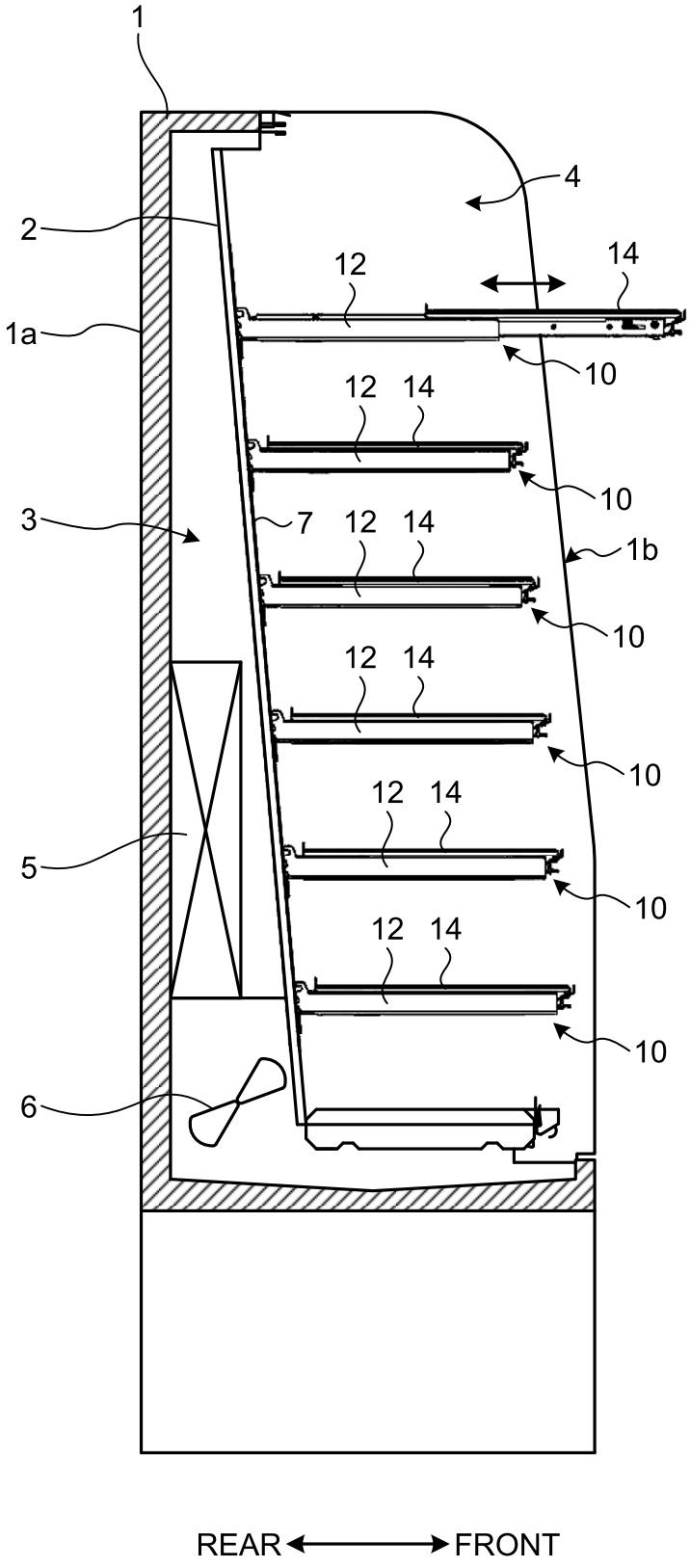

FIG.2

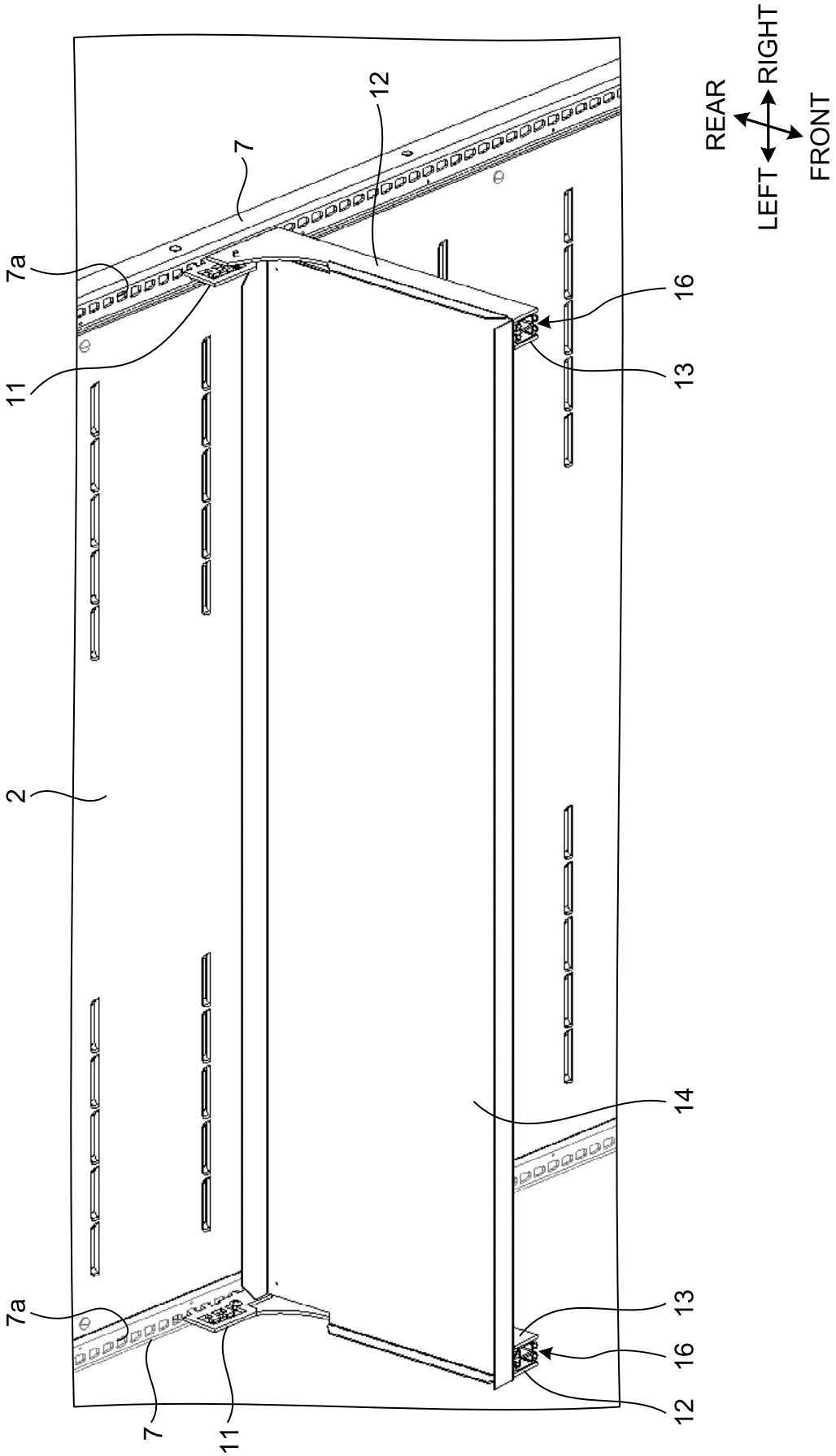

FIG.3

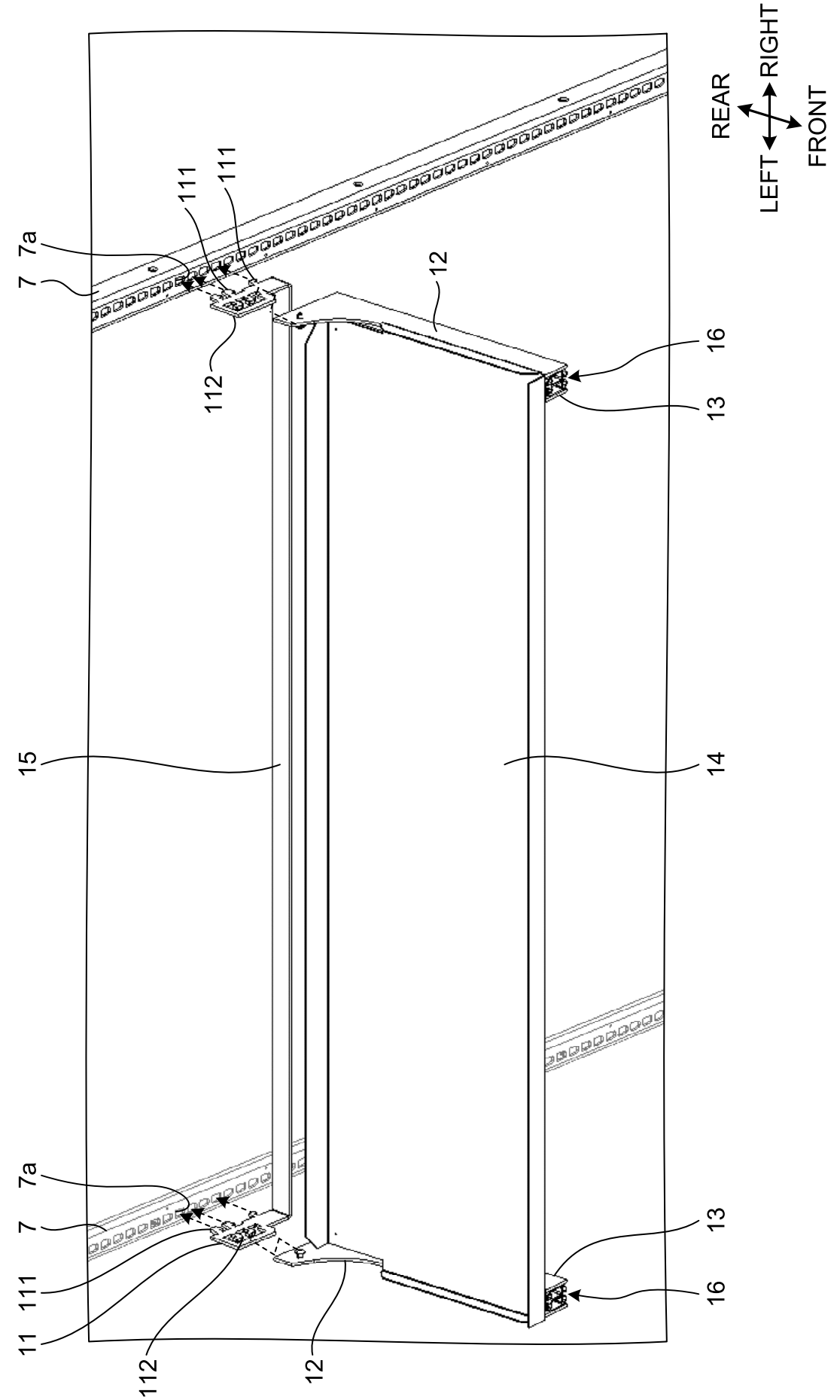
REAR
RIGHT
LEFT
FRONT
7
7a
111
111
112
12
16
13
15
14
7
7a
111
11
112
12
13
16

FIG.4

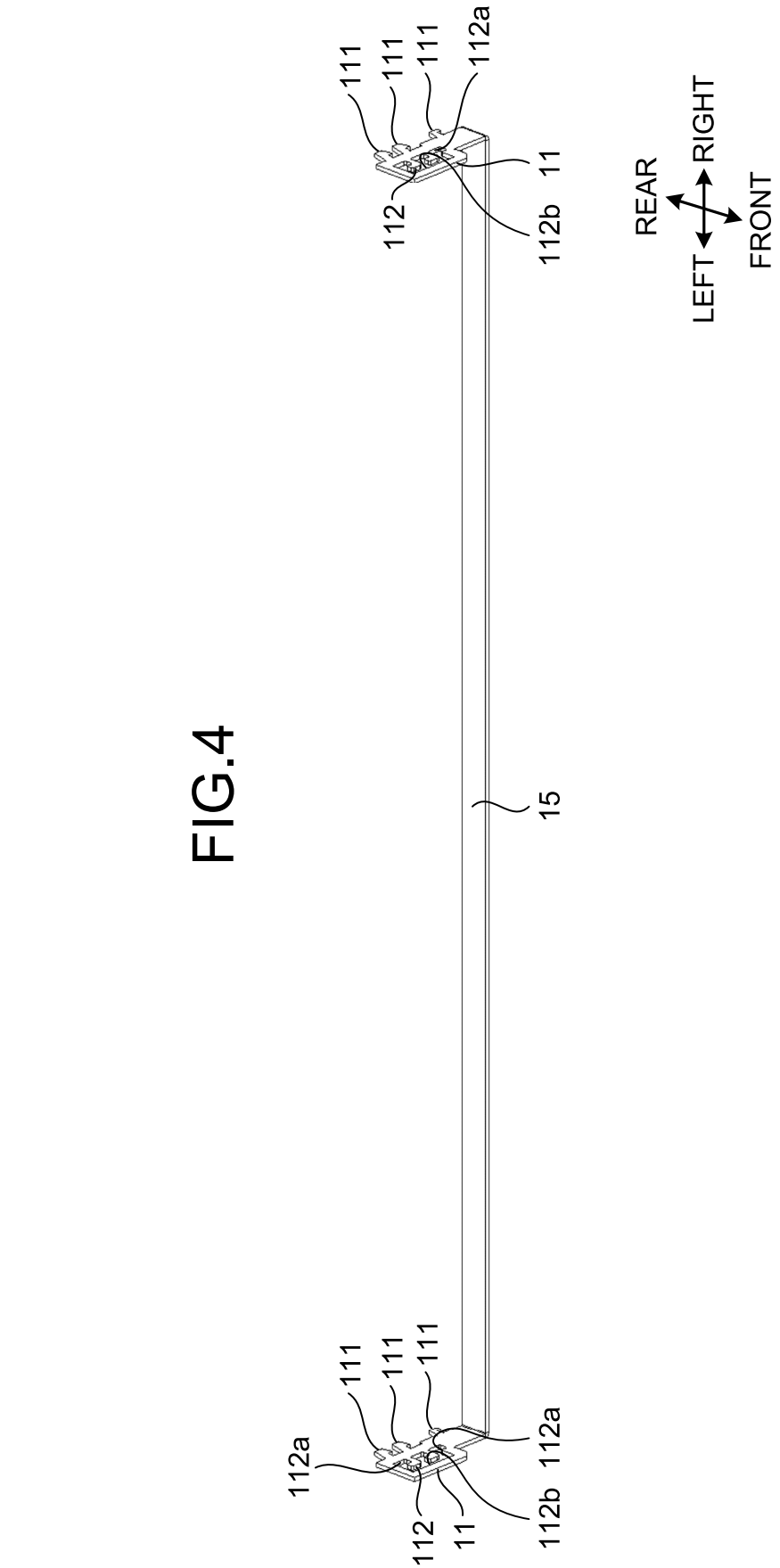
111
111
111
112a
11
112
112b
15
REAR
RIGHT
LEFT
FRONT
112a
111
111
111
112a
112
11
112b

FIG.5

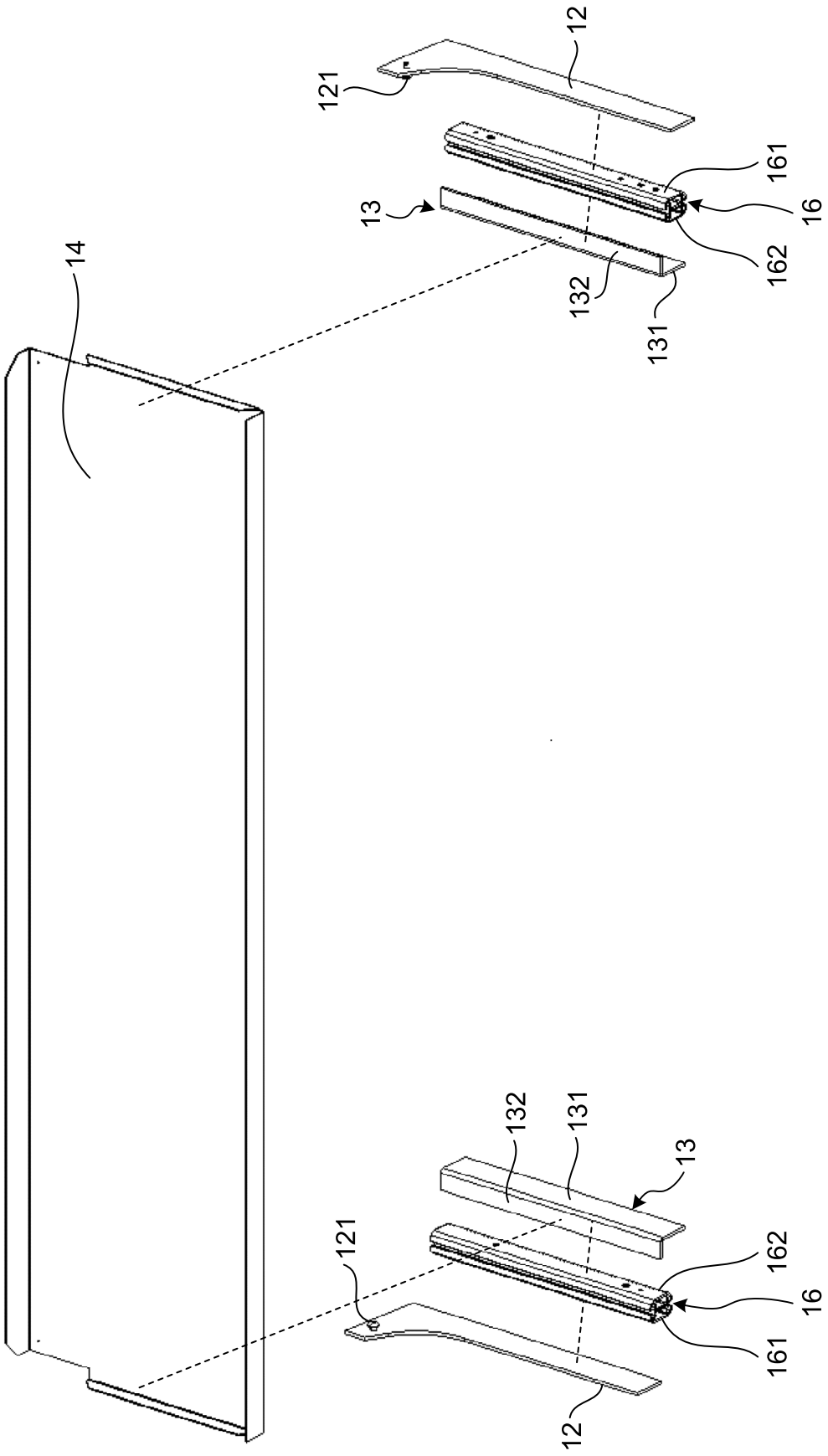

FIG.6

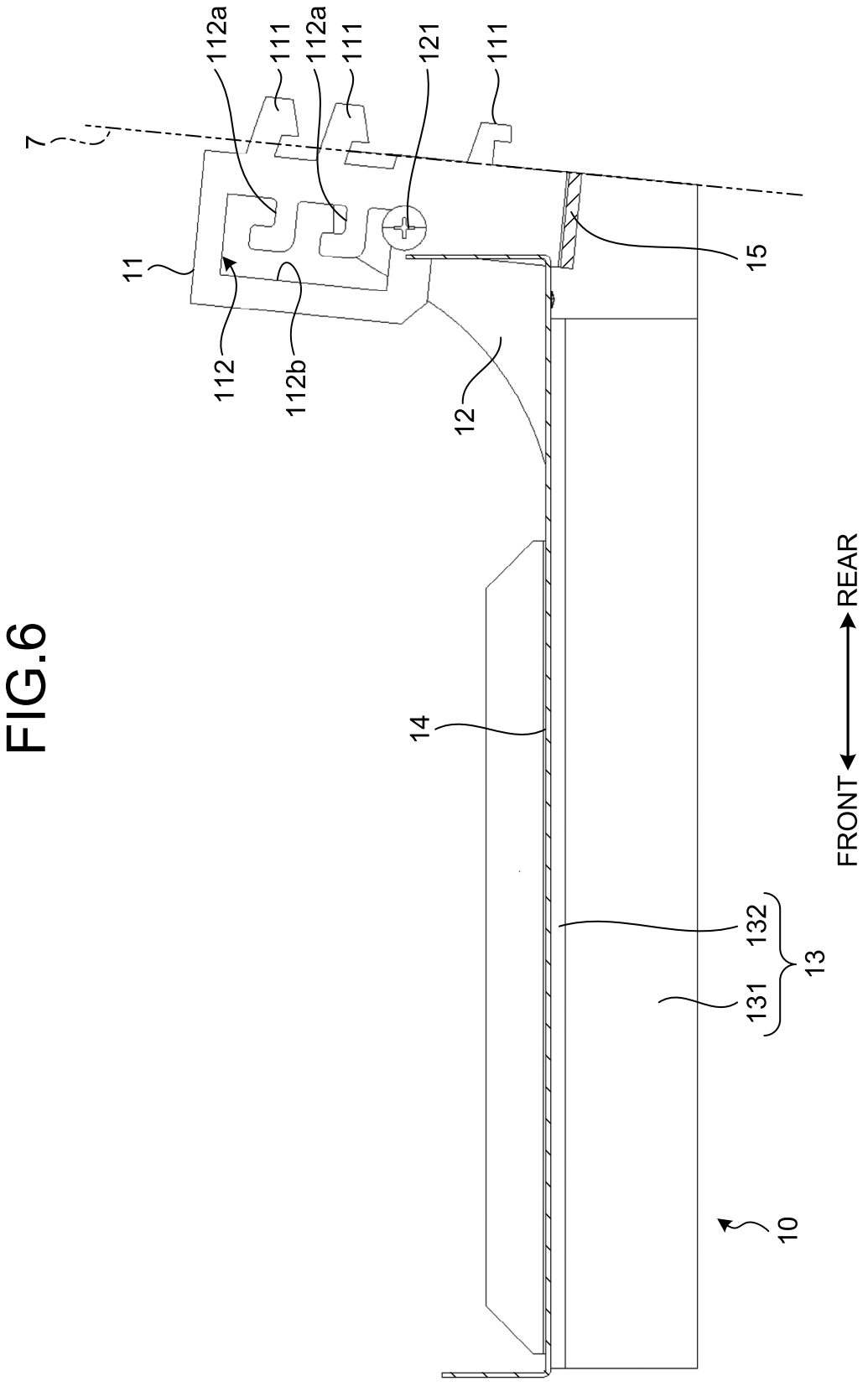
7
112a
111
112a
111
121
111
11
112
112b
12
15
14
132
13
131
10
FRONT
REAR

FIG.7

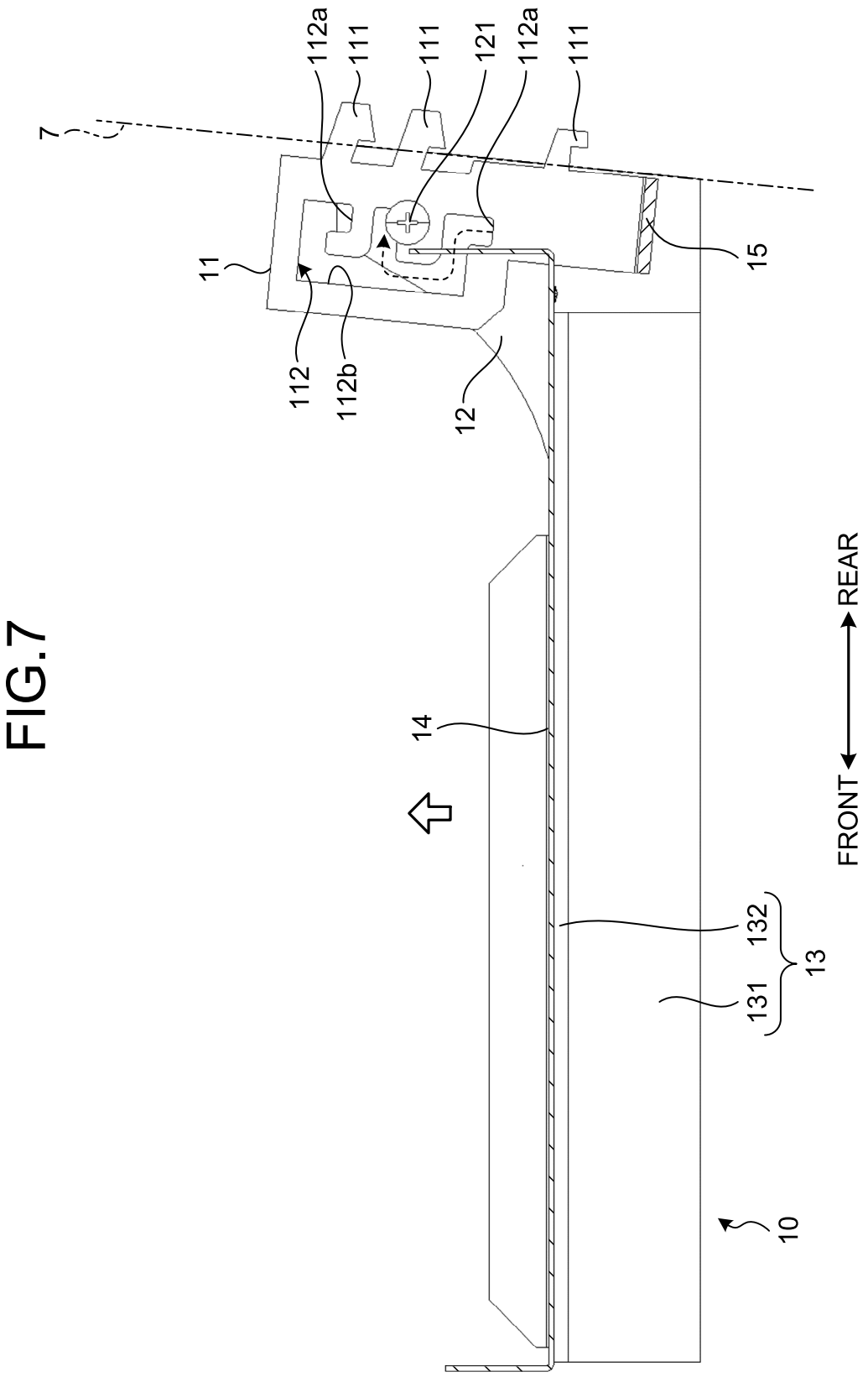
7
112a
111
111
121
112a
111
11
15
112
112b
12
14
FRONT
REAR
132
13
131
10

FIG.8

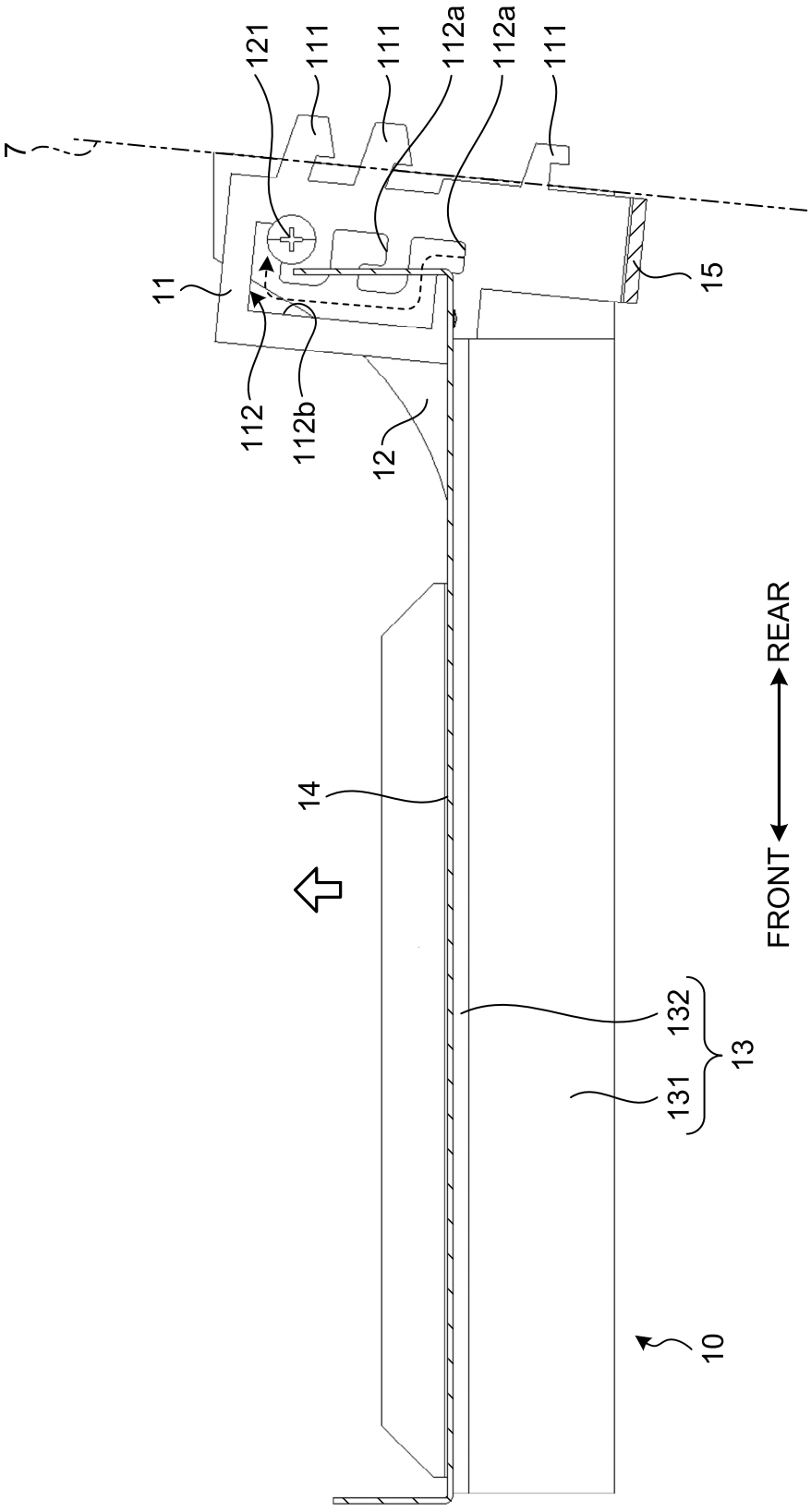
7
121
111
111
112a
112a
111
11
15
112
112b
12
14
FRONT
REAR
132
13
131
10