Fig. 1

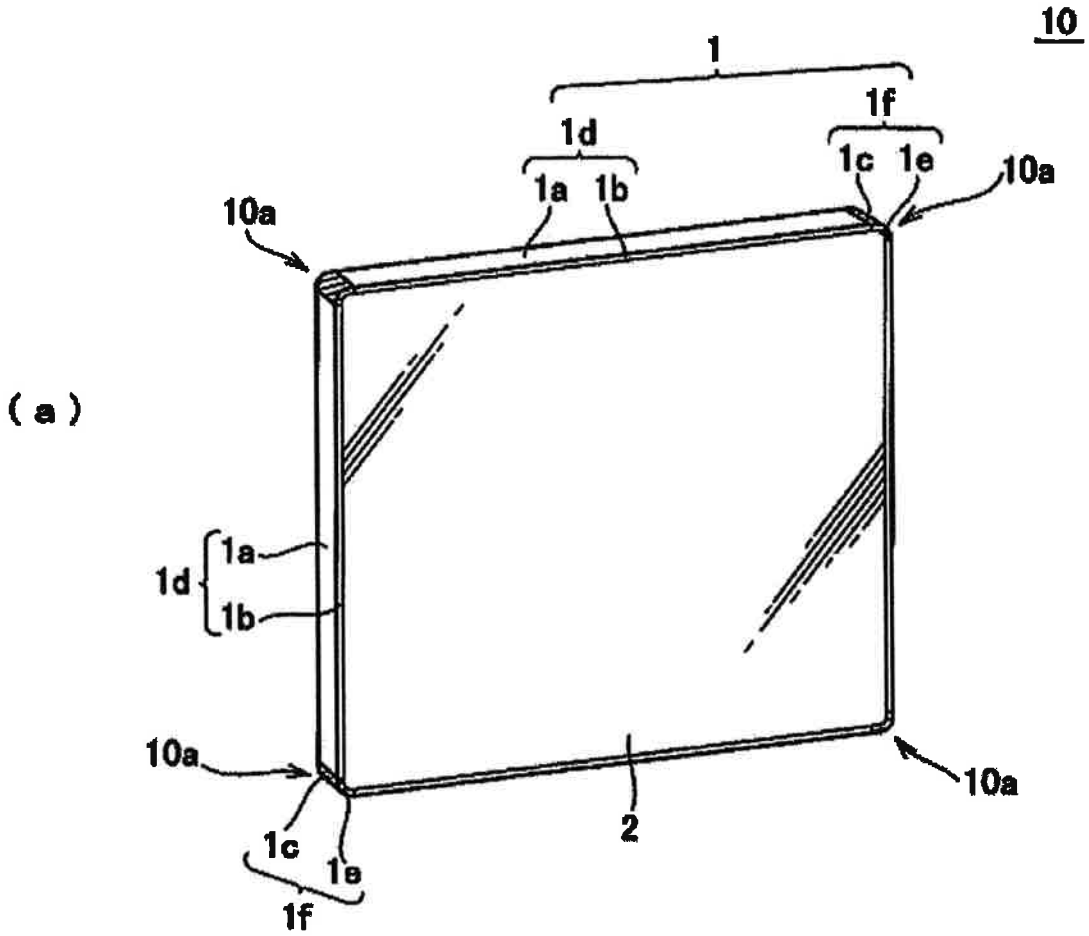

(a)

(b)

Fig. 2

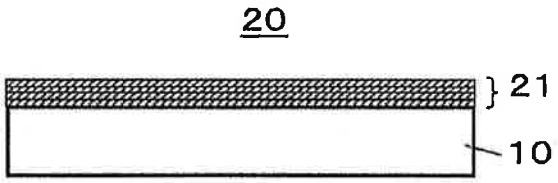

Fig. 3

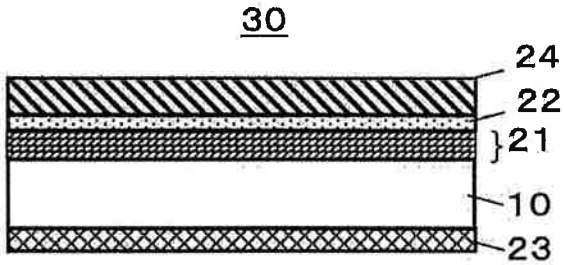

Fig. 4

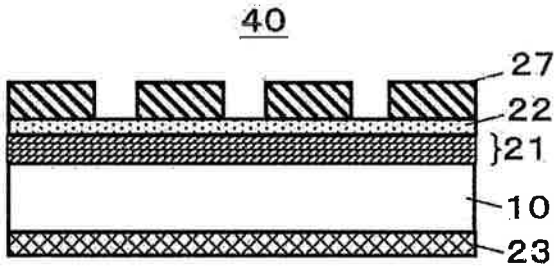

Fig. 5

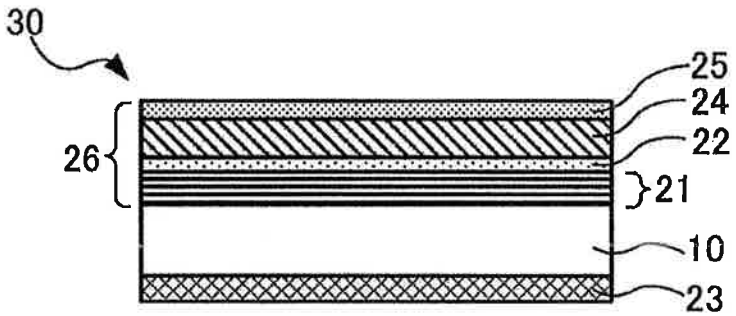

Fig. 6

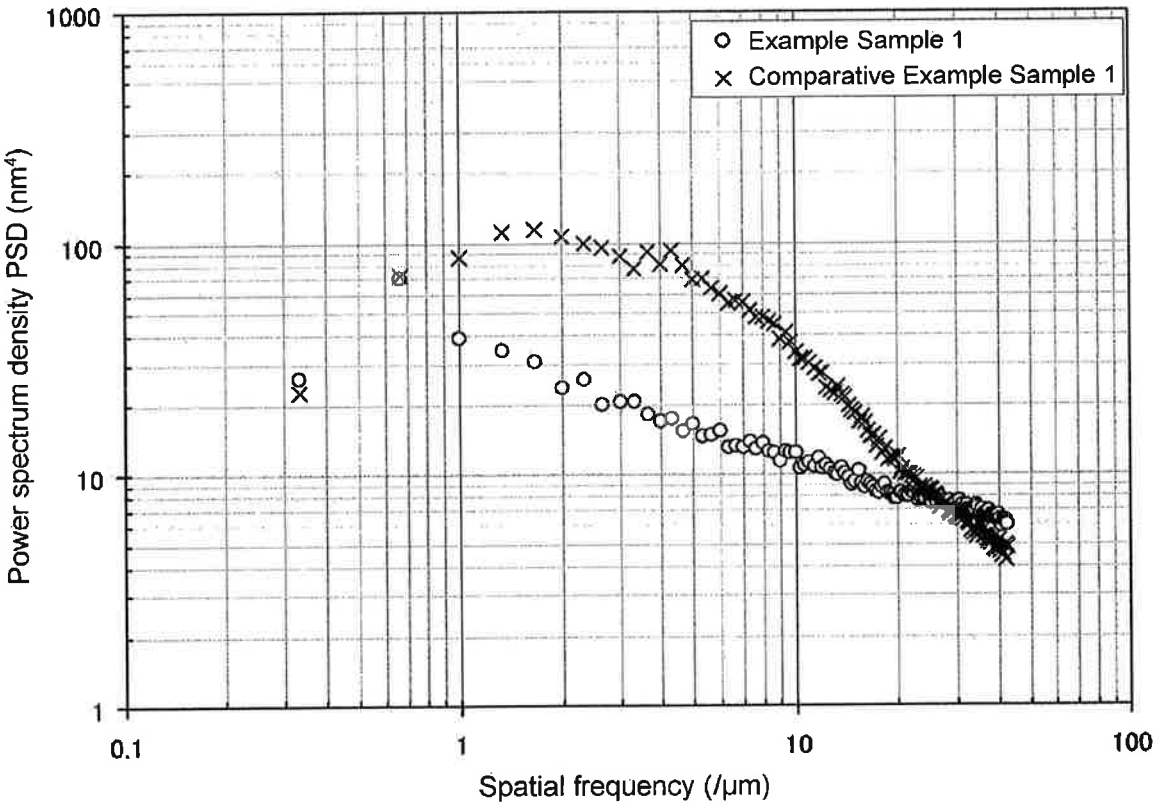
Example Sample 1
Comparative Example Sample 1
Power spectrum density PSD (nm⁴)
1000
100
10
1
0.1
1
10
100
Spatial frequency (/μm)