FIGURE 1

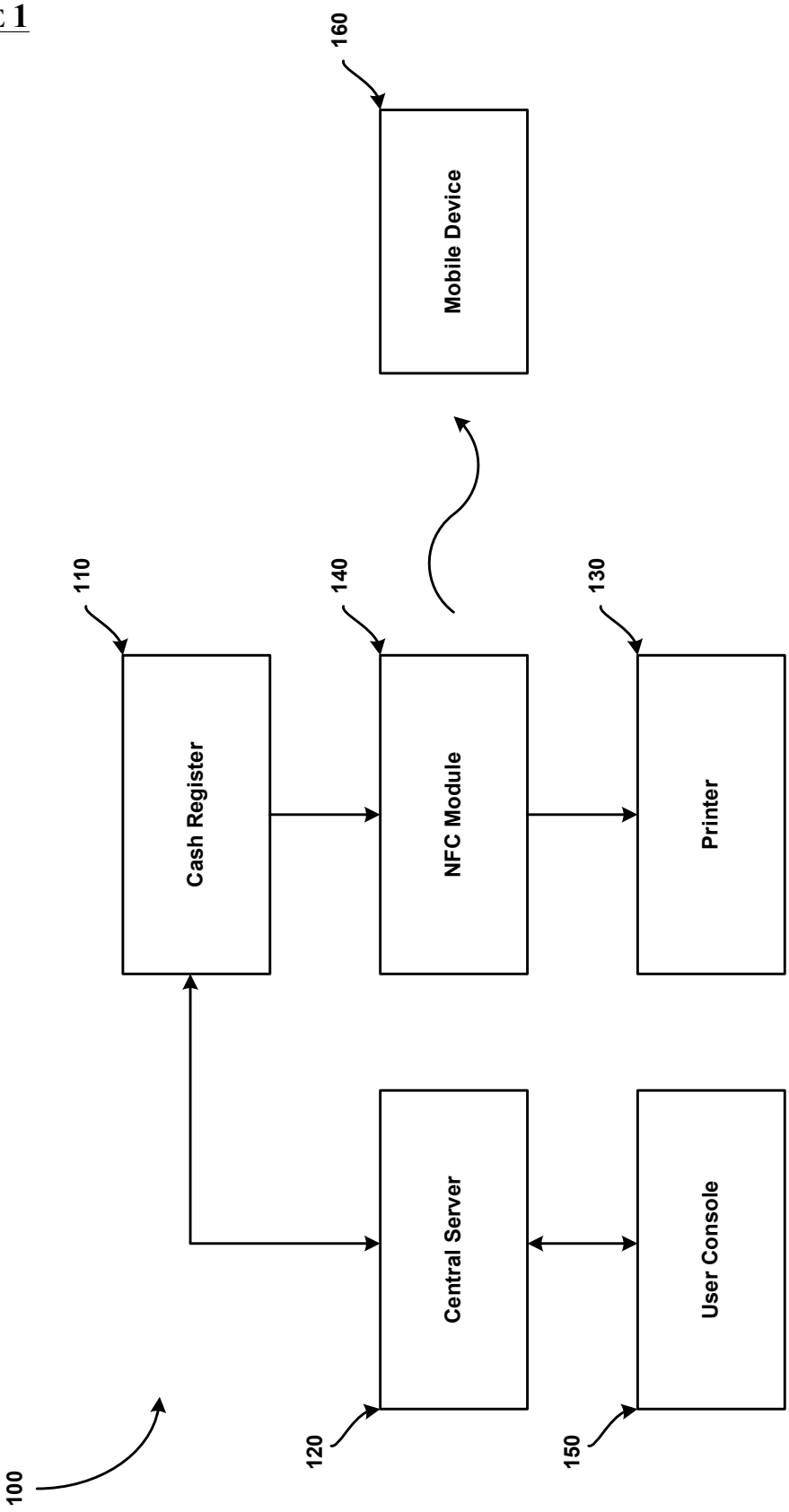
160
Mobile Device
110
140
130
Cash Register
NFC Module
Printer
Central Server
User Console
100
120
150

FIGURE 2

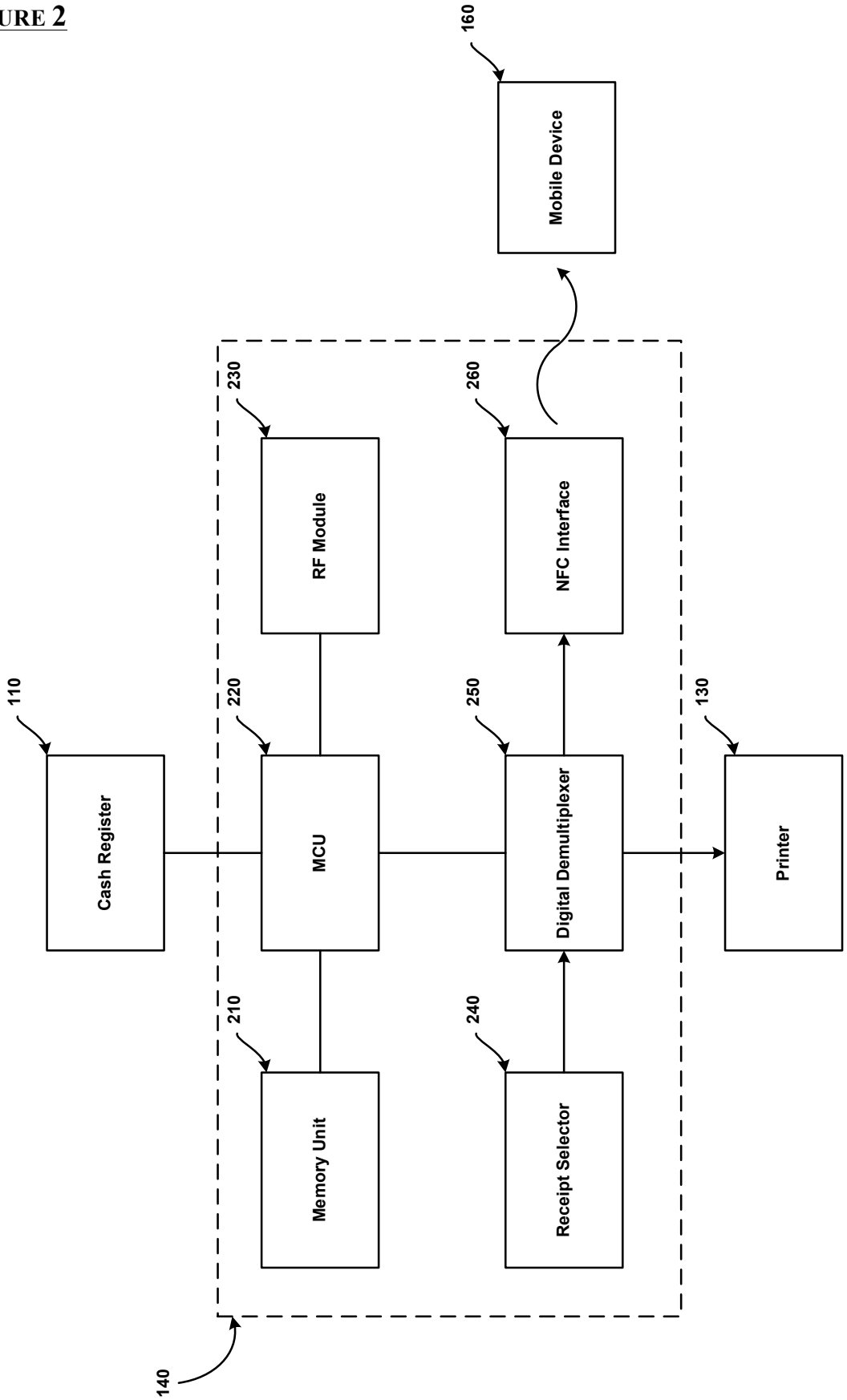
160
Mobile Device
230
RF Module
260
NFC Interface
110
Cash Register
220
MCU
250
Digital Demultiplexer
130
Printer
210
Memory Unit
240
Receipt Selector
140

FIGURE 3

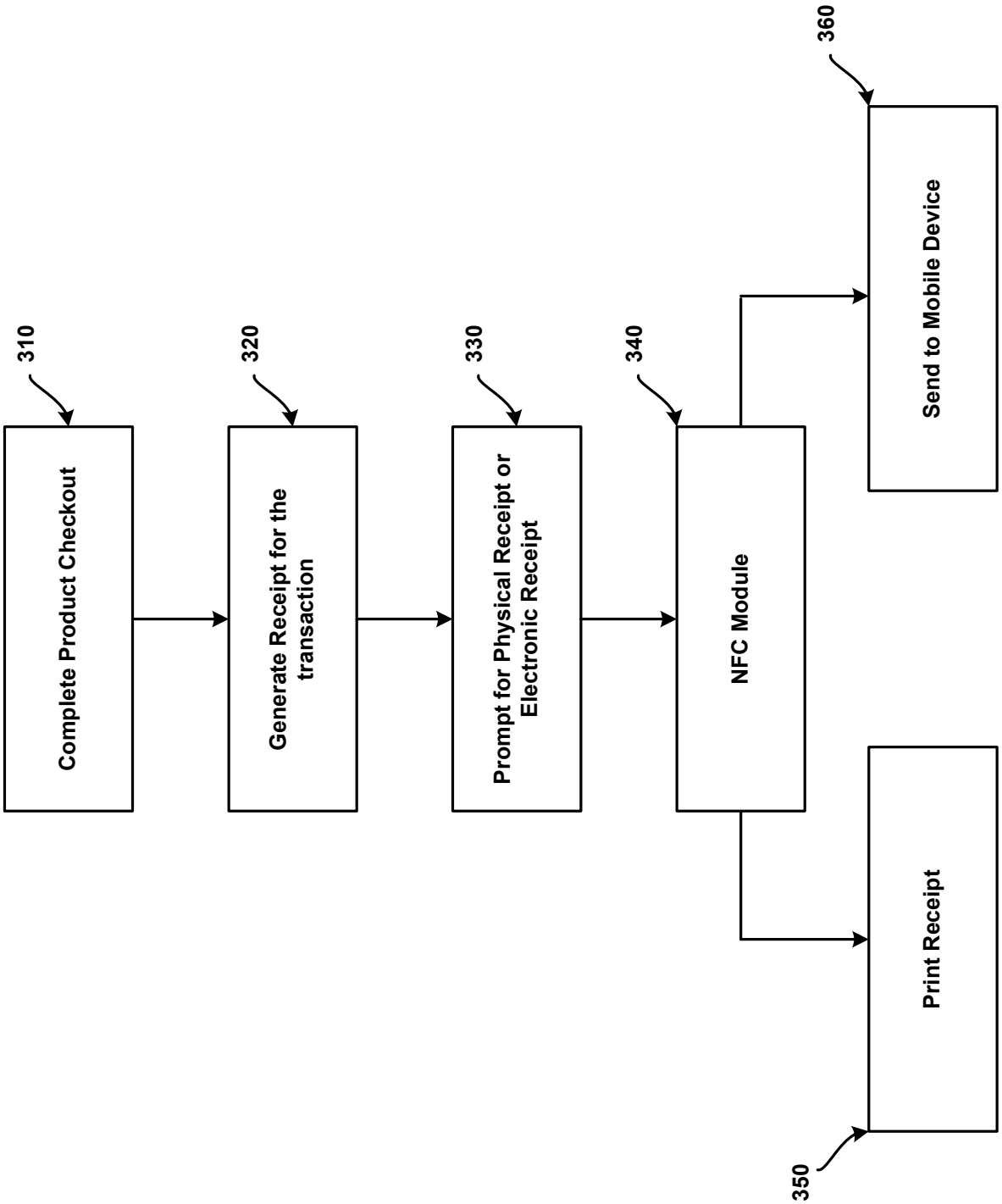
310
Complete Product Checkout
320
Generate Receipt for the transaction
330
Prompt for Physical Receipt or Electronic Receipt
340
NFC Module
360
Send to Mobile Device
350
Print Receipt